1	AAC7D1	(1)
2	AACR25813	(1)
3	AAC8SH-.5A	(1)
4	XXX	
5	AAV125B	(1)
6	AA198-5102	(1)
7	1975-213	(2)
8	1975-213B	(1)
9	AA2000F-03	(3)
10	AA3000F-07	(1)
11	AAVSQE1	(3)
12	MMU002A	(3)
13	AAQME-5-10	(5)
14	AAQME-5-8	(4)
15	AAQME-4-8	(1)
16	AAQMT-3-4	(1)
17	AAQMT-4-8	(2)
18	AAQPR-3-4	(2)
19	AAQPR-5-4	(2)
20	AAQMC-4-8	(4)
21	AAQMC-5-10	(1)
22	AAQUY-5-4	(2)
23	AAQUY-4-4	(2)
24	AAQUY-5-5	(2)
25	AAQBC-3-3	(1)

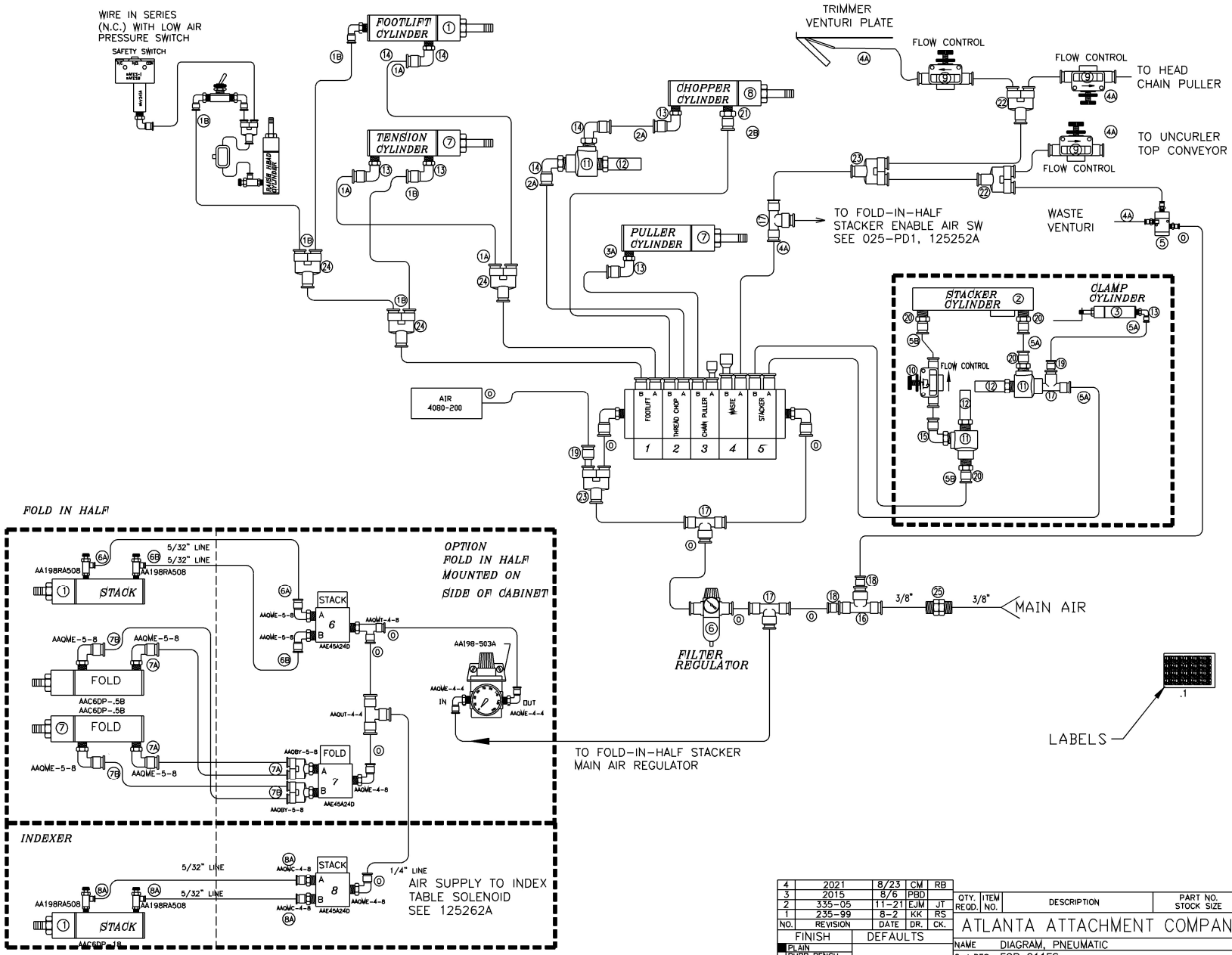

RED = 5/32 AIRLINE
WHITE = 1/4 AIRLINE
MAGENTA = 3/8 AIRLINE

NO.	REVISION	DATE	DR.	CK.
4	2021	8/23	CM	RB
3	2015	8/6	PBD	
2	335-05	11-21	EJM	JT
1	235-99	8-2	KK	RS

FINISH	DEFAULTS
■ PLAIN	
BURR BENCH	
BLACKOXIDE	
HEAT TREAT	
SAND BLAST	
BUFF	
PAINT TAN	
CHROMATE	
TIMESAVE	
OIL	

088-99

QTY. REQD.	ITEM NO.	DESCRIPTION	PART NO. STOCK SIZE

ATLANTA ATTACHMENT COMPANY

NAME DIAGRAM, PNEUMATIC
2nd DES. FOR 211ES
MATERIAL .
ASSEMBLY 211-205 PART NO. 211ES-PD1
DES. BY DVM0016
DR. BY DONNA WILLIS
CK. BY ROBERT SIDERS
DRAWING NO. 125456C REV 4
SCALE 1/1.5 DATE:3-12-99 MACH CL .

The materials contained herein are confidential and proprietary information of Atlanta Attachment Company. In addition to any confidentiality and non-disclosure obligations that currently exist between you and Atlanta Attachment Company, your use of these materials serves as an acknowledgment of the confidential and proprietary nature of these materials and your duty not to make any unauthorized use or disclosure of these materials.