POWER TO CONTROL CABINET MUST BE PROTECTED WITH AN UL489 LISTED CIRCUIT BREAKER
240V AC 40 AMPS

CONNECT INCOMMING POWER SO ONLY GREEN LAMP IS LIT IF MOTORS RUN BACKWARDS, SWAP L2,L3 ON BOTH INCOMMING POWER AND AT PHASE MONITOR

SET RANGE TO 10S
SET TIME TO .15 SEC

SET TO LEFT POSITION
SET TO 12 O'CLOCK POSITION
SET TO 2 O'CLOCK POSITION

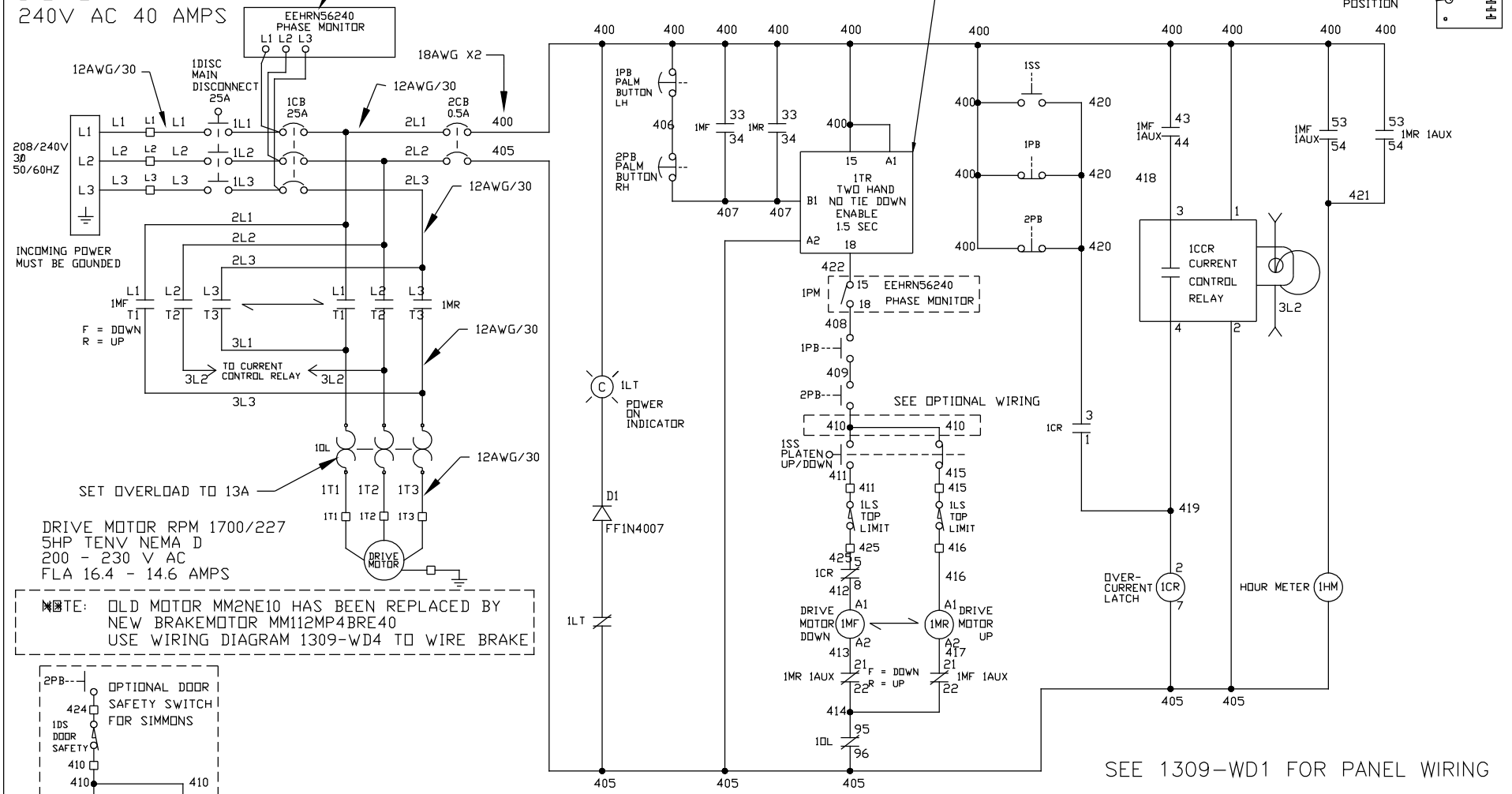

DRIVE MOTOR RPM 1700/227
5HP TENV NEMA D
200 - 230 V AC
FLA 16.4 - 14.6 AMPS

NOTE: OLD MOTOR MM2NE10 HAS BEEN REPLACED BY NEW BRAKEMOTOR MM112MP4BRE40 USE WIRING DIAGRAM 1309-WD4 TO WIRE BRAKE

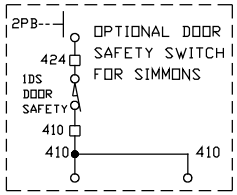

SEE 1309-WD1 FOR PANEL WIRING

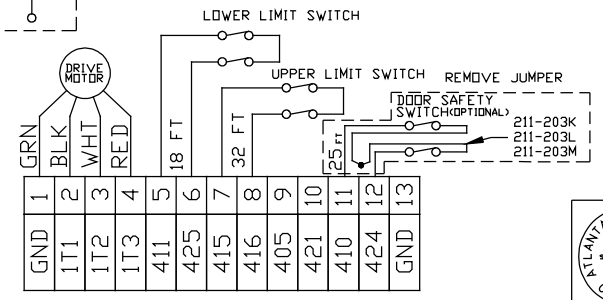

046-06

NO.	REVISION	DATE	DR.	CK.
4	2013	12/12	PD	EJM

FINISH: PLAIN, BURR BENCH, BLACKOXIDE, HEAT TREAT, SAND BLAST, BUFF, PAINT TAN, CHROMATE, TIMESAVE, OIL, CLEAR CHROMATE, DESTINATION

DEFAULTS

COUNTERSINKS: .02

SHEET METAL FAB
.X = ± .100
.XX = ± .050
.XXX = ± .015
.XXXX = AS SPECIFIED

QTY. REQD.	ITEM NO.	DESCRIPTION	PART NO. STOCK SIZE

ATLANTA ATTACHMENT COMPANY

NAME WIRING SCHEMATIC, UNBALER
2nd DES. 11309
MATERIAL
ASSEMBLY 11309 PART NO. 1309-WD
DES. BY SSR 1309-WD
DR. BY S. Ruderman
CK. BY JEFF THOMAS
DRAWING NO. 125343A
REV 4
SCALE: 1/1 DATE: 03-09-06 MACH CL X

The materials contained herein are confidential and proprietary information of Atlanta Attachment Company. In addition to any confidentiality and non-disclosure obligations that currently exist between you and Atlanta Attachment Company, your use of these materials serves as an acknowledgment of the confidential and proprietary nature of these materials and your duty not to make any unauthorized use or disclosure of these materials.

POWER TO CONTROL CABINET
MUST BE PROTECTED WITH
AN UL489 LISTED CIRCUIT
BREAKER
240V AC 40 AMPS

IF MOTORS RUN BACKWARDS, SWAP L2,L3 ON BOTH INCOMMING POWER AND AT PHASE MONITOR

EEHRN56240 PHASE MONITOR
L1 L2 L3

12AWG/30

1DISC MAIN DISCONNECT 25A

18AWG X2

1CB 25A

2CB 0.5A

208/240V 3Ø 50/60HZ

INCOMING POWER MUST BE GOUNDED

1MF

1MR

F = DOWN
R = UP

TO CURRENT CONTROL RELAY

SET OVERLOAD TO 13A

1OL

DRIVE MOTOR

DRIVE MOTOR RPM 1700/227
5HP TENV NEMA D
200 - 230 V AC
FLA 16.4 - 14.6 AMPS

NOTE: OLD MOTOR MM2NE10 HAS BEEN REPLACED BY NEW BRAKEMOTOR MM112MP4BRE40 USE WIRING DIAGRAM 1309-WD4 TO WIRE BRAKE

2PB
OPTIONAL DOOR SAFETY SWITCH FOR SIMMONS
1DS DOOR SAFETY

SET RANGE TO 10S
SET TIME TO .15 SEC

1PB PALM BUTTON LH

2PB PALM BUTTON RH

1TR TWO HAND NO TIE DOWN ENABLE 1.5 SEC

1LT POWER ON INDICATOR

D1 FF1N4007

1LT

1SS

1PB

2PB

1PM EEHRN56240 PHASE MONITOR

SEE OPTIONAL WIRING

1SS PLATEN UP/DOWN

1LS TOP LIMIT

1CR

DRIVE MOTOR DOWN 1MF

DRIVE MOTOR UP 1MR

1MR 1AUX

1MF 1AUX

F = DOWN
R = UP

1OL

1CCR CURRENT CONTROL RELAY

3L2

OVER-CURRENT LATCH 1CR

HOUR METER 1HM

POSITION
SET TO 12 O'CLOCK POSITION
SET TO 2 O'CLOCK POSITION

SEE 1309-WD1 FOR PANEL WIRING

LOWER LIMIT SWITCH

UPPER LIMIT SWITCH

REMOVE JUMPER

DOOR SAFETY SWITCH(OPTIONAL)

211-203K
211-203L
211-203M

DRIVE MOTOR

GRN BLK WHT RED

18 FT

32 FT

25 FT

1	2	3	4	5	6	7	8	9	10	11	12	13
GND	1T1	1T2	1T3	411	425	415	416	405	421	410	424	GND

ATLANTA ATTACHMENT COMPANY THE SUDDEN SERVICE COMPANY

046-06

NO.	REVISION	DATE	DR.	CK.
4	2013	12/12	PD	EJM

FINISH
- PLAIN
- BURR BENCH
- BLACKOXIDE
- HEAT TREAT
- SAND BLAST
- BUFF
- PAINT TAN
- CHROMATE
- TIMESAVE
- OIL
- CLEAR CHROMATE
- DESTINATION

DEFAULTS

COUNTERSINKS: .02

SHEET METAL FAB

.X = ± .100
.XX = ± .050
.XXX = ± .015
.XXXX = AS SPECIFIED

QTY. REQD.	ITEM NO.	DESCRIPTION	PART NO. STOCK SIZE

ATLANTA ATTACHMENT COMPANY

NAME WIRING SCHEMATIC, UNBALER
2nd DES. 11309
MATERIAL
ASSEMBLY 11309 PART NO. 1309-WD
DES. BY SSR 1309-WD
DR. BY S. Ruderman
CK. BY JEFF THOMAS
DRAWING NO. 125343A
REV 4
SCALE: 1/1 DATE: 03-09-06 MACH CL X

The materials contained herein are confidential and proprietary information of Atlanta Attachment Company. In addition to any confidentiality and non-disclosure obligations that currently exist between you and Atlanta Attachment Company, your use of these materials serves as an acknowledgment of the confidential and proprietary nature of these materials and your duty not to make any unauthorized use or disclosure of these materials.