海外講習会用121213 LU-2810(-7)_EM

JUKI®

Direct-drive, 1-Needle, Unison-feed Lockstitch Machine with a Vertical-axis Large Hook

# LU-2810

Direct-drive, 1-Needle, Unison-feed Lockstitch Machine with a Vertical-axis Large Hook with an Automatic Thread Trimmer

# LU-2810-7

# ENGINEER'S MANUAL

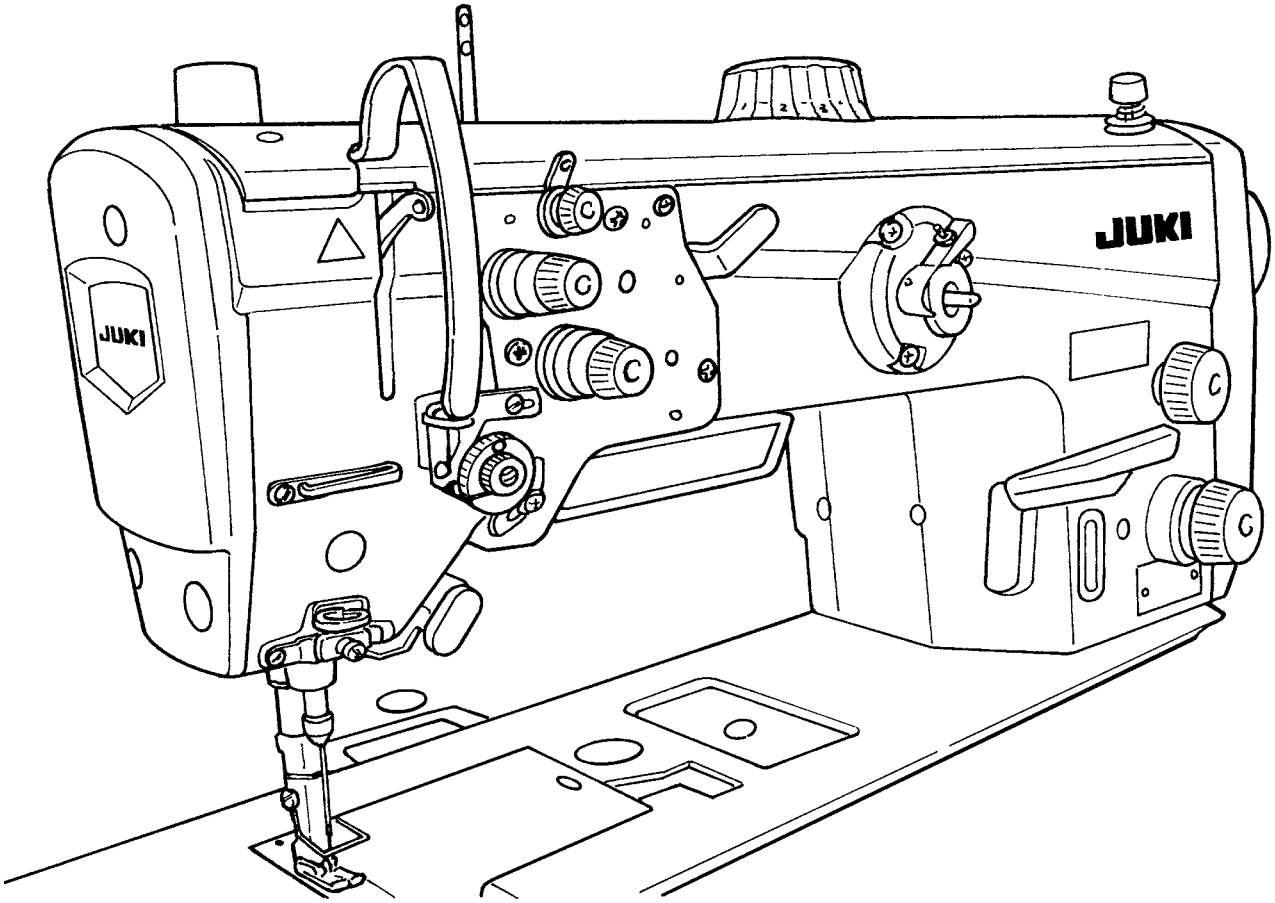


40133310
No. E407-00

# PREFACE

This Engineer's Manual is written for the technical personnel who are responsible for the service and maintenance of the machine.
The Instruction Manual for these machines intended for the maintenance personnel and operators at an apparel factory contains operating instruction in detail. And this manual describes "Standard Adjustment", "Adjustment Procedures", "Results of Improper Adjustment", and other important information which are not covered in the Instruction Manual.
When carrying out the maintenance work on the sewing machine, be sure to refer also to the Instruction Manual and the Parts List.
In addition, for the motor for the sewing machine with thread trimmer, refer to the separate Instruction Manual or This manual gives the "Standard Adjustment" on the former page under which the most basic adjustment value is described, and on the latter page "Results of Improper Adjustment" under which stitching errors and troubles arising from mechanical failures and "How to adjust" are described.

# TO ENSURE SAFE USE OF YOUR SEWING MACHINE

**Adjustment :**
**It means replacement of parts, disassembly, and repair assembly.**

For the sewing machine, automatic machine and ancillary devices (hereinafter collectively referred to as "machine"), it is inevitable to conduct sewing work near moving parts of the machine. This means that there is always a possibility of unintentionally coming in contact with the moving parts. Operators who actually operate the machine and maintenance personnel who are involved in maintenance and repair of the machine are strongly recommended to carefully read to fully understand the following **Safety precautions** of this engineer's manual before using/maintaining the machine. The content of the **Safety precautions** of this engineer's manual includes items which are not contained in the specifications of your product.
The risk indications are classified into the following three different categories to help understand the meaning of the labels of this engineer's manual and the product. Be sure to fully understand the following description and strictly observe the instructions.

## (Ⅰ) Explanation of risk levels

| | |
|---|---|
| | **DANGER :** This indication is given where there is an immediate danger of death or serous injury if the person in charge or any third party mishandles the machine or does not avoid the dangerous situation when operating or maintaining the machine. |
| | **WARNING :** This indication is given where there is a potentiality for death or serious injury if the person in charge or any third party mishandles the machine or does not avoid the dangerous situation when operating or maintaining the machine. |
| | **CAUTION :** This indication is given where there is a danger of medium to minor injury if the person in charge or any third party mishandles the machine or does not avoid the dangerous situation when operating or maintaining the machine. |
| | **Items requiring special attention** |

## (Ⅱ) Explanation of pictorial warning indications and warning labels

| | | | | | |
|---|---|---|---|---|---|
| Pictorial warning indication | | There is a risk of injury if contacting a moving section. | Pictorial warning indication | | Be aware that holding the sewing machine during operation can hurt your hands. |
| | | There is a risk of electrical shock if contacting a high-voltage section. | | | There is a risk of entanglement in the belt resulting in injury. |
| | | There is a risk of a burn if contacting a high-temperature section. | | | There is a risk of injury if you touch the button carrier. |
| | | Be aware that eye deficiency can be caused by looking directly at the laser beam. | Indication label | | The correct direction is indicated. |
| | | There is a risk of contact between your head and the sewing machine. | | | Connection of a earth cable is indicated. |

**Warning label**

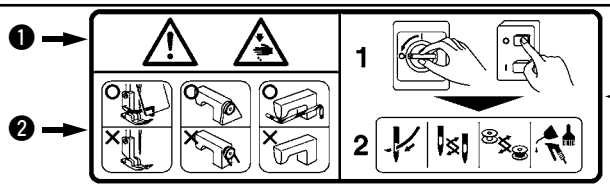


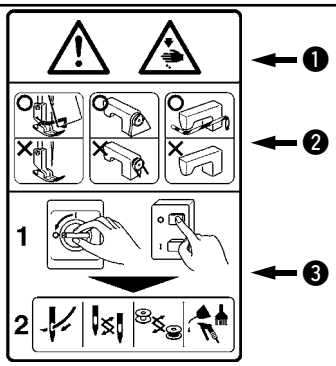


❶ ・There is the possibility that slight to serious injury or death may be caused.
・There is the possibility that injury may be caused by touching moving part.

❷ ・To perform sewing work with safety guard.
・To perform sewing work with safety cover.
・To perform sewing work with safety protection device.

❸ ・Be sure to turn the power OFF before carrying out "machine-head threading," "needle changing," "bobbin changing" or "oiling and cleaning.

**Electrical-shock danger label**

| | ⚠危 険 | ⚠DANGER |
|---|---|---|
| | 高電圧部分に触れて、大けがをすることがある。<br>電源を切って、5分以上たってからカバーをはずすこと。 | Hazardous voltage will cause injury.<br>Turn off main switch and unplug power cord and wait at least 5 minutes before opening this cover. |

# SAFETY PRECAUTIONS

Accident means "to cause personal injury or death or damage to property."

## DANGER

1. When it is necessary to open the control box containing electrical parts, be sure to turn the power off and wait for five minutes or more before opening the cover in order to prevent accident leading to electrical shock.

## CAUTION

### Basic precaution

1. Be sure to read the engineer's manual and other explanatory documents supplied with accessories of the machine before using the machine. Carefully keep the engineer's manual and the explanatory documents at hand for quick reference.
2. The content of this section includes items which are not contained in the specifications of your product.
3. Be sure to wear safety goggles to protect against accident caused by needle breakage.
4. Those who use a heart pacer have to use the machine after consultation with a medical specialist.
5. Turn OFF the power before starting the work in order to protect against accident that can result in personal injury.
   If it is inevitable to carry out work with the power ON, utmost care should be taken to prevent from depressing the foot pedal or pressing the start switch by mistake.
6. Make sure, after the completion of replacement work, that neither connectors nor cables are damaged, slipped off or loosened in order to protect against accident that can result in personal injury.

### Safety devices and warning labels

1. Be sure to operate the machine after verifying that safety device(s) is correctly installed in place and works normally in order to prevent accident caused by lack of the device(s).
2. If any of the safety devices is removed, be sure to replace it and verify that it works normally in order to prevent accident that can result in personal injury or death.
3. Be sure to keep the warning labels adhered on the machine clearly visible in order to prevent accident that can result in personal injury or death. If any of the labels has stained or come unstuck, be sure to change it with a new one.

### Application and modification

1. Never use the machine for any application other than its intended one and in any manner other than that prescribed in the engineer's manual in order to prevent accident that can result in personal injury or death. JUKI assumes no responsibility for damages or personal injury or death resulting from the use of the machine for any application other than the intended one.
2. Never modify and alter the machine in order to prevent accident that can result in personal injury or death. JUKI assumes no responsibility for damages or personal injury or death resulting from the machine which has been modified or altered.

### Education and training

1. In order to prevent accident resulting from unfamiliarity with the machine, the machine has to be used only by the operator who has been trained/educated by the employer with respect to the machine operation and how to operate the machine with safety to acquire adequate knowledge and operation skill. To ensure the above, the employer has to establish an education/training plan for the operators and educate/train them beforehand.

### Items for which the power to the machine has to be turned off

Turning the power off: Turning the power switch off, then removing the power plug from the outlet. This applies to the following.

1. Be sure to immediately turn the power off if any abnormality or failure is found or in the case of power failure in order to protect against accident that can result in personal injury or death.
2. To protect against accident resulting from abrupt start of the machine, be sure to carry out the following operations after turning the power off. For the machine incorporating a clutch motor, in particular, be sure to carry out the following operations after turning the power off and verifying that the machine stops completely.
   2-1. For example, threading the parts such as the needle, looper, spreader etc. which have to be threaded, or changing the bobbin.
   2-2. For example, changing or adjusting all component parts of the machine.
   2-3. For example, when inspecting, repairing or cleaning the machine or leaving the machine.
3. Be sure to remove the power plug by holding the plug section instead of the cord section in order to prevent electrical-shock, earth-leakage or fire accident.
4. Be sure to turn the power off whenever the machine is left unattended between works.
5. Be sure to turn the power off in the case of power failure in order to prevent accident resulting of breakage of electrical components.

## PRECAUTIONS TO BE TAKEN IN VARIOUS OPERATION STAGES

## Transportation

1. Be sure to lift and move the machine in a safe manner taking the machine weight in consideration. Refer to the text of the engineer's manual for the mass of the machine.
2. Be sure to take sufficient safety measures to prevent falling or dropping before lifting or moving the machine in order to protect against accident that can result in personal injury or death.
3. Once the machine has been unpacked, never re-pack it for transportation to protect the machine against breakage resulting from unexpected accident or dropping.

## Unpacking

1. Be sure to unpack the machine in the prescribed order in order to prevent accident that can result in personal injury or death. In the case the machine is crated, in particular, be sure to carefully check nails. The nails have to be removed.
2. Be sure to check the machine for the position of its center of gravity and take it out from the package carefully in order to prevent accident that can result in personal injury or death.

## Installation

### (Ⅰ) Table and table stand

1. Be sure to use JUKI genuine table and table stand in order to prevent accident that can result in personal injury or death. If it is inevitable to use a table and table stand which are not JUKI genuine ones, select the table and table stand which are able to support the machine weight and reaction force during operation.
2. If casters are fitted to the table stand, be sure to use the casters with a locking mechanism and lock them to secure the machine during the operation, maintenance, inspection and repair in order to prevent accident that can result in personal injury or death.

### (Ⅱ) Cable and wiring

1. Be sure to prevent an extra force from being applied to the cable during the use in order to prevent electrical-shock, earth-leakage or fire accident. In addition, if it is necessary to cable near the operating section such as the V-belt, be sure to provide a space of 30 mm or more between the operating section and the cable.
2. Be sure to avoid starburst connection in order to prevent electrical-shock, earth-leakage or fire accident.
3. Be sure to securely connect the connectors in order to prevent electrical-shock, earth-leakage or fire accident. In addition, be sure to remove the connector while holding its connector section.

### (Ⅲ) Grounding

1. Be sure to have an electrical expert install an appropriate power plug in order to prevent accident caused by earth-leakage or dielectric strength voltage fault. In addition, be sure to connect the power plug to the grounded outlet without exceptions.
2. Be sure to ground the earth cable in order to prevent accident caused by earth leakage.

### (Ⅳ) Motor

1. Be sure to use the specified rated motor (JUKI genuine product) in order to prevent accident caused by burnout.
2. If a commercially available clutch motor is used with the machine, be sure to select one with an entanglement preventive pulley cover in order to protect against being entangled by the V-belt.

## Before operation

1. Be sure to make sure that the connectors and cables are free from damage, dropout and looseness before turning the power on in order to prevent accident resulting in personal injury or death.
2. Never put your hand into the moving sections of the machine in order to prevent accident that can result in personal injury or death.
   In addition, check to be sure that the direction of rotation of the pulley agrees with the arrow shown on pulley.
3. If the table stand with casters is used, be sure to secure the table stand by locking the casters or with adjusters, if provided, in order to protect against accident caused by abrupt start of the machine.

## During operation

1. Be sure not to put your fingers, hair or clothing close to the moving sections such as the handwheel, hand pulley and motor or place something near those sections while the machine is in operation in order to prevent accident caused by entanglement that can result in personal injury or death.
2. Be sure not to place your fingers near the surround area of the needle or inside the thread take-up lever cover when turning the power on or while the machine is in operation in order to prevent accident that can result in personal injury or death.
3. The machine runs at a high speed. Never bring your hands near the moving sections such as looper, spreader, needle bar, hook and cloth trimming knife during operation in order to protect your hands against injury. In addition, be sure to turn the power off and check to be sure that the machine completely stops before changing the thread.
4. Be careful not to allow your fingers or any other parts of your body to be caught between the machine and table when removing the machine from or replacing it on the table in order to prevent accident that can result in personal injury or death.
5. Be sure to turn the power off and check to be sure that the machine and motor completely stop before removing the belt cover and V-belt in order to prevent accident caused by abrupt start of the machine or motor.
6. If a servomotor is used with the machine, the motor does not produce noise while the machine is at rest. Be sure not to forget to turn the power off in order to prevent accident caused by abrupt start of the motor.
7. Never use the machine with the cooling opening of the motor power box shielded in order to prevent fire accident by overheat.

## Lubrication

1. Be sure to use JUKI genuine oil and JUKI genuine grease to the parts to be lubricated.
2. If the oil adheres on your eye or body, be sure to immediately wash it off in order to prevent inflammation or irritation.
3. If the oil is swallowed unintentionally, be sure to immediately consult a medical doctor in order to prevent diarrhea or vomiting.

## Maintenance

1. In prevention of accident caused by unfamiliarity with the machine, repair and adjustment has to be carried out by a service technician who is thoroughly familiar with the machine within the scope defined in the engineer's manual. Be sure to use JUKI genuine parts when replacing any of the machine parts. JUKI assumes no responsibility for any accident caused by improper repair or adjustment or the use of any part other than JUKI genuine one.
2. In prevention of accident caused by unfamiliarity with the machine or electrical-shock accident, be sure to ask an electrical technician of your company or JUKI or distributor in your area for repair and maintenance (including wiring) of electrical components.
3. When carrying out repair or maintenance of the machine which uses air-driven parts such as an air cylinder, be sure to remove the air supply pipe to expel air remaining in the machine beforehand, in order to prevent accident caused by abrupt start of the air-driven parts.
4. Be sure to check that screws and nuts are free from looseness after completion of repair, adjustment and part replacement.
5. Be sure to periodically clean up the machine during its duration of use. Be sure to turn the power off and verify that the machine and motor stop completely before cleaning the machine in order to prevent accident caused by abrupt start of the machine or motor.
6. Be sure to turn the power off and verify that the machine and motor stop completely before carrying out maintenance, inspection or repair of the machine. (For the machine with a clutch motor, the motor will keep running for a while by inertia even after turning the power off. So, be careful.)
7. If the machine cannot be normally operated after repair or adjustment, immediately stop operation and contact JUKI or the distributor in your area for repair in order to prevent accident that can result in personal injury or death.
8. If the fuse has blown, be sure to turn the power off and eliminate the cause of blowing of the fuse and replace the blown fuse with a new one in order to prevent accident that can result in personal injury or death.
9. Be sure to periodically clean up the air vent of the fan and inspect the area around the wiring in order to prevent fire accident of the motor.
10. In order to prevent accidents resulting in personal injury or death, adjustments have to be carried out within the instructions described in this Engineer's Manual and in the Instruction Manual by the personnel who have been well trained by the employer with respect to the latest knowledge and safety for the machine.
11. Make sure that water is contained in cylinders and pipes, then remove water from them in order to prevent accidents due to a malfunction of the machine.

## Operating environment

1. Be sure to use the machine under the environment which is not affected by strong noise source (electromagnetic waves) such as a high-frequency welder in order to prevent accident caused by malfunction of the machine.
2. Never operate the machine in any place where the voltage fluctuates by more than "rated voltage ±10 %" in order to prevent accident caused by malfunction of the machine.
3. Be sure to verify that the air-driven device such as an air cylinder operates at the specified air pressure before using it in order to prevent accident caused by malfunction of the machine.
4. To use the machine with safety, be sure to use it under the environment which satisfies the following conditions:
   Ambient temperature during operation 5°C to 35°C
   Relative humidity during operation 35 % to 85 %
5. Dew condensation can occur if bringing the machine suddenly from a cold environment to a warm one. So, be sure to turn the power on after having waited for a sufficient period of time until there is no sign of water droplet in order to prevent accident caused by breakage or malfunction of the electrical components.
6. Be sure to stop operation when lightning flashes for the sake of safety and remove the power plug in order to prevent accident caused by breakage or malfunction of the electrical components.
7. Depending on the radio wave signal condition, the machine may generate noise in the TV or radio. If this occurs, use the TV or radio with kept well away from the machine.
8. In order to ensure the work environment, local laws and regulations in the country where the sewing machine is installed shall be followed.
   In the case the noise control is necessary, an ear protector or other protective gear should be worn according to the applicable laws and regulations.
9. Disposal of products and packages and treatment of used lubricating oil should be carried out properly according to the relevant laws of the country in which the sewing machine is used.

# PRECAUTIONS TO BE TAKEN IN VARIOUS OPERATION STAGES

## Mechanical components

**CAUTION**

### Transportation

1. Be sure to lift this machine with four or more workers and use a carriage for moving it in order to prevent personal injury.
2. Be sure to take sufficient safety measures to prevent falling or dropping before lifting or moving the machine in order to protect against accident that can result in personal injury or death.
3. Installation is described in the Instruction Manual. Be sure to fully understand the description before putting the machine into operation.

### Replacement of parts

1. In prevention of accident that can result in personal injury, be sure to carry out disassembly/assembly work within the specified range given in this Engineer's Manual and in the Instruction Manual.
2. Turn OFF the power before starting the work in order to protect against accident that can result in personal injury.
   If it is inevitable to carry out work with the power ON, utmost care should be taken to prevent from depressing the foot pedal or pressing the start switch by mistake.
3. Be sure to carry out replacement work after having installed the machine in a stable state in order to protect against accident that can result in personal injury.
   In addition, be sure to select appropriate tools.
4. In prevention of accident that can result in personal injury, make sure, after the completion of adjustment work, that neither screws nor nuts are loosened or come in contact with other parts.
5. Be sure to use JUKI genuine parts when replacing any of the machine parts.
   JUKI assumes no responsibility for any accident caused by any part other than JUKI genuine one.
   In addition, in the event you cannot replace parts within the specified range, immediately stop the replacement work and ask JUKI or distributor in your area for replacement of the parts.

### Adjustment

1. Be sure to adjust according to the instructions given in this Engineer's Manual and in the Instruction Manual in order to protect against accident that can result in personal injury.
2. Be sure to carry out replacement work after having installed the machine in a stable state in order to protect against accident that can result in personal injury.
   In addition, be sure to select appropriate tools.
3. In prevention of accident that can result in personal injury, make sure, after the completion of adjustment work, that neither screws nor nuts are loosened or come in contact with other parts.
4. Turn OFF the power before starting the work in order to protect against accident that can result in personal injury.
   If it is inevitable to carry out work with the power ON, utmost care should be taken to prevent from depressing the foot pedal or pressing the start switch by mistake.
5. In prevention of accident that can result in personal injury or entanglement accident, be sure to ensure safety at the time of test run. In addition, be sure to take care not to allow hair or cloths to come in contact with the machine belt.

### Disassembly/assembly

1. In prevention of accident that can result in personal injury, be sure to carry out disassembly/assembly work within the specified range given in this Engineer's Manual and in the Instruction Manual.
2. Be sure to carry out replacement work after having installed the machine in a stable state in order to protect against accident that can result in personal injury.
   In addition, be sure to select appropriate tools.
3. In prevention of accident that can result in personal injury, make sure, after the completion of adjustment work, that neither screws nor nuts are loosened or come in contact with other parts.
4. In prevention of accident that can result in personal injury, be sure to tighten screws and nuts in assembly work with a specified torque, if specified, or with an appropriate torque, if not specified.
   After the completion of assembly work, be sure to check that screws and nuts are not loosened before starting test run.
5. In prevention of accident that can result in personal injury, be sure to check whether the direction of rotation is correct at the time of test run.
6. In prevention of accident that can result in personal injury or entanglement accident, be sure to ensure safety at the time of test run. In addition, be sure to take care not to allow hair or cloths to come in contact with the machine belt.

# PRECAUTIONS TO BE TAKEN IN VARIOUS OPERATION STAGES

## Electrical components

**CAUTION**

### Transportation

1. Be sure to lift this machine with four or more workers and use a carriage for moving it in order to prevent personal injury.
2. Be sure to take sufficient safety measures to prevent falling or dropping before lifting or moving the machine in order to protect against accident that can result in personal injury or death.
3. Installation is described in the Instruction Manual. Be sure to fully understand the description before putting the machine into operation.

### Replacement of parts

1. In prevention of accident caused by unfamiliarity with the machine or electrical-shock accident, be sure to ask an electrical technician of your company or JUKI or distributor in your area for replacement of electrical components.
2. When it is necessary to open the control box containing electrical parts, be sure to turn the power off and wait for five minutes or more before opening the cover in order to prevent accident caused by unfamiliarity with the machine or electrical-shock accident. In addition, do not carry out replacement work with wet hands in order to prevent electrical-shock accident.
3. Be sure to replace parts according to the instructions given in this Engineer's Manual and in the Instruction Manual in order to protect against accident that can result in personal injury.
4. Be sure to carry out replacement work after having installed the machine in a stable state in order to protect against accident that can result in personal injury.
   In addition, be sure to select appropriate tools.
5. Make sure, after the completion of replacement work, that there is no loose soldering, no contact with other parts, inadequate contact between connectors and receptacles, and loose screws/nuts in order to protect against accident that can result in personal injury.
6. Make sure, after the completion of replacement work, that neither connectors nor cables are damaged, slipped off or loosened in order to protect against accident that can result in personal injury.
   It should be remembered that some parts have been factory-insulated with tubes or tapes, or floated above the PWB for safety's sake. In addition, internal wiring has been factory-routed or -clamped in such a way that it does not come close to high-voltage parts. Be sure to re-place those parts as they are at the time of delivery.
7. Be sure to use JUKI genuine parts when replacing any of the machine parts.
   JUKI assumes no responsibility for any accident caused by any part other than JUKI genuine one.
   In addition, in the event you cannot replace parts within the specified range, immediately stop the replacement work and ask JUKI or distributor in your area for replacement of the parts.
8. If the fuse has blown, be sure to turn the power off and eliminate the cause of blowing of the fuse and replace the blown fuse with a new one in order to prevent accident that can result in personal injury or death.

### Adjustment

1. In prevention of accident caused by unfamiliarity with the machine or electrical-shock accident, be sure to ask an electrical technician of your company or JUKI or distributor in your area for adjustment of electrical components.
2. When it is necessary to open the control box containing electrical parts, be sure to turn the power off and wait for five minutes or more before opening the cover in order to prevent accident caused by unfamiliarity with the machine or electrical-shock accident. In addition, do not carry out adjustment work with wet hands in order to prevent electrical-shock accident.
3. In prevention of accident that can result in personal injury, adjust adjustment variable resistor or the like installed on PWB within the specified range given in this Engineer's Manual and in the Instruction Manual.
4. Be sure to carry out replacement work after having installed the machine in a stable state in order to protect against accident that can result in personal injury.
   In addition, be sure to select appropriate tools.
5. In prevention of accident that can result in personal injury, make sure, after the completion of adjustment work, that neither screws nor nuts are loosened or come in contact with other parts.
6. Make sure, after the completion of replacement work, that neither connectors nor cables are damaged, slipped off or loosened in order to protect against accident that can result in personal injury.
7. In prevention of accident that can result in personal injury or entanglement accident, be sure to ensure safety at the time of test run. In addition, be sure to take care not to allow hair or cloths to come in contact with the machine belt.

### Disassembly/assembly

1. In prevention of accident that can result in personal injury, be sure to carry out disassembly/assembly work within the specified range given in this Engineer's Manual and in the Instruction Manual.

2. In prevention of accident caused by unfamiliarity with the machine or electrical-shock accident, be sure to ask an electrical technician of your company or JUKI or distributor in your area for disassembly/assembly of electrical components.
3. When it is necessary to open the control box containing electrical parts, be sure to turn the power off and wait for five minutes or more before opening the cover in order to prevent accident caused by unfamiliarity with the machine or electrical-shock accident. In addition, do not carry out disassembly/assembly work with wet hands in order to prevent electrical-shock accident.
4. Be sure to carry out replacement work after having installed the machine in a stable state in order to protect against accident that can result in personal injury.
   In addition, be sure to select appropriate tools.
5. In prevention of accident that can result in personal injury, be sure to tighten screws and nuts in assembly work with a specified torque, if specified, or with an appropriate torque, if not specified.
   After the completion of assembly work, be sure to check that screws and nuts are not loosened before starting test run.
6. In prevention of accident that can result in personal injury, make sure, after the completion of adjustment work, that neither screws nor nuts are loosened or come in contact with other parts.
7. Make sure, after the completion of replacement work, that neither connectors nor cables are damaged, slipped off or loosened in order to protect against accident that can result in personal injury.
   It should be remembered that some parts have been factory-insulated with tubes or tapes, or floated above the PWB for safety's sake. In addition, internal wiring has been factory-routed or -clamped in such a way that it does not come close to high-voltage parts. Be sure to re-place those parts as they are at the time of delivery.
8. In prevention of accident that can result in personal injury, be sure to check whether the direction of rotation is correct at the time of test run.
9. In prevention of accident that can result in personal injury or entanglement accident, be sure to ensure safety at the time of test run. In addition, be sure to take care not to allow hair or cloths to come in contact with the machine belt.

# Precautions to be taken so as to use the LU-2800 Series more safely

| | |
|---|---|
| DANGER | 1. Keep your hands away from needle when you turn ON the power switch or while the machine is in operation.<br>2. Do not put your fingers into the thread take-up cover while the machine is operating.<br>3. Turn OFF the power switch when tilting the machine head, or removing the belt cover or the V belts.<br>4. During operation, be careful not to allow your or any other person's head, hands or clothes to come close to the handwheel, V belt and motor. Also, do not place anything close to them.<br>5. Do not operate your machine with the belt cover and finger guard removed.<br>6. To avoid personal injury, be careful not to allow your fingers in the machine when tilting the machine head. |
| CAUTION | 1. To ensure safety, never operate the machine with the ground wire for the power supply removed.<br>2. When inserting/removing the power plug, the power switch has to be turned OFF in advance.<br>3. In time of thunder and lightening, stop your work and disconnect the power plug from the receptacle so as to ensure safety.<br>4. If the machine is suddenly moved from a cold place to a warm place, dew condensation may be observed. In this case, turn ON the power to the machine after you have confirmed that there is no danger of water drops in the machine.<br>5. To prevent fires, periodically draw out the power plug from the plug socket and clean the root of the pins and the space between pins.<br>6. The hook rotates at a high speed while the machine is in operation.<br>To prevent possible injury to hands, be sure to keep your hands away from the vicinity of the hook during operation. In addition, be sure to turn OFF the power to the machine when replacing the bobbin.<br>7. To avoid possible accidents due to abrupt start of the machine, be sure to turn OFF the power to the machine.<br>8. Be careful of handling this product so as not to pour water or oil, shock by dropping, and the like since this product is a precision instrument.<br>9. When tilting or returning the sewing machine to the home position, hold the upper side of the machine head with both hands and perform the work quietly so that fingers or the like are not caught in the machine. |

# CAUTION BEFORE OPERATION

**WARNING :**
**To avoid malfunction and damage of the machine, confirm the following.**

- **Before you put the machine into operation for the first time after the set-up, clean it thoroughly. Remove all dust gathering during transportation and oil it well.**
- **Confirm that voltage has been correctly set.**
  **Confirm that the power plug has been properly connected to the power supply.**
- **Never use the machine in the state where the voltage type is different from the designated one.**
- **The direction of normal rotation of the machine is counterclockwise as observed from the pulley side.**
  **Take care not to allow the machine to rotate in the reverse direction.**
- **Never operate the machine unless the machine head and the oil tank have been filled with oil.**
- **For a test run, remove the bobbin and the needle thread.**
- **For the first month, decrease the sewing speed and run the sewing machine at a speed of 80% or less of the maximum sewing speed. As to the maximum sewing speed, see “25. SEWING SPEED TABLE” in the Instruction Manual.**
- **Operate the handwheel after the machine has totally stopped.**

# CONTENTS


1. Specifications ..... 1
2. Standard adjustment ..... 2
   (1) Needle entry position (Standard gauge type) ..... 2
   (2) Needle entry position (Europe gauge type) ..... 4
   (3) Height of the feed dog ..... 6
   (4) Height of the hook ..... 6
   (5) Adjusting the inner hook guide ..... 8
      1) Clearance of inner hook guide ..... 8
      2) Inner hook guide timing ..... 8
   (6) Needle-to-hook timing ..... 10
      1) Height of the needle bar ..... 10
      2) Needle-to-blade point of hook timing ..... 10
      3) Adjusting the hook needle guard ..... 10
   (7) Lift of the presser foot ..... 12
      1) Hand lifter ..... 12
      2) Knee lifter (Without thread trimmer only) ..... 14
      3) Automatic presser foot lifter (Machine with thread trimmer only) ..... 16
   (8) Feed adjustment ..... 18
      1) Horizontal feed cam timing ..... 18
      2) Vertical feed cam timing ..... 18
      3) Alternate momentum ..... 20
      4) Top feed cam timing ..... 20
   (9) Needle sway (Adjusting the bottom feed amount) ..... 22
   (10) Stitch length of forward/reverse feed ..... 24
   (11) Position of the reverse feed control lever ..... 24
   (12) Safety clutch ..... 26
   (13) Balancer ..... 26
   (14) Reverse feed cylinder ..... 28
   (15) Lubrication ..... 30
   (16) Thread trimmer device ..... 32
      1) Position of the counter knife and the clamp spring ..... 32
      2) Position of the counter knife base ..... 34
      3) Vertical position of the moving knife ..... 34
      4) Thread trimmer cam timing ..... 36
      5) Position of the thread trimmer cam ..... 38
      6) Adjusting the knife pressure ..... 38
   (17) Detection switch of the amount of alternate vertical movement ..... 40
   (18) DL device ..... 42
   (19) Adjusting the bottom feed momentum ..... 44
   (20) 2P feed adjustment ..... 46
      1) Zero-point alignment for 2P feed adjustment ..... 46
      2) Forward/reverse stitch pitch of 2P feed adjustment ..... 46
3. Portion to which LOCKTITE is applied ..... 48
4. Selective parts and consumable parts ..... 49
5. Applying grease ..... 50
   (1) Applying grease ..... 50
   (2) Greasing points ..... 50
      1) Needle bar rocking base ..... 50
      2) Alternate vertical change base ..... 51
      3) Horizontal feed change base ..... 51
      4) Greasing point indication drawing (* Indicating the points where grease is applied at shipment.) ..... 52
6. Engraved marker dots on the handwheel (for the machine with thread trimmer only) ..... 64
7. Lubrication route diagram ..... 65
8. Machine head wiring (for the machine with thread trimmer only) ..... 66
   (1) Connectors coming from machine head (Connect to control box) ..... 66
   (2) Connectors that are connected in the head cover ..... 67
9. Troubles and corrective measures ..... 68
   (1) With regard to sewing ..... 68
   (2) With regard to thread trimming ..... 73
10. Drawing of table ..... 77
   (1) For without thread trimming ..... 77
   (2) For SC-922 ..... 78

# 1. Specifications

| No. | Item | Application | |
|---|---|---|---|
| 1 | Model | LU-2810S (Standard gauge type)<br>LU-2810A (Europe gauge type) | LU-2810S-7 (Standard gauge type)<br>LU-2810A-7 (Europe gauge type) |
| 2 | Model name | Direct-drive, 1-Needle, Unison-feed Lockstitch Machine with a Vertical-axis Large Hook | Direct-drive, 1-Needle, Unison-feed Lockstitch Machine with a Vertical-axis Large Hook with an Automatic Thread Trimmer |
| 3 | Application | For heavy-weight materials | |
| 4 | Sewing speed | Max. 3,000 sti/min<br>See “25. SEWING SPEED TABLE” in the Instruction Manual. ***1** | |
| 5 | Needle | GROZ-BECKERT 135 x 17 (Nm 125 to Nm 180) (Standard : Nm 160) | |
| 6 | Applicable thread size for sewing | #30 to #5 (US : #46 to #138, Europe : 60/3 to 20/3) | |
| 7 | Applicable thread size to be cut | | #30 to #5 (US : #46 to #138, Europe : 60/3 to 20/3) |
| 8 | Stitch length | Max. 9 mm (forward/reverse feed) | |
| 9 | Stitch length dial | 1-pitch dial | 2-pitch dial |
| 10 | Presser foot lift | Hand lifter : 10 mm<br>Knee lifter : 20 mm | Hand lifter : 10 mm<br>Automatic presser foot lifter : 20 mm |
| 11 | Stitch length adjusting mechanism | By dial | |
| 12 | Reverse stitch adjusting method | By lever | Air cylinder type<br>(with touch-back switch) |
| 13 | Thread take-up | Link thread take-up | |
| 14 | Needle bar stroke | 40 mm | |
| 15 | Amount of the alternate vertical movement | 1 mm to 9 mm<br>Alternate vertical dial adjustment type | |
| 16 | Hook | Vertical-axis 2-fold hook (Latch type) | |
| 17 | Feed mechanism | Box feed | |
| 18 | Top and bottom feed actuation mechanism | Timing belt | |
| 19 | Thread trimming method | | Cam-driven scissors type |
| 20 | Lubrication | Automatic lubrication by oil tank (with oil gauge) | |
| 21 | Lubricating oil | JUKI New Defrix Oil No. 1 (equivalent to ISO standard VG7)<br>or JUKI MACHINE OIL No. 7 | |
| 22 | Bed size | 643 mm × 178 mm | |
| 23 | Space under the arm | 346 mm × 126 mm | |
| 24 | Hand wheel size | V-belt effective diameter : ø76.0 mm<br>Outer diameter : ø140 mm | Outer diameter : ø123 mm |
| 25 | Motor/Control box | M51N 750W | SC-922 |
| 26 | Machine head weight | 65.8 kg | |
| 27 | Rated power consumption | 84.7 W | |
| 28 | Noise | - Equivalent continuous emission sound pressure level ($L_{pA}$) at the workstation:<br>A-weighted value of 83.0 dB; (Includes $K_{pA}$ = 2.5 dB); according to ISO 10821- C.6.2 - ISO 11204 GR2 at 3,000 sti/min.<br>- Sound power level ($L_{WA}$);<br>A-weighted value of 88.5 dB; (Includes $K_{WA}$ = 2.5 dB); according to ISO 10821- C.6.2 - ISO 3744 GR2 at 3,000 sti/min. | |

***1 For the LU-2810-7, the sewing speed is automatically set according to the amount of the alternate vertical movement.**

## 2. Standard adjustment

### (1) Needle entry position (Standard gauge type)

**WARNING :**
**Turn OFF the power before starting the work so as to prevent accidents caused by abrupt start of the sewing machine.**

**Standard adjustment**

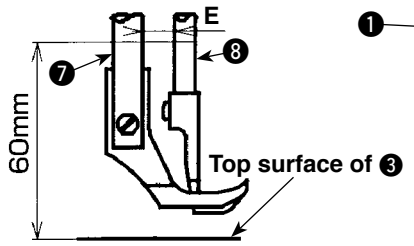


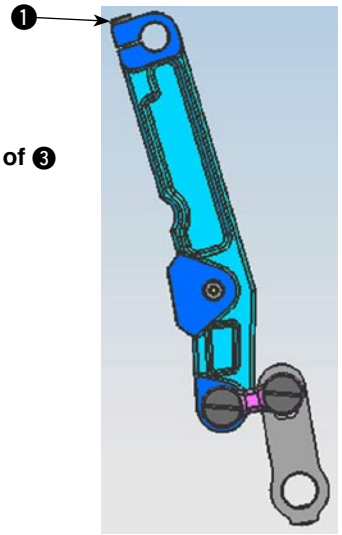

| Model | Dimension E (mm) | Gauge type |
|---|---|---|
| LU-2810 | 7.5 ± 0.1 | Standard gauge type |
| LU-2810-7 | | |

[Conditions]
- Needle bar at lowest dead point
- Feed amount : 0 mm
- Height of feed dog : 0.5 to 0.6 mm (Highest position)

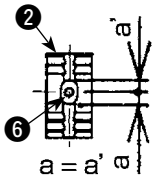


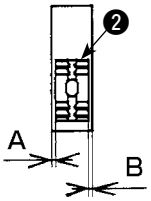


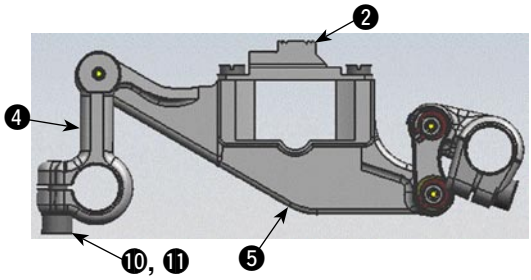


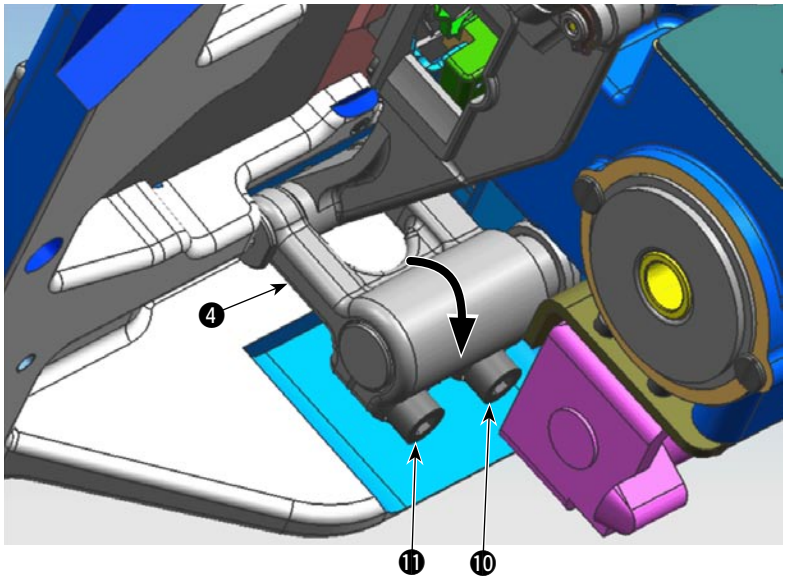

| Adjustment procedures | Results of Improper adjustment |
|---|---|
| 1. Set the feed pitch to the maximum (P=9).<br>2. Turn the handwheel to turn the feed base arm ❹ in the direction of the arrow.<br>Make sure that a clearance is secured in the hexagonal hole in clamping screw, right ❿ of the feed base arm into which a tool can be inserted.<br>3. Only loosen clamping screw, right ❿ of the feed base arm.<br>4. Set the stitch dial to “0”. (Due to adjustment work of the initial position of feed dog)<br>5. Turn the handwheel to bring the needle bar to the lowest dead point of its stroke.<br>6. Loosen clamping screw ❶ of the needle bar rocking link.<br>7. In the state that the presser foot is raised, adjust the clearance between presser bar ❼ and walking bar ❽ to dimension E, then securely tighten clamping screw ❶ of the needle bar rocking link.<br>8. Loosen clamping screw, left ⓫ of the feed base arm to perform the adjustment work. Then tighten clamping screw, left ⓫ of the feed base arm again.<br>9. Perform the adjustment work of step 1. to 2.<br>10. Move the feed base ❺ to adjust so that needle ❻ enters the center of the needle hole in feed dog ❷. Then securely tighten clamping screw, right ❿ of the feed base arm. (a = a’)<br>In addition, adjust the lateral clearances of feed dog ❷ in terms of the window of throat plate ❸ to almost equal values. (A = B)<br>[Checking method]<br>1. Set the stitch dial to the maximum.<br>2. Turn the handwheel and make sure that feed dog ❷ does not come in contact with the throat plate ❸ at the position where the feed dog ❷ travels fully to the front or to the rear. | o Stitch skipping or needle breakage will result.<br>o Poorly tensed stitches will result. |

## (2) Needle entry position (Europe gauge type)

**WARNING :**
**Turn OFF the power before starting the work so as to prevent accidents caused by abrupt start of the sewing machine.**

### Standard adjustment

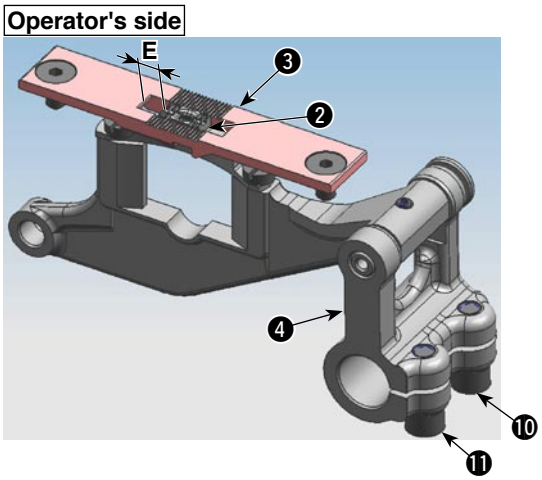


| Model | Dimension E (mm) | Gauge type |
|---|---|---|
| LU-2810 | 5.7 ± 0.2 | Europe gauge type |
| LU-2810-7 | | |

[Conditions]

- Needle bar at lowest dead point
- Feed amount : 0 mm
- Height of feed dog : 0.5 to 0.6 mm (Highest position)

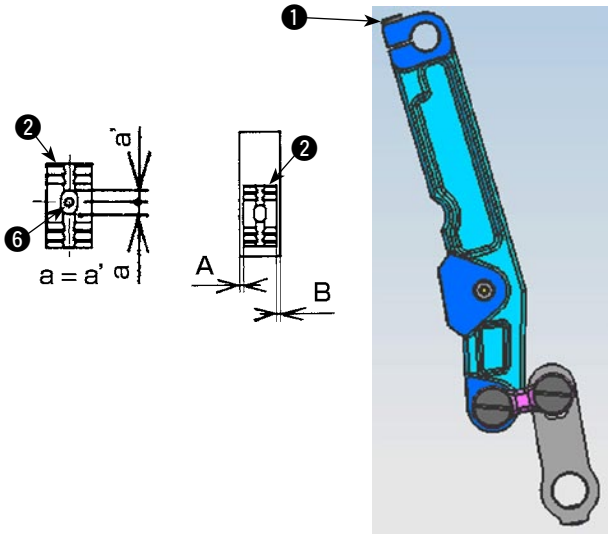


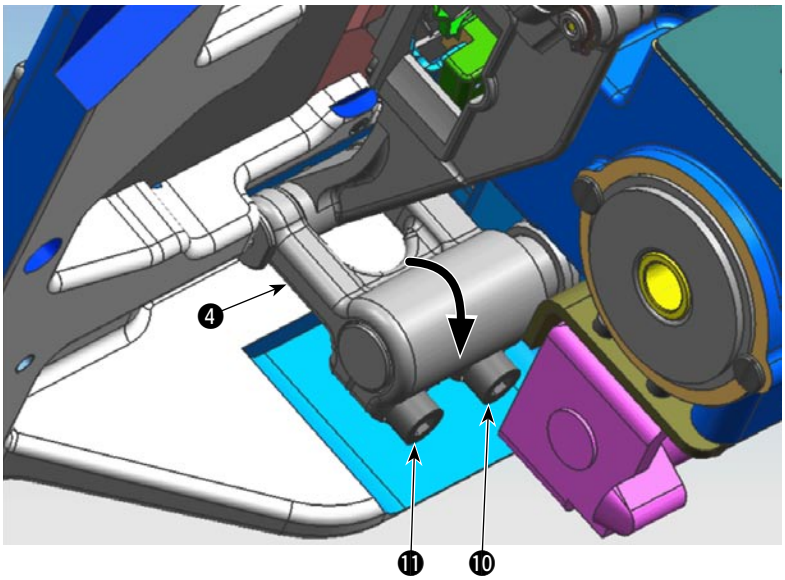

| Adjustment procedures | Results of Improper adjustment |
|---|---|
| 1. Set the feed pitch to the maximum (P=9).<br>2. Turn the handwheel to turn the feed base arm ❹ in the direction of the arrow.<br>Make sure that a clearance is secured in the hexagonal hole in clamping screw, right ❿ of the feed base arm into which a tool can be inserted.<br>3. Only loosen clamping screw, right ❿ of the feed base arm.<br>4. Set the stitch dial to “0”. (Due to adjustment work of the initial position of feed dog)<br>5. Turn the handwheel to bring the needle bar to the lowest dead point of its stroke.<br>6. Loosen clamping screw, left ⓫ of the feed base arm to perform the adjustment work. Then tighten clamping screw, left ⓫ of the feed base arm again.<br>7. Perform the adjustment work of step 1. to 2.<br>8. Adjust the clearance between throat plate ❸ and feed dog ❷ to dimension E, then securely tighten clamping screw, right ❿ of the feed base arm.<br>9. Loosen clamping screw ❶ of the needle bar rocking link.<br>10. Move the needle bar rocking base to adjust so that needle ❻ enters the center of the needle hole in feed dog ❷. Then securely tighten clamping screw ❶ of the needle bar rocking link. (a = a’)<br>In addition, adjust the lateral clearances of feed dog ❷ in terms of the window of throat plate ❸ to almost equal values. (A = B)<br>[Checking method]<br>1. Set the stitch dial to the maximum.<br>2. Turn the handwheel and make sure that feed dog ❷ does not come in contact with the throat plate ❸ at the position where the feed dog ❷ travels fully to the front or to the rear. | o Stitch skipping or needle breakage will result.<br>o Poorly tensed stitches will result. |

## (3) Height of the feed dog

**WARNING :**
**Turn OFF the power before starting the work so as to prevent accidents caused by abrupt start of the sewing machine.**

### Standard adjustment

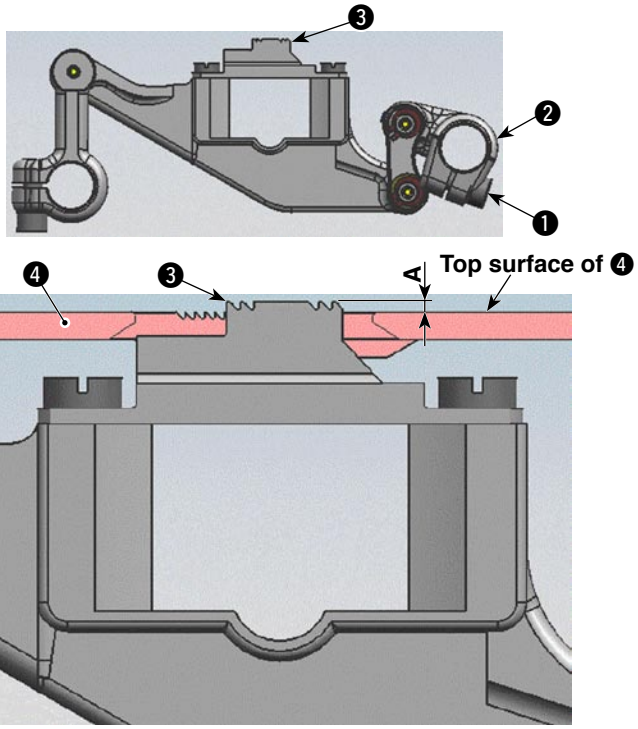


| Model | Dimension A (mm) |
|---|---|
| LU-2810 | 0.5 to 0.6 |
| LU-2810-7 | |

[Conditions]

- Feed amount : 0 mm
- Height of feed dog : maximum

## (4) Height of the hook

**WARNING :**
**Turn OFF the power before starting the work so as to prevent accidents caused by abrupt start of the sewing machine.**

### Standard adjustment

| Model | Dimension A (mm) |
|---|---|
| LU-2810 | 1 ± 0.1 |
| LU-2810-7 | 1.5 ± 0.1 |

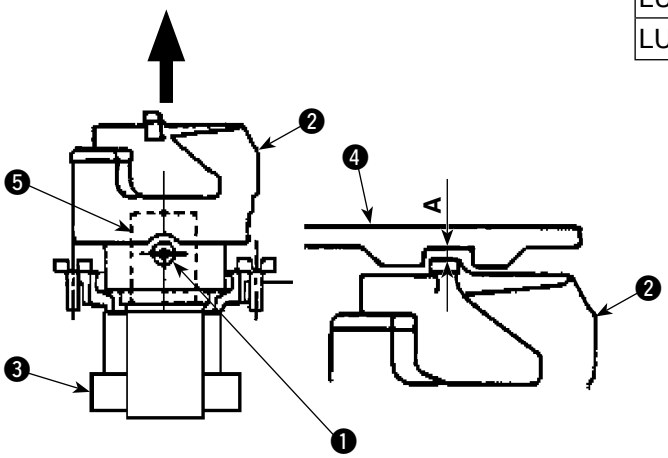

| Adjustment procedures | Results of Improper adjustment |
|---|---|
| 1. Set the stitch dial to “0”.<br>2. Turn the handwheel to bring the height of the feed dog ❸ to the maximum. (Bring the needle bar to the lowest dead point of its stroke.)<br>3. Loosen clamping screw ❶ of the vertical feed front arm.<br>4. Turn the vertical feed front arm ❷ to adjust the height of the feed dog ❸ from top surface of the throat plate ❹ to the dimension A. Then securely tighten clamping screw ❶ of the vertical feed front arm. | When the height of the feed dog ❸ is higher than the specified value :<br>o Stitch pitch becomes larger than the scale of the feed dial.<br>o Balloon stitches will result.<br>o Return of sewing product will occur.<br>o The feed dog ❸ comes in contact with the knife, and the knife and the feed dog ❸ may be damaged.<br>When the height of the feed dog ❸ is lower than the specified value :<br>o Stitch pitch becomes smaller than the scale of the feed dial.<br>o Feed force will be deteriorated. |

| Adjustment procedures | Results of Improper adjustment |
|---|---|
| 1. Loosen two setscrews ❶ of the hook.<br>2. Draw out hook ❷ in the direction of the arrow.<br>3. Replace the washer ❸ to adjust so that the clearance between throat plate ❹ and top surface of hook stopper section of hook ❷ is dimension A.<br>(Refer to "4. Selective parts and consumable parts" about the types of washer ❸.)<br>4. Align the notched section of hook shaft ❺ and No. 1 screw of setscrews ❶ of the hook. Then tighten two setscrews ❶ of the hook. | o Stitch skipping or thread breakage will result.<br>o Needle breakage will result.<br>o Irregular stitches will result. |

## (5) Adjusting the inner hook guide

**WARNING :**
**Turn OFF the power before starting the work so as to prevent accidents caused by abrupt start of the sewing machine.**

### Standard adjustment

#### 1) Clearance of inner hook guide

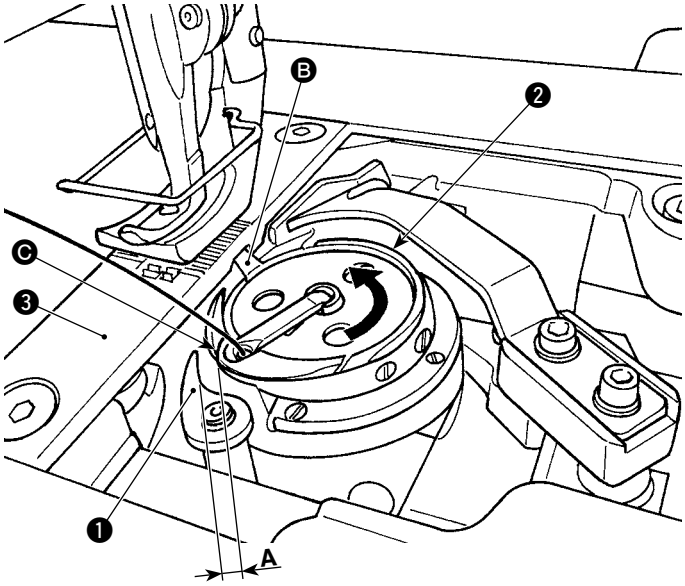


| Model | Dimension A (mm) |
|---|---|
| LU-2810 | 0.7 to 0.9 |
| LU-2810-7 | |

[Conditions]
- When the inner hook guide comes nearest to the protruding portion of bobbin case.
- Press the inner hook stopper against the groove in the throat plate.

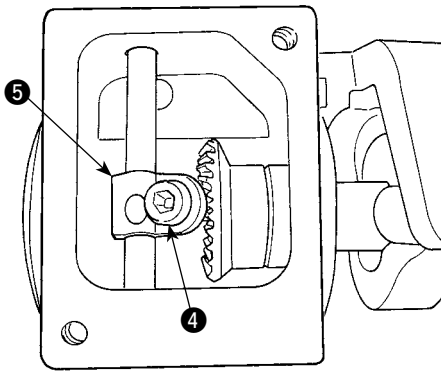


#### 2) Inner hook guide timing

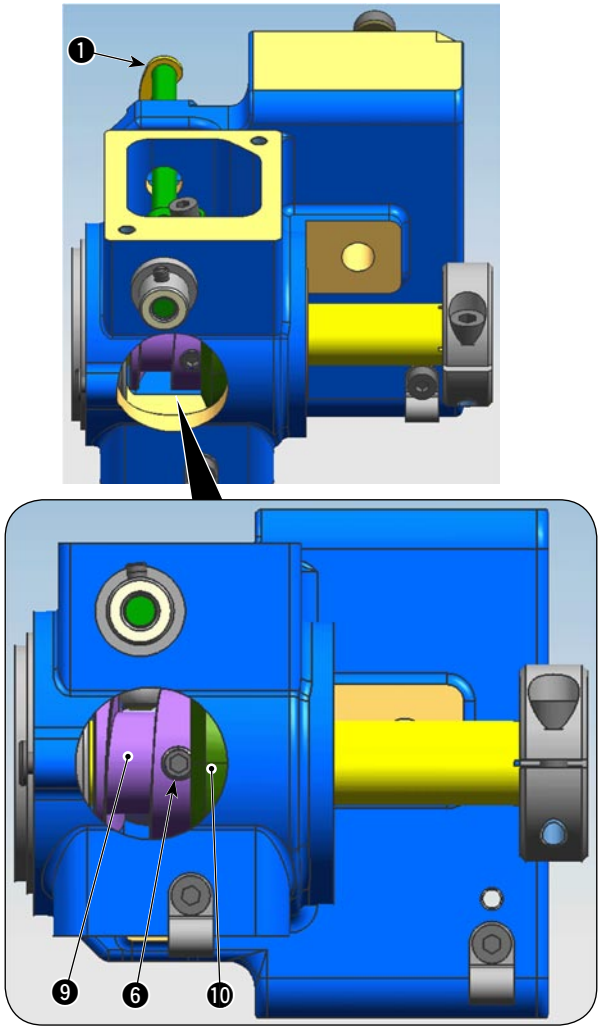


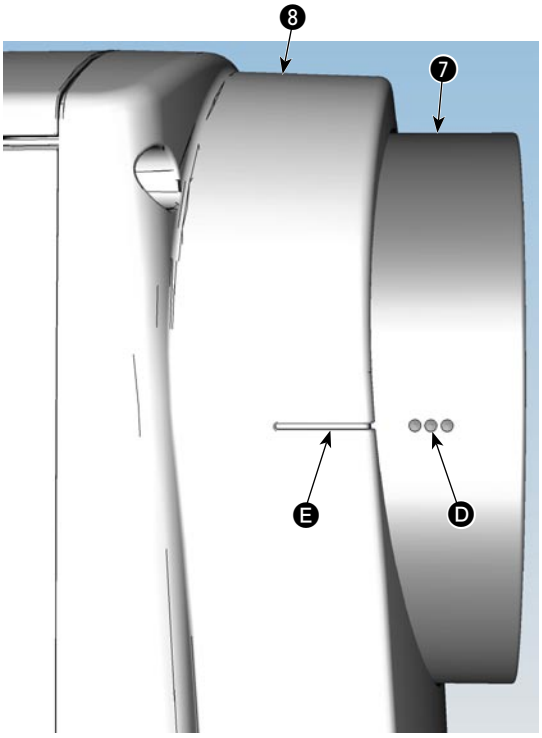


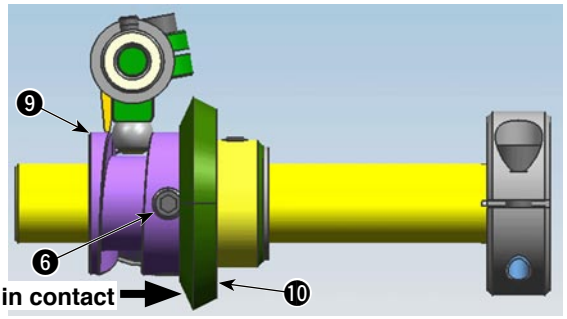

| Adjustment procedures | Results of Improper adjustment |
|---|---|
| **1) Clearance of inner hook guide**<br>1. Turn the handwheel ❼ in its normal rotational direction to bring that inner hook guide ❶ comes nearest to the protruding portion of bobbin case.<br>2. Turn inner hook ❷ in the direction of the arrow until inner hook stopper Ⓑ is pressed against the groove in throat plate ❸.<br>3. Loosen setscrew ❹ of the inner hook guide arm. Adjust the clearance between the inner hook guide ❶ and protruding portion Ⓒ of the bobbin case to dimension A.<br>4. Tighten setscrew ❹ of the inner hook guide arm while pressing down inner hook guide arm ❺. | When the clearance is larger than the specified value :<br>o Loose stitches or thread breakage will result.<br>When the clearance is smaller than the specified value :<br>o Inner hook ❷ or inner hook guide ❶ may be damaged. |
| **2) Inner hook guide timing**<br>1. Loosen setscrew ❻ of the opener cam ❾.<br>2. Three marker dots Ⓓ on the handwheel ❼ aligns with marker line Ⓔ on the motor cover ❽ when inner hook guide ❶ comes nearest to the protruding portion of bobbin case. Then tighten setscrew ❻ of the opener cam ❾.<br>* Tighten setscrew ❻ of the opener cam ❾ in the state that the opener cam ❾ is pressed against the lower shaft gear ❿. | |

## (6) Needle-to-hook timing

**WARNING :**
**Turn OFF the power before starting the work so as to prevent accidents caused by abrupt start of the sewing machine.**

### Standard adjustment

**1) Height of the needle bar**

**2) Needle-to-blade point of hook timing**

**3) Adjusting the hook needle guard**

| Model | Dimension A (mm) | Dimension B (mm) | Dimension C (mm) |
|---|---|---|---|
| LU-2810 | 2.3 ± 0.2 | 1.5 ± 0.2 | 0.05 to 0.2 |
| LU-2810-7 | | | |

[Conditions]

- Feed amount : 0 mm
- Needl bar rises from the lowest dead point of its stroke.

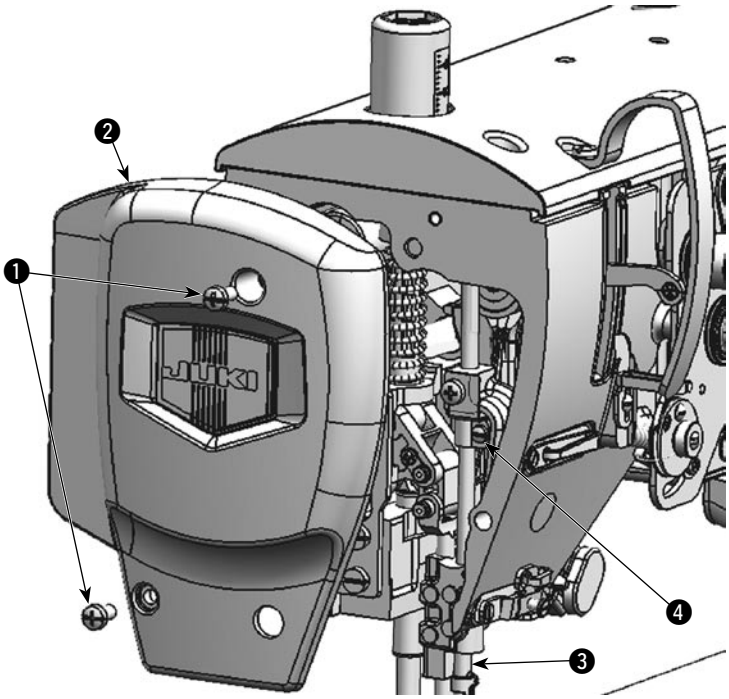


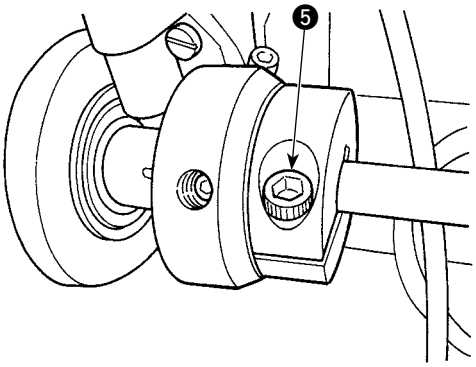


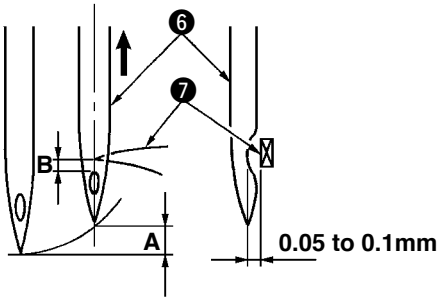


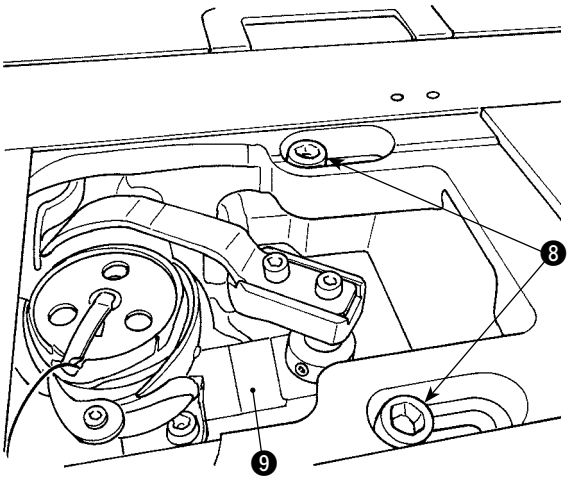


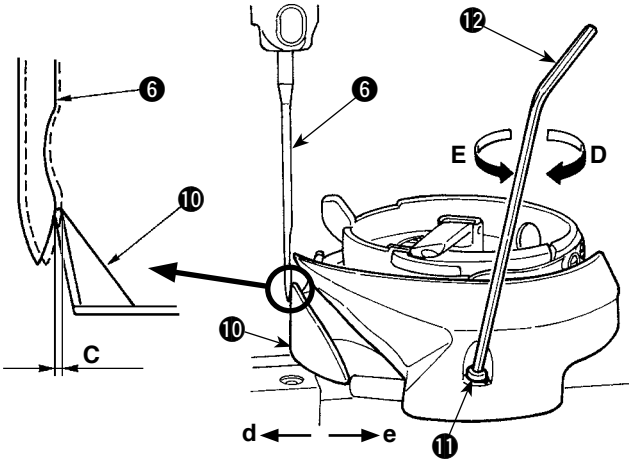

| Adjustment procedures | Results of Improper adjustment |
|---|---|
| **1) Height of the needle bar**<br>1. Set the stitch dial to “0”.<br>2. Loosen setscrews ❶ of the face plate to remove the face plate ❷.<br>3. Turn the handwheel to bring so that needle bar ❸ is raised from the lowest dead point of its stroke to dimension A.<br>4. Loosen clamping screw ❹ of the needle bar holder.<br>At this time, loosen the screw to such an extent that needle bar ❸ moves up and down by hand since needle bar ❸ drops if the screw is fully loosened.<br>5. Move needle bar ❸ to adjust so that the distance from the top end of the needle eyelet to blade point of the hook ❼ becomes dimension B. Then tighten clamping screw ❹ of the needle bar holder.<br><br>**2) Needle-to-blade point of hook timing**<br>1. Set the stitch dial to “0”.<br>2. Loosen clamping screw ❺ of the lower shaft set collar, and turn the handwheel counterclockwise to make the needle bar ❸ ascend by 2.3 mm (dimension A) from the lowest position of its stroke.<br>3. In the state described in 2., align blade point of the hook ❼ with center of the needle ❻, and tighten clamping screw ❺ of the lower shaft set collar. At this time, a clearance of 1.5 mm is provided between blade point of the hook ❼ and top end of the needle eyelet.<br>4. Loosen two setscrews ❽ of the hook shaft base on the top face of the bed. Adjust the clearance between blade point of the hook ❼ and the needle ❻ to 0.05 to 0.1 mm by moving the hook shaft base ❾ to right or left to change its position. Then, tighten two setscrews ❽ of the hook shaft base.<br>5. Align the largest scale mark of the standard stitch dial with the marker dot on the machine arm. Check to be sure that blade point of the hook ❼ does not come in contact with the needle ❻.<br>**(Caution) The operation panel could come in contact with the thread stand when tilting the machine head. To protect the relevant parts from contact, shift the thread stand to a position at which the thread stand does not interfere with the control panel.**<br>**(Reference) [Only for the LU-2810-7]**<br>**To check the needle bar ❸ position as described in the aforementioned 2. [i.e., "...the needle bar ❸ ascend by 2.3 mm (dimension A) from the lowest position of its stroke."], you may use the display of the main shaft rotation angel under the "machine head adjustment mode" of the SC-922.**<br>**Increase the numerical value displayed when the needle bar ❸ is in its lowest position of its stroke under the "machine head adjustment mode" by 25 degrees of an angle, the needle bar ❸ goes up by 2.3 mm. (When the needle bar ascends by 2.3 mm (dimension A) from its lowest position of its stroke, the main shaft rotation angle is 25 degrees of an angle.)**<br>*** In the case of adjusting the needle-to-hook relation under the "machine head adjustment mode", do not press ⊕ switch.**<br>**Refer to "II-10. Adjustment of the machine head" in the Instruction Manual for the SC-922 for the machine head adjustment mode.**<br><br>**3) Adjusting the hook needle guard**<br>When a hook has been replaced, be sure to check the position of the hook needle guard ❿.<br>1. As the standard position of the hook needle guard ❿, the hook needle guard ❿ must push the side face of needle ❻ to lean the needle by 0.05 to 0.2 mm away from its straight position.<br>2. If the state of the hook is not as shown above, fit the hexagon wrench ⓬ into the needle guard adjusting screw ⓫ and adjust as follows:<br>1) To bend the hook needle guard ❿ in direction **d**, turn the needle guard adjusting screw ⓫ in direction **D**.<br>2) To bend the hook needle guard ❿ in direction **e**, turn the needle guard adjusting screw ⓫ in direction **E**. | o Stitch skipping or thread breakage will result.<br>o Loose stitches will result. |

## (7) Lift of the presser foot

**WARNING :**
**Turn OFF the power before starting the work so as to prevent accidents caused by abrupt start of the sewing machine.**

### Standard adjustment

#### 1) Hand lifter

[Conditions]
• State that the hand lifter is raised.

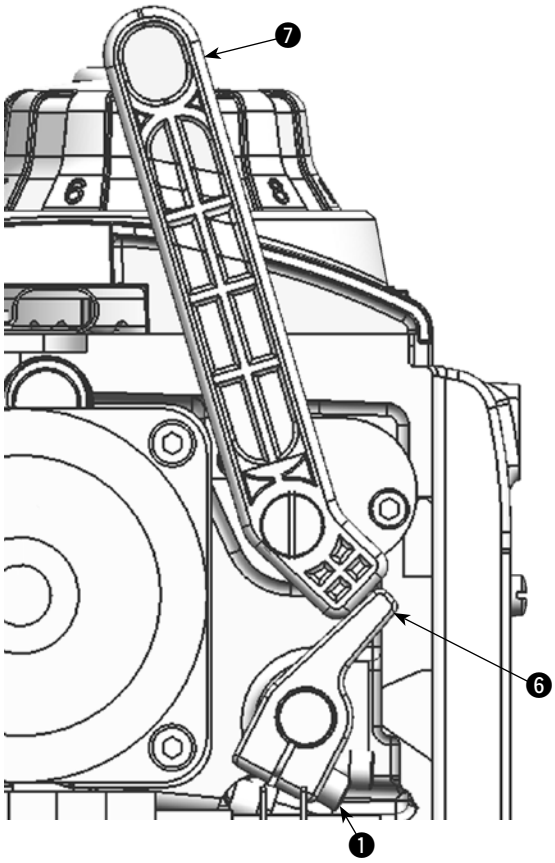


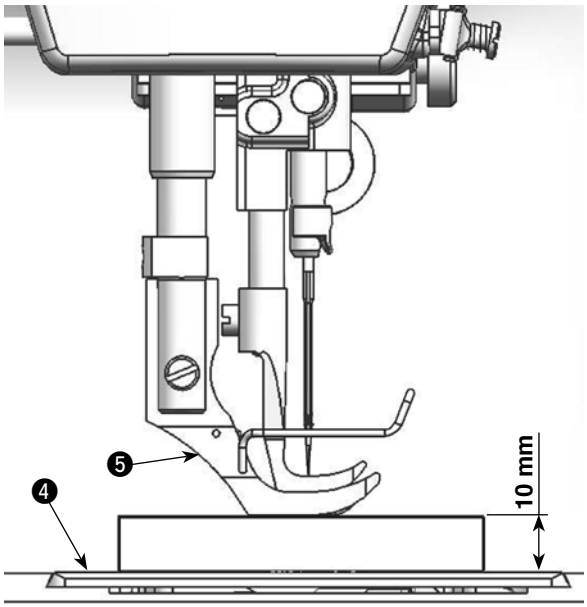


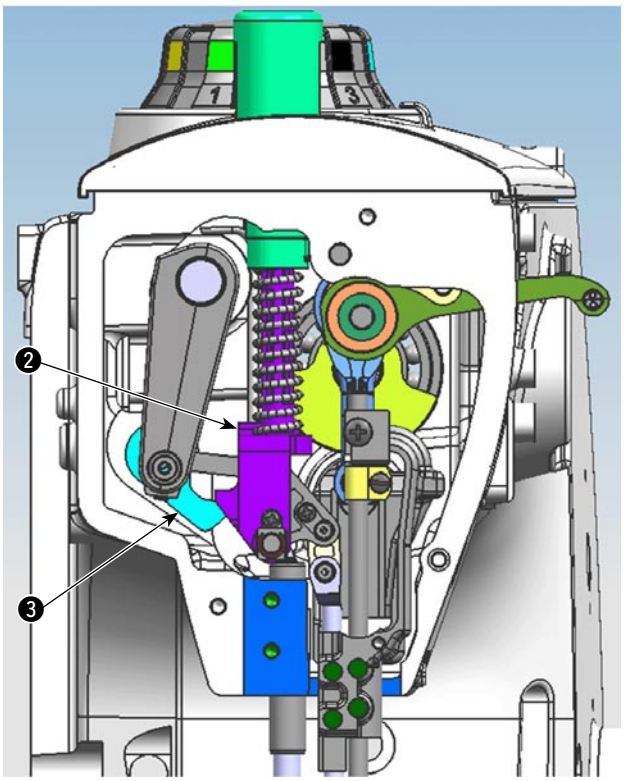


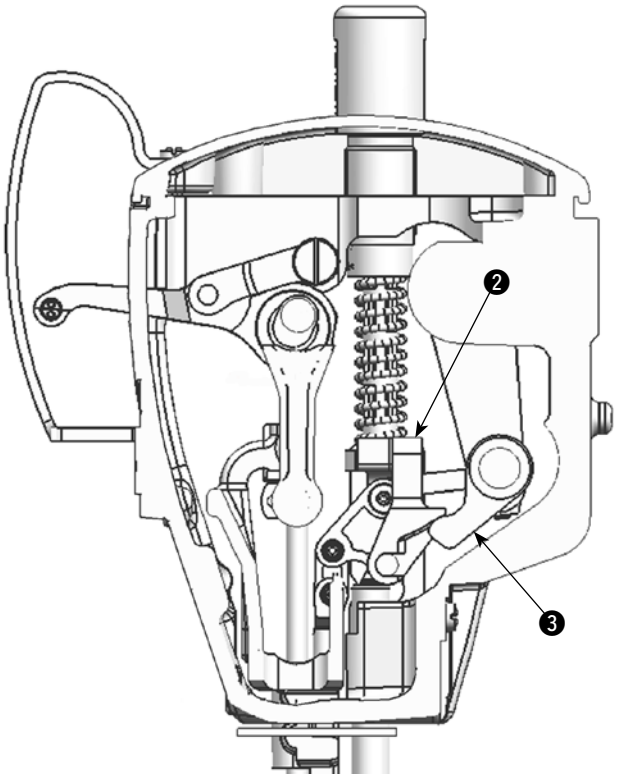

| Adjustment procedures | Results of Improper adjustment |
|---|---|
| **1) Hand lifter**<br>1. Loosen setscrews of the motor cover to remove the motor cover.<br>2. Loosen setscrews of the face plate to remove the face plate.<br>3. Loosen clamping screw ❶ of the hand lifter A.<br>4. Adjust the lifting amount to 10 ± 1 mm in the state that the lifter plate ❸ is in contact with the spring receiving ❷.<br>At this time, place a thing thickness of which is 10 mm between the top surface of throat plate ❹ and the under surface of presser foot ❺ to facilitate adjustment.<br>5. In the state as described in the aforementioned step 3, bring hand lifter A ❻ and B ❼ into the state as illustrated in the figure and tighten clamping screw ❶ of the hand lifter A.<br>6. Remove the 10 mm thick thing placed between the top surface of throat plate ❹ and the under surface of presser foot ❺.<br>7. Attach the motor cover.<br>8. Attach the face plate. | When the lifting amount is higher than the specified value :<br>o The presser foot is held raised from the top surface of the throat plate even when the hand lifter is returned to its home position.<br>When the lifting amount is lower than the specified value :<br>o The presser foot is not sufficiently raised and the working property may be deteriorated. |

**WARNING :**
**Turn OFF the power before starting the work so as to prevent accidents caused by abrupt start of the sewing machine.**

## Standard adjustment

### 2) Knee lifter (Without thread trimmer only)

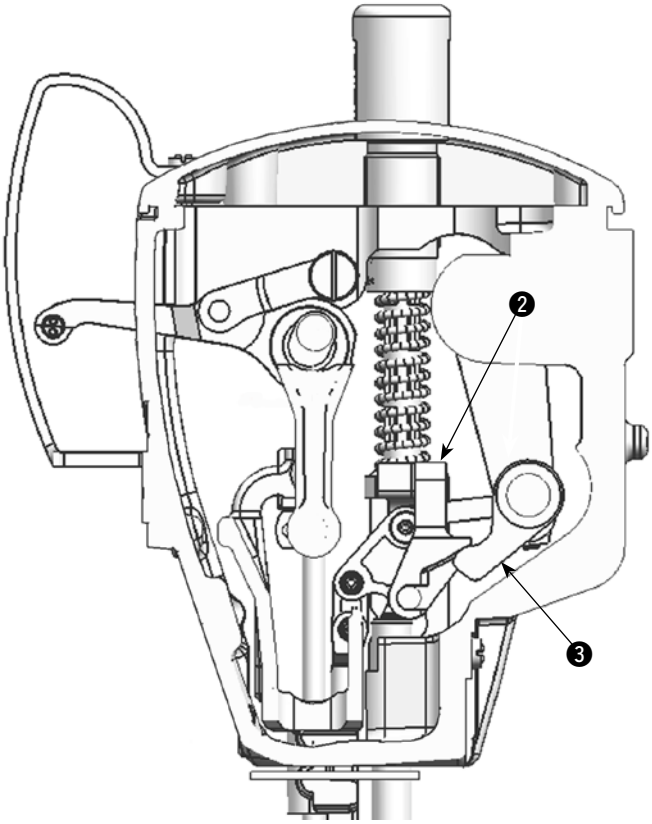


[Conditions]

- Lifting amount when stopper screw of knee lifter rotation arm comes in contact with mahcine bed.

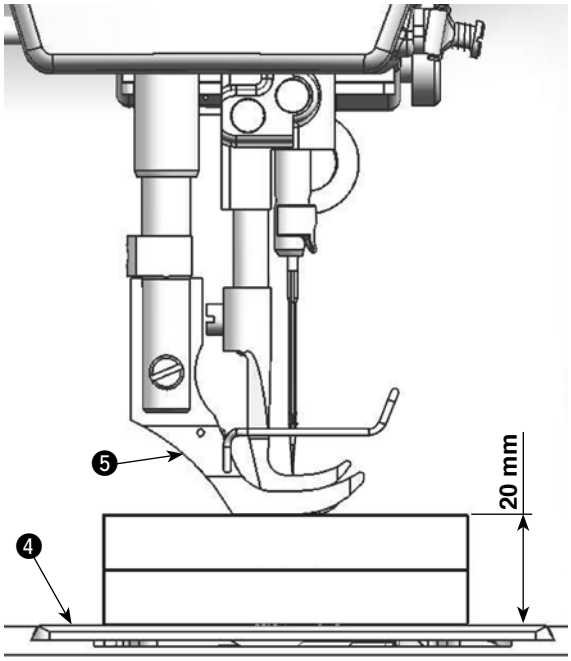


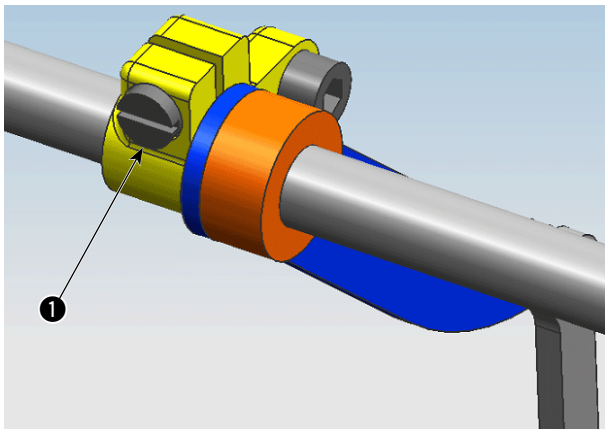


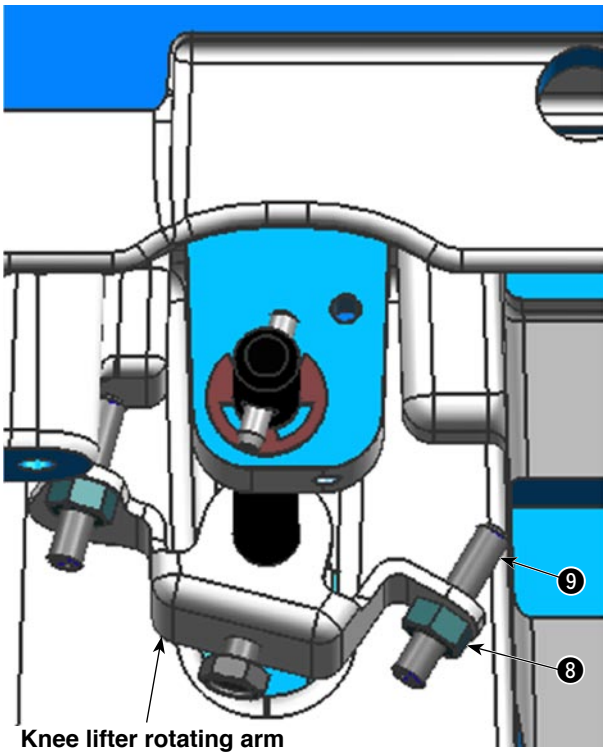


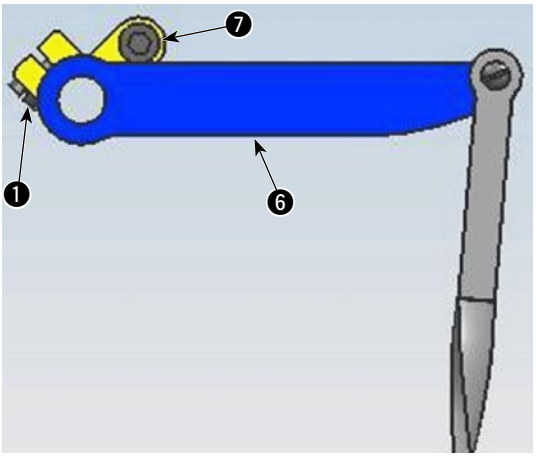

| Adjustment procedures | Results of Improper adjustment |
|---|---|
| **2) Knee lifter (Without thread trimmer only)**<br>1. Loosen setscrews of the face plate and the rear cover to remove the face plate and the rear cover.<br>2. Loosen clamping screw ❶ of the knee lifter connecting arm.<br>3. Adjust the lifting amount to 19 to 20 mm in the state that the lifter plate ❸ is in contact with the spring receiving ❷.<br>At this time, place a thing thickness of which is 20 mm between the top surface of throat plate ❹ and the under surface of presser foot ❺ to facilitate adjustment.<br>4. Move the knee lifter link C ❻ to the horizontal position in the state of step 3, and tighten clamping screw ❶ of the knee lifter connecting arm in the state that the knee lifter link C ❻ is in contact with screw ❼ of the knee lifter connecting arm.<br>5. Remove the 20 mm thick thing placed between the top surface of throat plate ❹ and the under surface of presser foot ❺.<br>6. Attach the face plate and the rear cover.<br>7. Remove the knee press plate and tilt the machine arm.<br>8. Loosen stopper nut ❽ to adjust the lifting amount by screwing amount of stopper screw ❾.<br>To use the machine with the amount of alternate vertical movement is set at 6.5 mm or more, adjust that the height from the top surface of throat plate ❹ to the under surface of presser foot ❺ is 16 ± 0.5 mm.<br>(Step 7. to 8. is standard gauge type only.)<br><br>**(Caution)** **1. Check to be sure that parts of the knee lifter mechanism does not come in contact with the frame and other parts around it when the knee lifter link C ❻ is positioned horizontally.**<br>**If the knee lifter link C ❻ comes in contact with the aforementioned parts, loosen the thrust collar setscrews and adjust the lateral position of the link.**<br>**2. Tighten clamping screw ❶ of the knee lifter connecting arm so that the knee lifter link C ❻ is no lateral play.**<br>**3. For the standard gauge type machine, the walking foot interferes with the needle bar when the amount of the alternating vertical movement of the walking foot and the presser foot is set at 6.5 mm or more. To use the machine with the amount of the alternating vertical movement is set at 6.5 mm or more, set the lifting amount of the knee lifter at 16 ± 0.5 mm.** | When the lifting amount is higher than the specified value :<br>o The top end of the needle bar interferes with the walking foot and the walking foot may be damaged when the presser foot is raised.<br>When the lifting amount is lower than the specified value :<br>o The presser foot is not sufficiently raised and the working property may be deteriorated |

**WARNING :**
**As the work is performed while the power is ON, never touch the switches other than the necessary one so as to prevent accidents caused by the malfunction of switches.**

## Standard adjustment

### 3) Automatic presser foot lifter (Machine with thread trimmer only)

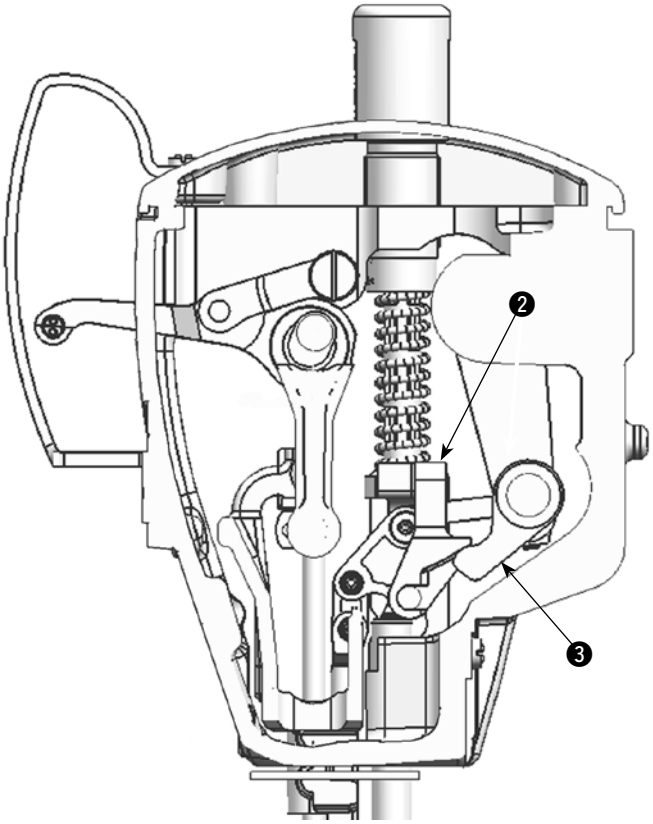


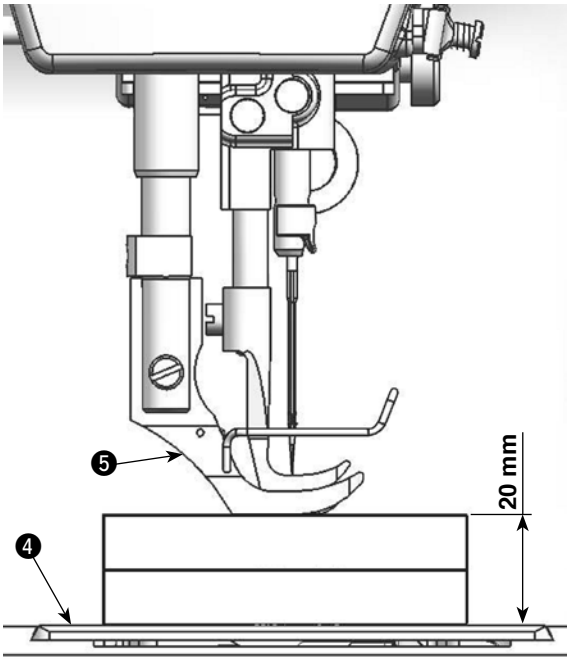


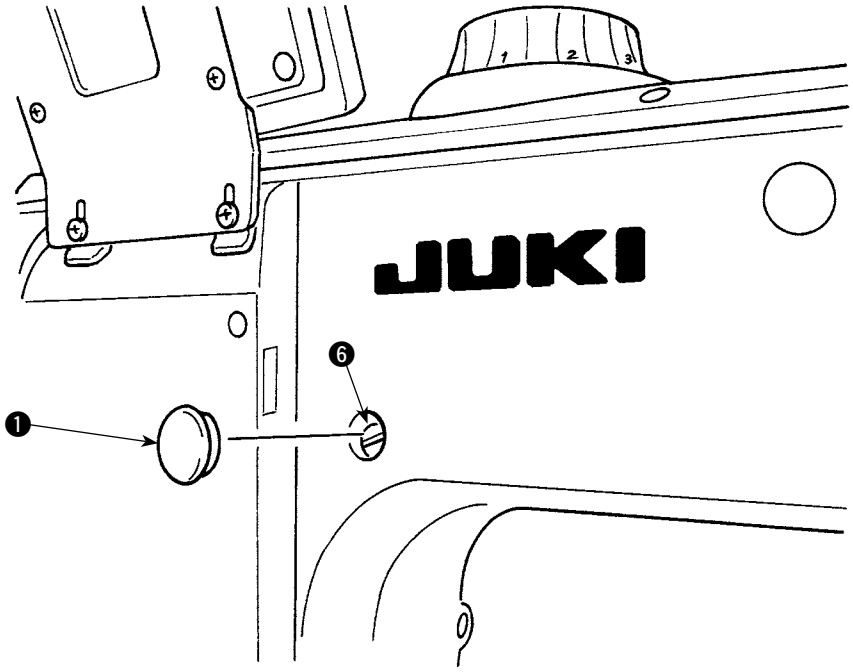

| Adjustment procedures | Results of Improper adjustment |
|---|---|
| **3) Automatic presser foot lifter (Machine with thread trimmer only)**<br>1. Turn the power ON. Carry out thread trimming once. Turn ON the automatic presser foot lifter.<br>2. Remove rubber cap ❶ from the rear face of the machine arm. Loosen clamping screw ❻ of the automatic presser foot lifter arm.<br>3. Adjust the lifting amount to 19 to 20 mm in the state that the lifter plate ❸ is in contact with the spring receiving ❷.<br>At this time, place a thing thickness of which is 20 mm between the top surface of throat plate ❹ and the under surface of presser foot ❺ to facilitate adjustment.<br>4. Tighten clamping screw ❻ of the automatic presser foot lifter arm in the state of step 3.<br>5. Remove the 20 mm thick thing placed between the top surface of throat plate ❹ and the under surface of presser foot ❺.<br>6. Attach rubber cap ❶ from the rear face of the machine arm.<br><br>**(Caution) For the standard gauge type machine, the walking foot interferes with the needle bar when the amount of the alternating vertical movement of the walking foot and the presser foot is set at 6.5 mm or more. To use the machine with the amount of the alternating vertical movement is set at 6.5 mm or more, set the lifting amount of the automatic presser foot lifter at 16 ± 0.5 mm.** | When the lifting amount is higher than the specified value :<br>o The top end of the needle bar interferes with the walking foot and the walking foot may be damaged when the presser foot is raised.<br>When the lifting amount is lower than the specified value :<br>o The presser foot is not sufficiently raised and the working property may be deteriorated |

## (8) Feed adjustment

**WARNING :**
**Turn OFF the power before starting the work so as to prevent accidents caused by abrupt start of the sewing machine.**

### Standard adjustment

#### 1) Horizontal feed cam timing

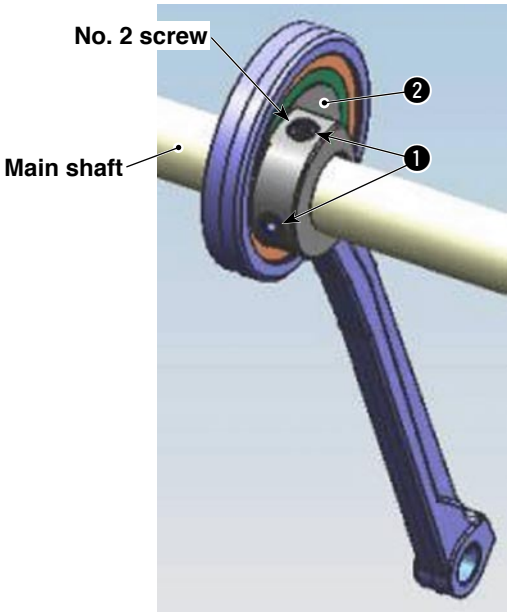


[Conditions]
- Feed amount : maximum
- Needle bat at lowest dead point

#### 2) Vertical feed cam timing

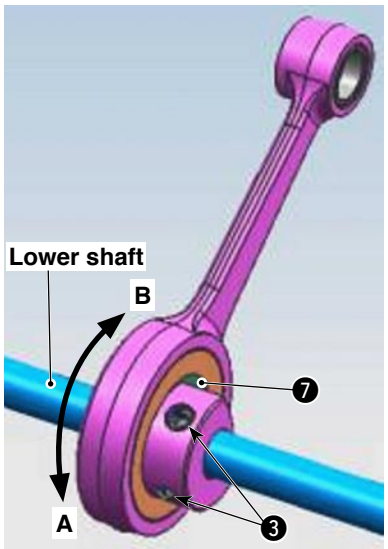


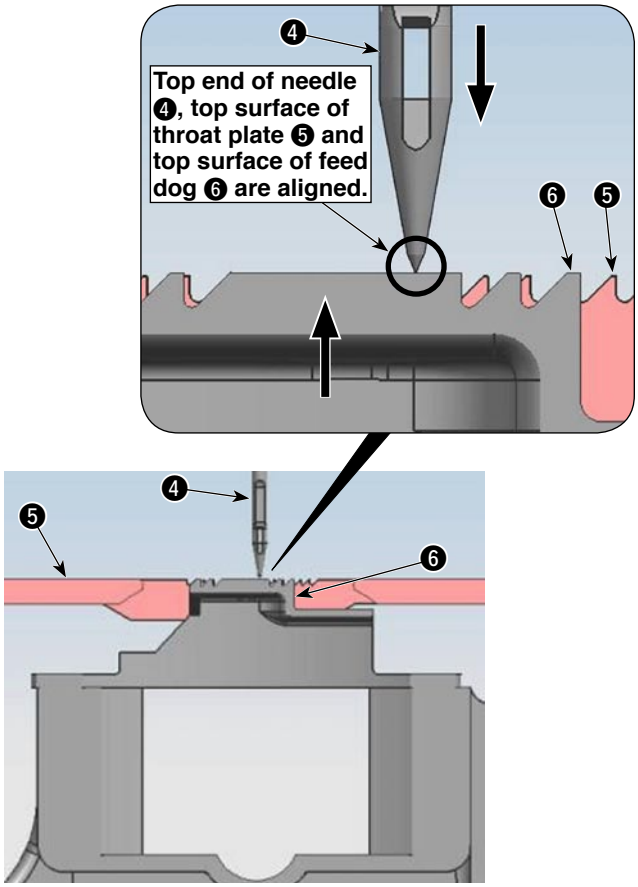


[Conditions]
- Feed amount : 6 mm
- When needle is lowered and feed dog is rised.

| Adjustment procedures | Results of Improper adjustment |
|---|---|
| **1) Horizontal feed cam timing**<br>1. Set the stitch dial to the maximum.<br>2. Loosen two setscrews ❶ of the horizontal feed eccentric cam.<br>3. Turn the handwheel to bring the needle bar to the lowest dead point of its stroke.<br>4. Turn the horizontal feed eccentric cam ❷ and adjust the timing so that the feed dog ❻ no longer moves even when the reverse feed control lever is moved.<br>5. Securely tighten two setscrews ❶ of the horizontal feed eccentric cam.<br><br>**(Standard) The setscrew No. 2 of the horizontal feed eccentric cam ❷ faces almost right above at the lowest dead point of the needle bar.**<br>**(Caution) 1. If the cam slips in the axial direction at the time of adjustment, torque becomes heavy. So, be careful.**<br>**2. After adjusting the horizontal feed timing, re-adjust the top feed timing.** | o Pitch error at high or low speed is apt to occur.<br>o Needle thread tension will vary.<br>o Stitch tightness at normal and reverse feed will vary. |
| **2) Vertical feed cam timing**<br>1. Perform the adjustment after adjusting the horizontal feed timing.<br>2. Set the stitch dial to “6”.<br>3. Loosen two setscrews ❸ of the vertical feed cam.<br>4. Turn the vertical feed cam ❼ to the position where top end of the needle ❹ aligns with top surface of the throat plate ❺, and top surface of the throat plate ❺ aligns with feed dog ❻.<br>5. Tighten two setscrews ❸ of the vertical feed cam.<br><br>**(Standard) When three points of top end of the needle ❹, top surface of the throat plate ❺ and top surface of feed dog ❻ are aligned with one another, the setscrew No. 1 of the vertical feed cam ❼ faces almost right below for the sewing machine.** | o Improper stitch length may result when the machine is operated at high or low speed.<br>o When the vertical feed cam ❼ is fixed after turning it toward the operator (in the direction of arrow A) from the standard adjustment position, the feed driving timing will be advanced. When the vertical feed cam ❼ is fixed after turning it away from the operator (in the direction of arrow B) from the standard adjustment position, the feed driving timing will be retarded. |

**WARNING :**
**Turn OFF the power before starting the work so as to prevent accidents caused by abrupt start of the sewing machine.**

## Standard adjustment

### 3) Alternate momentum

[Conditions]
- Feed amount : 0 mm
- Amount of alternate vertical movement : 3 mm

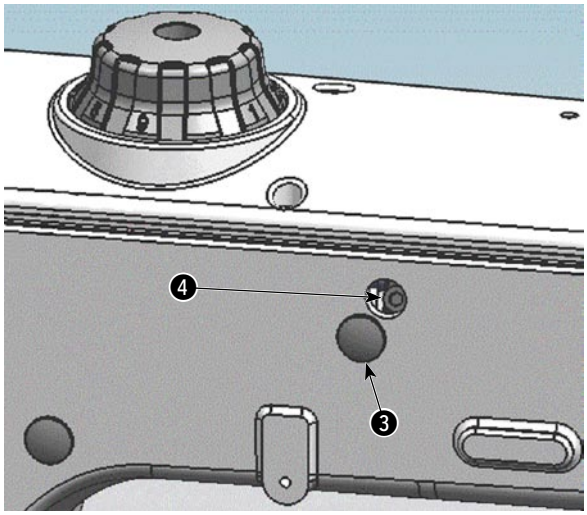


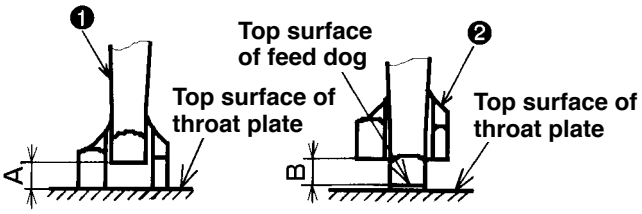


### 4) Top feed cam timing

[Conditions]
- Feed amount : 6 mm
- Amount of alternate vertical movement : 3 mm
- When needle and walking foot is lowered.

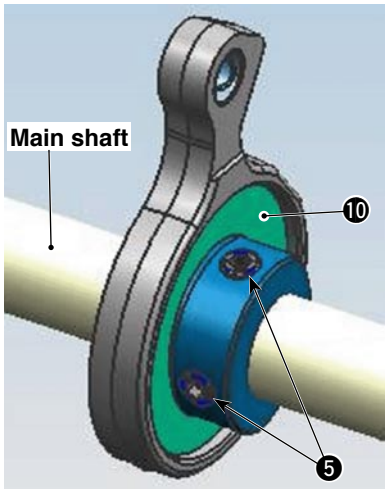


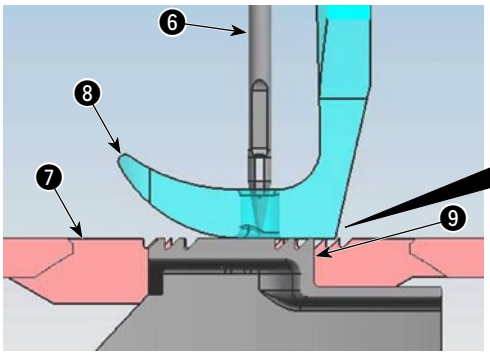


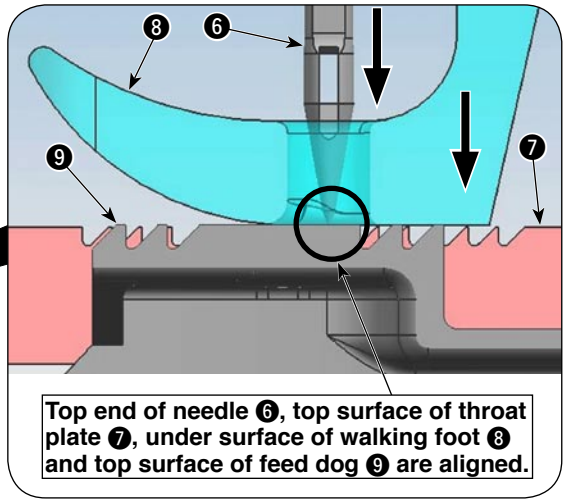

| Adjustment procedures | Results of Improper adjustment |
|---|---|
| **3) Alternate momentum**<br>1. Set the stitch dial to “0”.<br>2. Turn the handwheel to make sure that the amount of alternate vertical movement of walking foot ❶ and presser foot ❷ is almost equal.<br>3. When the amount of alternate vertical movement is not equal, remove the rubber plug ❸ on the rear face of machine arm. Loosen clamping screw ❹ of the top feed rear arm to adjust so that the amount of alternate vertical movement can be unified. Adjust the amount almost to A = B.<br><br>o When the amount of alternate vertical movement of the walking foot is larger than that of the presser foot :<br>1) Loosen clamping screw ❹ of the top feed rear arm in the state that walking foot ❶ is raised a little, press walking foot ❶ against the feed dog.<br>2) Re-tighten clamping screw ❹ of the top feed rear arm and turn the handwheel to make sure of the amount of alternate vertical movement. | Adjust the amount of alternate vertical movement of the walking foot ❶ so that it is larger than that of the presser foot ❷ in accordance with the sewing products.<br>o Sewing sponge material or the like<br>o Sewing material with overlapped sections<br>When the amount of alternate vertical movement of the walking foot ❶ and presser foot ❷ are considerably different :<br>o The stitch pitch is different from the value set by the dial.<br>o Decrease the number of revolution of the motor a little since the feed efficiency is decreased. |
| **4) Top feed cam timing**<br>1. Set the stitch dial to “6”.<br>2. Set the alternate vertical dial to “3”.<br>3. Loosen setscrews of the top cover to remove the top cover.<br>4. Loosen two setscrews ❺ of the top feed cam.<br>5. Turn the top feed cam ❿ to the position where four points of top end of the needle ❻, top surface of the throat plate ❼, under surface of walking foot ❽ and top surface of feed dog ❾ are aligned with one another under the condition that the amount of alternate vertical movement is equal.<br>6. Tighten two setscrews ❺ of the top feed cam.<br>7. Attach the top cover.<br><br>**(Standard) When four points of top end of the needle ❻, top surface of the throat plate ❼, under surface of walking foot ❽ and top surface of feed dog ❾ are aligned with one another, the setscrew No. 2 of the top feed cam ❿ is visible from the position between the alternate vertical change base and the machine frame.** | o Pitch error at high or low speed is apt to occur. |

## (9) Needle sway (Adjusting the bottom feed amount)

**WARNING :**
**Turn OFF the power before starting the work so as to prevent accidents caused by abrupt start of the sewing machine.**

### Standard adjustment

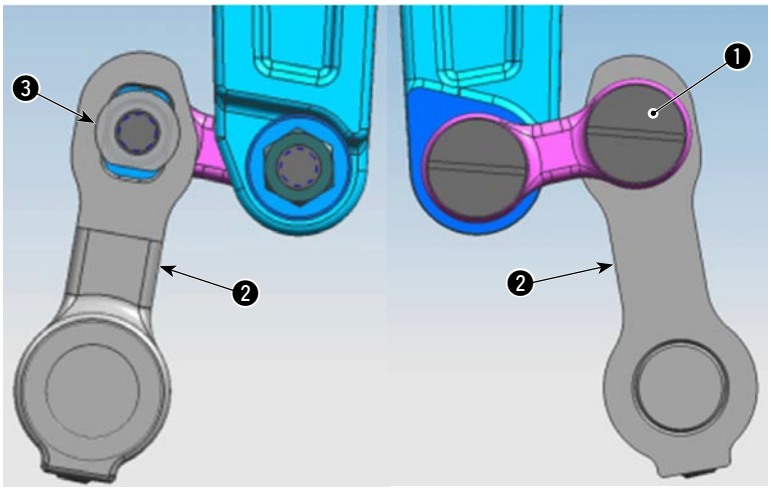


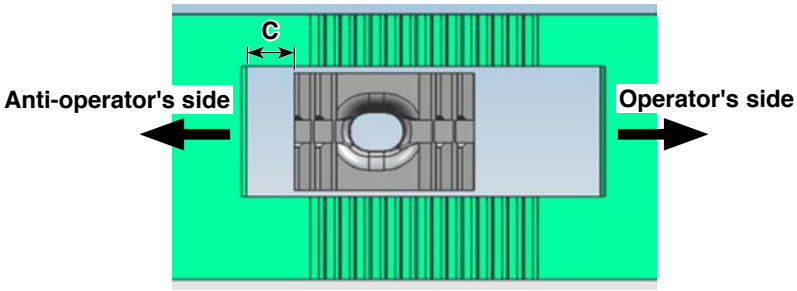


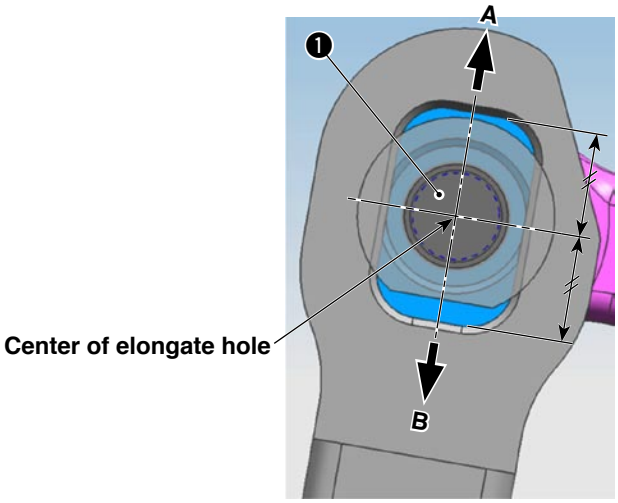


**A : Bottom feed amount is decreased.**
**B : Bottom feed amount is increased.**

| Adjustment procedures | Results of Improper adjustment |
|---|---|
| 1. Set the standard stitch dial to “6”.<br>2. Loosen hinge screw ❶ of the horizontal feed rear arm.<br>3. Center of elongate hole of the horizontal feed rear arm ❷ is aligned with hinge screw nut ❸ of the horizontal feed rear arm. Then tighten hinge screw ❶ of the horizontal feed rear arm.<br>4. Turn the handwheel to check the clearance (dimension **C**) between the feed dog of anti-operator's side and the throat plate, at the position so that the needle is away from the feed dog.<br>[Dimension **C**]<br>• Standard gauge : 4 ± 0.2 mm<br>• Europe gauge : 3 ± 0.2 mm<br><br>**(Standard) When Adjust the position of hinge screw nut ❸ of the horizontal feed rear arm in the direction of arrow A, the bottom feed amount is decreased. When Adjust the position of hinge screw nut ❸ of the horizontal feed rear arm in the direction of arrow B, the bottom feed amount is increased.**<br>**(Caution) When you desire to change the bottom feed amount, re-adjust the needle entry position since the needle entry position changes.** | o Needle breakage or stitch skipping will result. |

## (10) Stitch length of forward/reverse feed

**WARNING :**
**Turn OFF the power before starting the work so as to prevent accidents caused by abrupt start of the sewing machine.**

### Standard adjustment

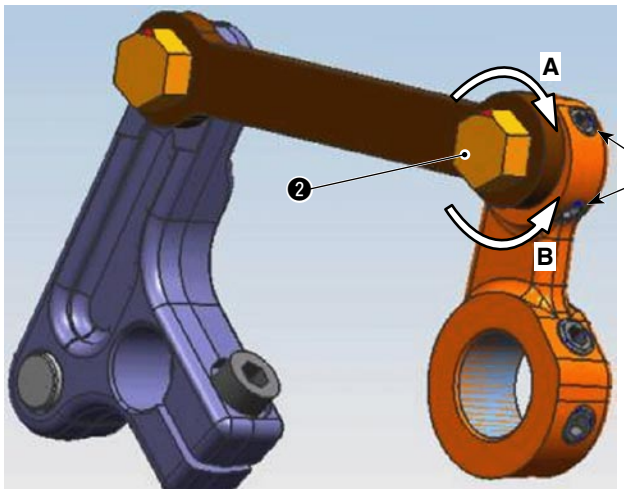


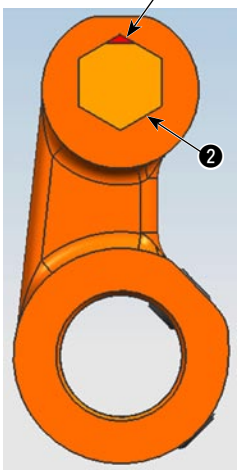


[Conditions]
- Feed amount : 6 mm

## (11) Position of the reverse feed control lever

**WARNING :**
**Turn OFF the power before starting the work so as to prevent accidents caused by abrupt start of the sewing machine.**

### Standard adjustment

o In case of LU-2810-7

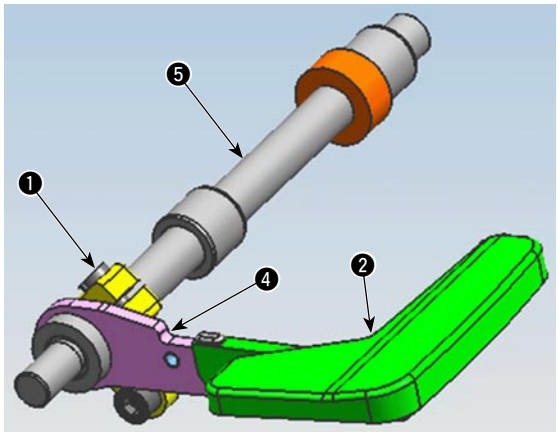


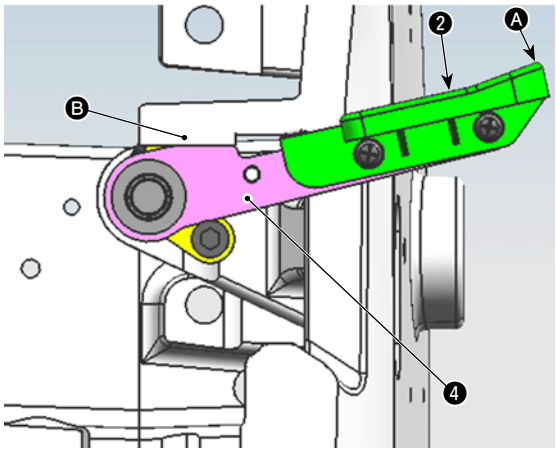


o In case of LU-2810

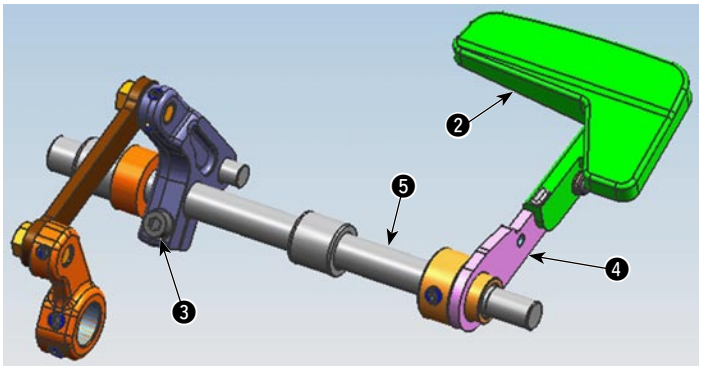


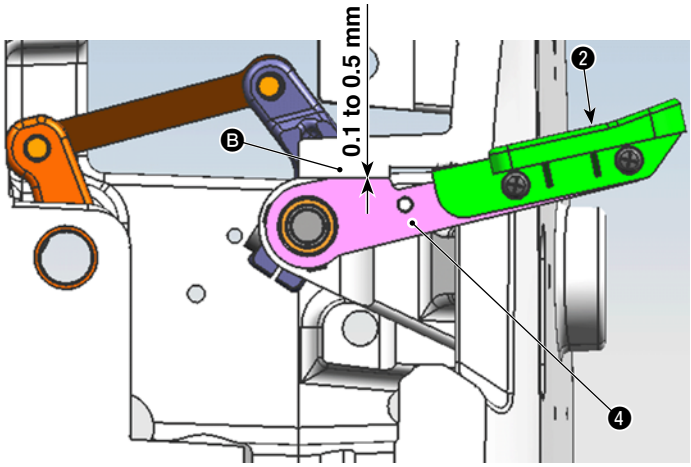

| Adjustment procedures | Results of Improper adjustment |
|---|---|
| 1. Set the stitch dial to “6”.<br>2. Loosen two setscrews ❶ of the feed adjusting eccentric pin.<br>3. Turn feed adjusting eccentric pin ❷ to adjust the stitch length.<br>o Direction A → Reverse feed pitch is increased.<br>o Direction B → Normal feed pitch is increased.<br>4. After the adjustment, securely tighten two setscrews ❶ of the feed adjusting eccentric pin.<br><br>**(Standard) When the direction of notched part of the feed adjusting eccentric pin ❷ is set to just above as shown in the illustration, the feed amounts of normal and reverse feeds are nearly the same.** | o Respective stitch lengths of normal and reverse feeds do not match. |

| Adjustment procedures | Results of Improper adjustment |
|---|---|
| o In case of LU-2810-7<br>1. Set the stitch dial to the maximum.<br>2. Loosen clamping screw ❶ of the reverse feed connecting arm.<br>3. Adjust so that a play of top end Ⓐ of the reverse feed control lever ❷ is 1 ± 0.5 mm. Then tighten clamping screw ❶ of the reverse feed connecting arm.<br><br>o In case of LU-2810<br>1. Set the stitch dial to the maximum.<br>2. Loosen clamping screw ❸ of the feed adjusting pin support arm.<br>3. Turn the reverse feed lever shaft ❺ to adjust so that a clearance between the reverse feed lever plate ❹ and the stopper part Ⓑ of machine arm is 0.1 to 0.5 mm. Then tighten clamping screw ❸ of the feed adjusting pin support arm.<br><br>**(Caution) Check that the reverse feed control lever ❷ does not interfere with the machine bed or machine arm when the stitch dial is set to the maximum.** | When the position of the reverse feed control lever ❷ is low :<br>o Reverse feed lever plate ❹ interferes with the machine arm and the stitch length of the reverse feed stitching will be decreased.<br>When the position of the reverse feed control lever ❷ is high :<br>o Reverse feed lever plate ❹ interferes with the stopper part Ⓑ of machine arm, or reverse feed control lever ❷ interferes with machine arm, and stitch length of the normal feed stitching will be decreased. |

## (12) Safety clutch

**WARNING :**
**Turn OFF the power before starting the work so as to prevent accidents caused by abrupt start of the sewing machine.**

### Standard adjustment

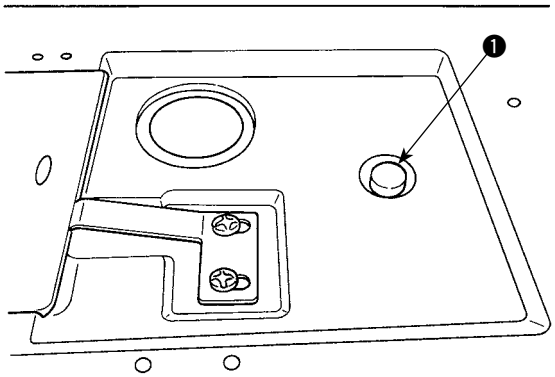


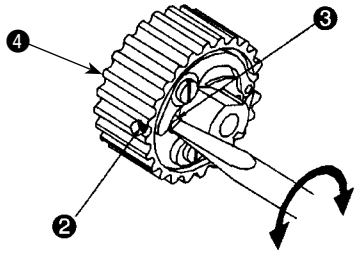


* Standard of release pressure

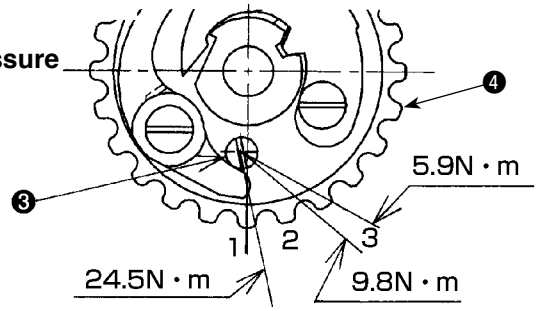


## (13) Balancer

**WARNING :**
**Turn OFF the power before starting the work so as to prevent accidents caused by abrupt start of the sewing machine.**

### Standard adjustment

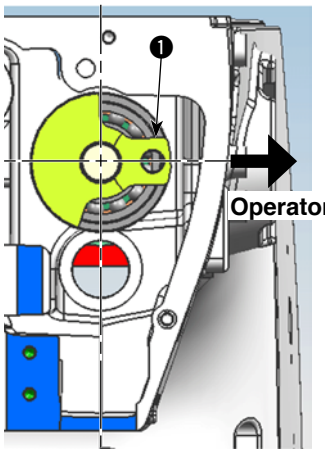


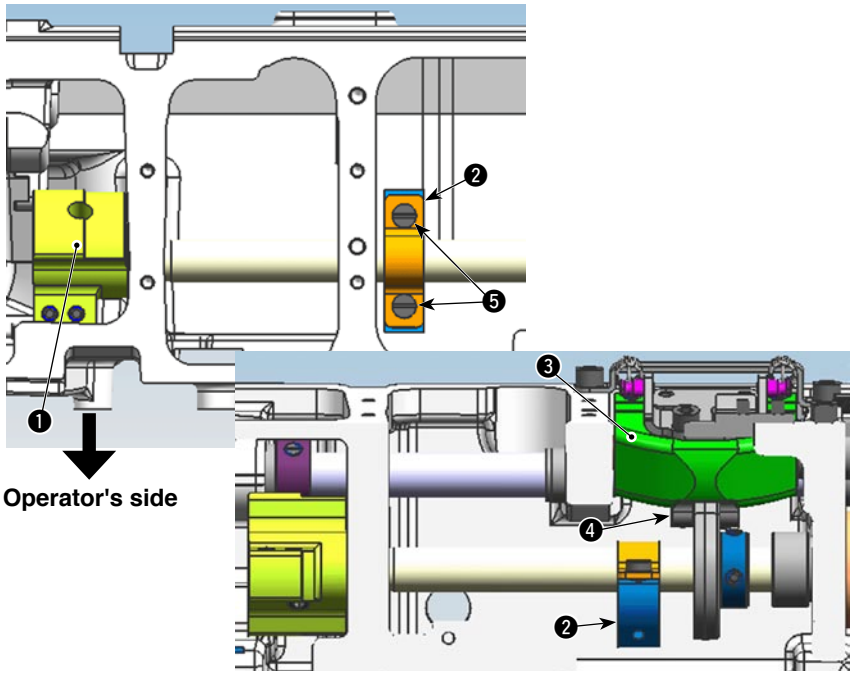

| Adjustment procedures | Results of Improper adjustment |
|---|---|
| The safety clutch functions when an excessive load is applied to the lower shaft or the like during sewing. When the safety clutch functions, the hook will not rotate even if turning the handwheel, and the lower shaft sprocket wheel ❹ only will run idle since the power is not transmitted to the lower shaft.<br>o Resetting procedure<br>1. Checking the moving part of the sewing machine, and look for and remove the cause which the safety clutch has functioned.<br>2. Pressing push button ❶ located on the top surface of the machine bed, strongly turn the handwheel in the reverse direction of rotation.<br>3. Resetting procedure completes when the handwheel cannot be turned with “click”.<br>o Adjusting the working torque of the safety clutch<br>1. Tilt the machine head.<br>2. Loosen setscrew ❷ located at the periphery of lower shaft sprocket wheel ❹ and turn release pressure adjusting pin ❸ to adjust the release torque. After the adjustment, tighten setscrew ❷ to fix release pressure adjusting pin ❸.<br>*** Standard of release pressure**<br>When the direction of the slot in release pressure adjusting pin ❸ is located near the places below, the relevant release pressure is obtained.<br>o 24.5 N • m : Top of tooth of 1st sprocket<br>o 9.8 N • m : Center of bottom between 2nd and 3rd sprockets<br>o 5.9 N • m : Top of tooth of 3rd sprocket | |

| Adjustment procedures | Results of Improper adjustment |
|---|---|
| 1. Loosen setscrews of the face plate to remove the face plate.<br>2. Turn the handwheel so that the counterweight ❶ faces toward you.<br>3. Place the balancer ❷ in the position shown in the figure.<br>At this time, make a clearance so that the balancer ❷ do not interfere with machine frame, top feed changing base ❸ and connecting link ❹.<br>4. Evenly and securely tighten two setscrews ❺ of balancer. | o Vibration becomes big. |

## (14) Reverse feed cylinder

**WARNING :**
**Turn OFF the power before starting the work so as to prevent accidents caused by abrupt start of the sewing machine.**

### Standard adjustment

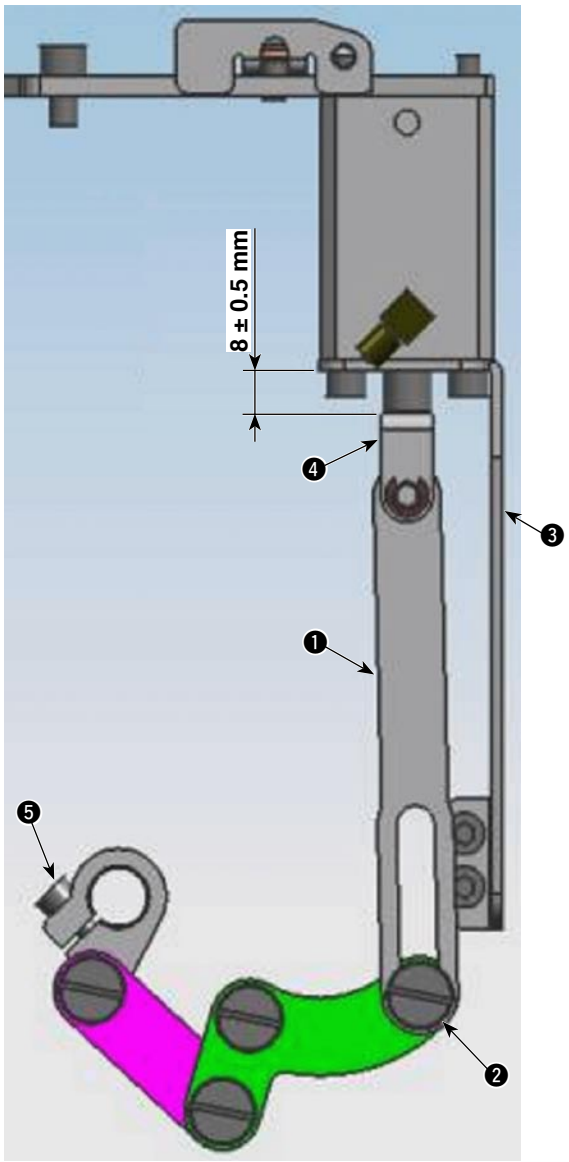

| Adjustment procedures | Results of Improper adjustment |
|---|---|
| 1. Set the stitch dial to the maximum.<br>2. Loosen clamping screw ❺ of the reverse feed arm.<br>3. Operate the reverse feed control lever to adjust so that the distance between the cylinder support ❸ and the cylinder knuckle ❹ is 8 ± 0.5 mm in the state that the bottom of elongated hole of the reverse feed link ❶ is in contact with the hinge screw ❷. Then tighten clamping screw ❺ of reverse feed arm. | o Stitch lengths of the reverse feed may not be obtained. |

## (15) Lubrication

**WARNING :**
**Turn OFF the power before starting the work so as to prevent accidents caused by abrupt start of the sewing machine.**

### Standard adjustment

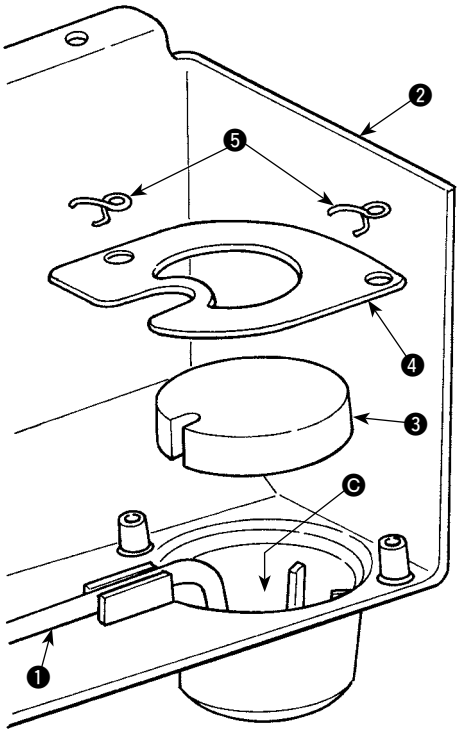


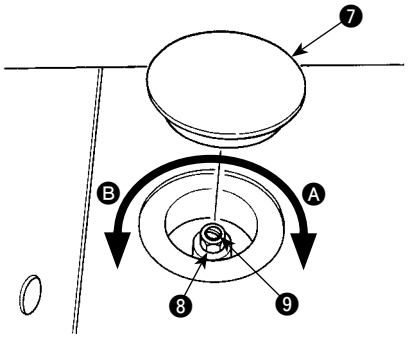


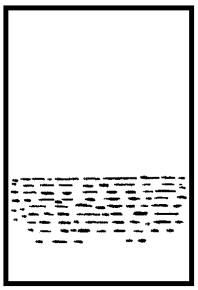

A sheet of paper

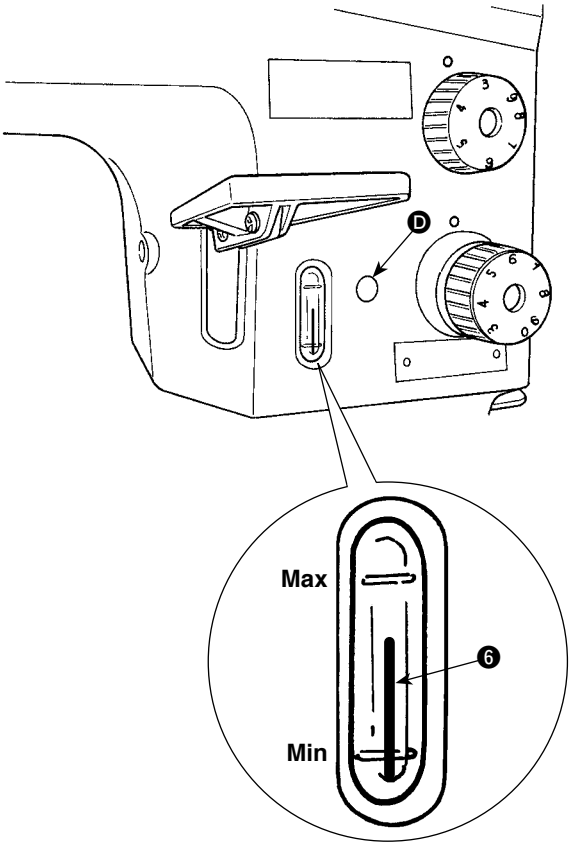


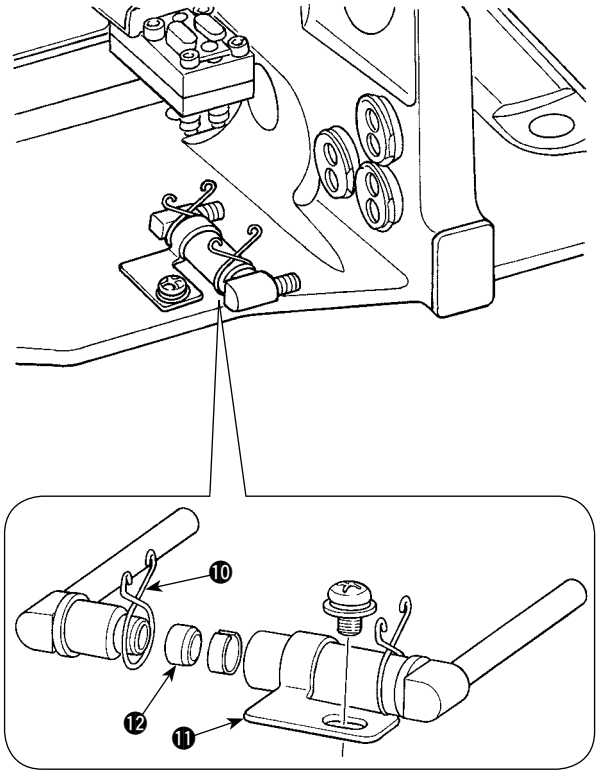

| Adjustment procedures | Results of Improper adjustment |
|---|---|
| o Lubrication procedure<br>1. Add oil from section Ⓓ.<br>2. If the pointer of oil gauge ❻ drops below Min line, lubricate again.<br>**(Caution) Adjust the oil quantity so that the pointer of oil gauge ❻ stays between Max and Min.**<br><br>o Adjusting the amount of oil in the hook<br>1. Remove rubber cap ❼.<br>2. Loosen nut ❽ and turn oil amount adjustment screw ❾ to adjust the amount of oil in the hook.<br>Turning the screw clockwise Ⓐ will decrease the amount of oil in the hook or counterclockwise Ⓑ will increase it.<br>3. The appropriate amount of oil, when a sheet of paper is placed near the periphery of the hook, is to such an extent that splashes of oil from the hook appear in approximately five seconds as shown in a sheet of paper.<br><br>o Cleaning the oil pan and filter<br>1. Remove clips ❺ to remove filter clamp ❹.<br>2. Remove filter ❸ and oil pipe ❶.<br>3. Clean up filter ❸ and oil reservoir Ⓒ of the oil pan ❷.<br>4. Insert the oil pipe ❶ and filter ❸ into oil reservoir Ⓒ of the oil pan ❷.<br>5. Set the filter clamp ❹ to oil pan ❷, and fix it with the clip ❺.<br>6. Pour the JUKI New Defrix Oil No. 1 into the oil tank.<br>**(Caution) Adjust the oil quantity so that the pointer of oil gauge ❻ stays between Max and Min.**<br><br>o Cleaning the oil filter<br>1. Remove metal fixture ❿.<br>2. Remove filter holder ⓫.<br>3. Clean up filter ⓬.<br><br>**(Caution) 1. Be sure to clean up the oil pan ❷ approximately once a month.**<br>**2. If filters ❸ and ⓬ is clogged with soil, lubrication fails resulting in trouble.** | When the amount of oil is short :<br>o Loose stitches will result.<br>o Hook is heated resulting in seizure.<br>When the amount of oil is too much :<br>o Thread is stained with oil. In addition, the cloth may be stained.<br>o Trouble of sewing will be caused. |

## (16) Thread trimmer device

**WARNING :**
**Turn OFF the power before starting the work so as to prevent accidents caused by abrupt start of the sewing machine.**

### Standard adjustment

#### 1) Position of the counter knife and the clamp spring

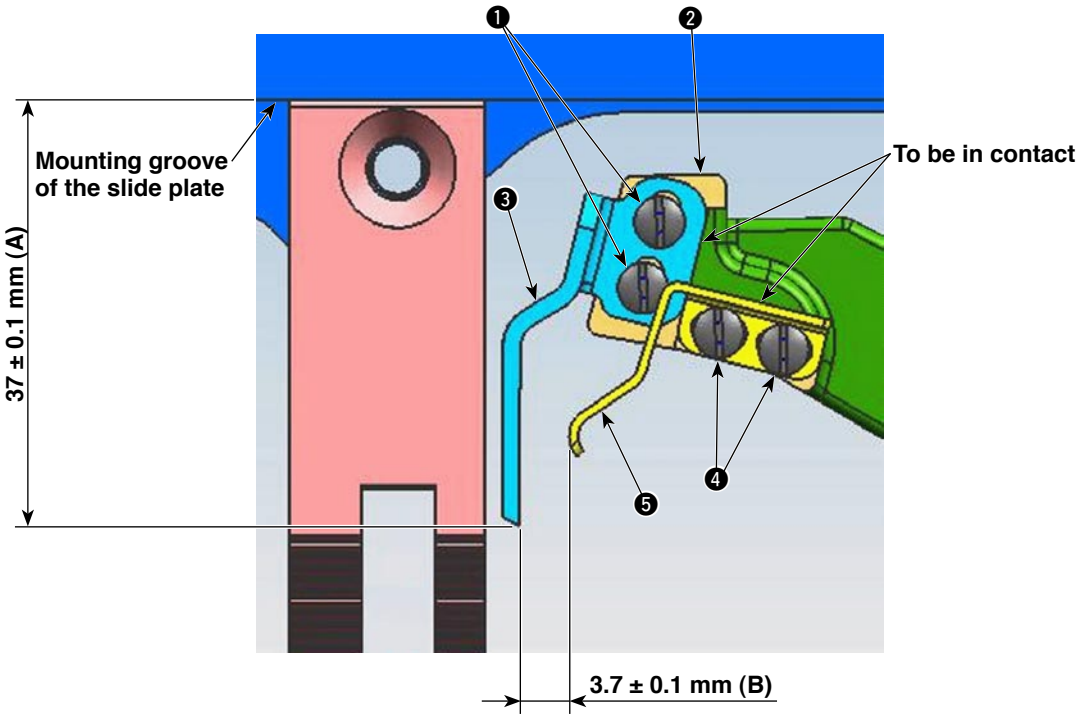

| Adjustment procedures | Results of Improper adjustment |
|---|---|
| **1) Position of the counter knife and the clamp spring**<br>[Position of the counter knife]<br>1. Loosen setscrews ❶ of the counter knife.<br>2. Press the edge of counter knife ❸ against the step difference of counter knife base ❷.<br>3. Adjust so that the distance from mounting groove of the slide plate to top end of the counter knife ❸ is 37 ± 0.1 mm (A).<br>4. Tighten setscrews ❶ of the counter knife.<br><br>[Position of the clamp spring]<br>1. Loosen setscrews ❹ of the clamp spring.<br>2. Press the edge of clamp spring ❺ against the step difference of counter knife base ❷.<br>3. Slide the clamp spring ❺ while making it press against the step difference of the counter knife base ❷, and adjust the distance to 3.7 ± 0.1 mm (B).<br>4. Tighten setscrews ❹ of the clamp spring.<br><br>**(Caution) When the position of counter knife ❸ and clamp spring ❺ is moved, re-adjust the position of counter knife base ❷ and the knife pressure.** | When dimension A is larger :<br>o Length of bobbin thread clamp is shortened and stitch skipping occurs.<br>o Setting/taking out bobbin cannot be performed.<br>When dimension A is smaller :<br>o Thread trimming failure will be caused.<br><br>When dimension B is larger :<br>o Bobbin thread clamp failure occurs.<br>o Stitch skipping at the start of sewing will be caused.<br>When dimension B is smaller :<br>o It is difficult to take out cloth since needle thread have been clamped, and the trouble that bobbin thread clamp is simultaneously removed will be caused.<br>o Clamp spring interferes with the rear edge of moving knife. As a result, deformation of clamp spring or the like occurs. |

**WARNING :**
**Turn OFF the power before starting the work so as to prevent accidents caused by abrupt start of the sewing machine.**

## Standard adjustment

### 2) Position of the counter knife base

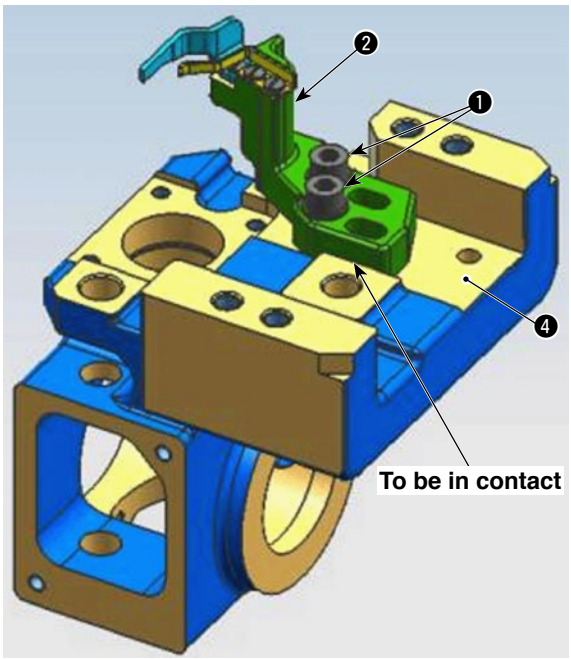


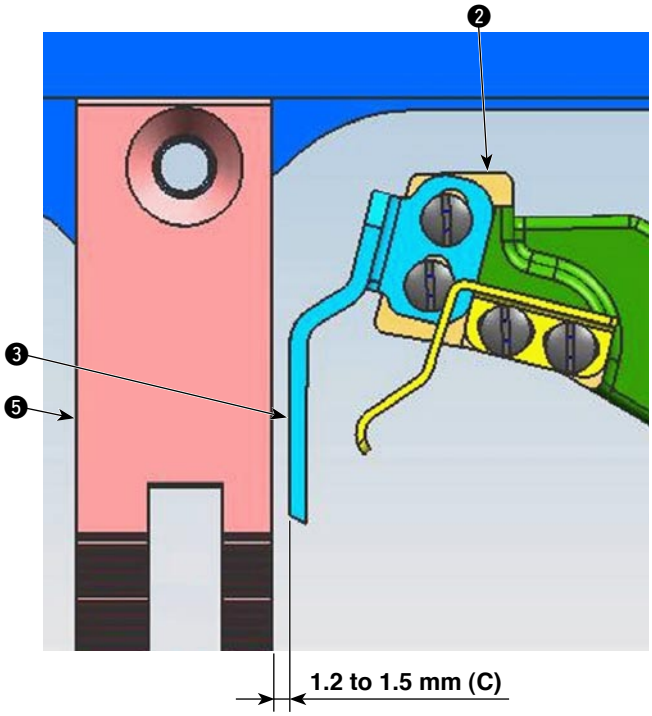


### 3) Vertical position of the moving knife

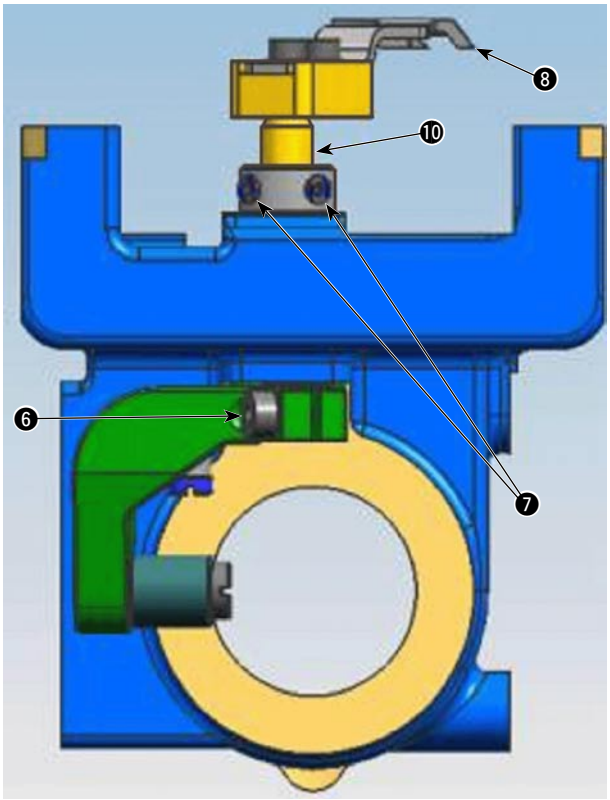


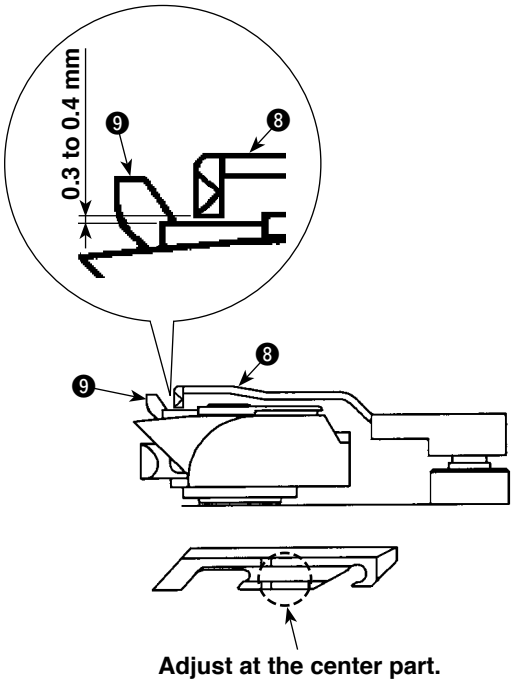

| Adjustment procedures | Results of Improper adjustment |
|---|---|
| **2) Position of the counter knife base**<br>1. Loosen setscrews ❶ of the counter knife base.<br>2. Move the counter knife base ❶ to the position as shown in the figure.<br>For the longitudinal position, press the edge of counter knife base ❷ against the step difference of the hook shaft base ❹.<br>For the lateral direction, adjust so that the distance from the throat plate ❺ to the counter knife ❸ is 1.2 to 1.5 mm (C), then tighten setscrews ❶ of the counter knife base.<br><br>**(Caution) When the counter knife base ❷ is moved, re-adjust the knife pressure.** | When dimension C is larger :<br>o Knife pressure is increased. As a result, motor stop will be caused.<br>o Setting/taking out bobbin cannot be performed.<br>o Counter knife base interferes with the rear end of moving knife. As a result, moving knife and counter knife ❸ will be broken.<br>When dimension C is smaller :<br>o Knife pressure is decreased. As a result, thread trimming failure occurs.<br>o Moving knife interferes with the hook stopping section. As a result, thread trimming failure occurs or moving knife is broken. |
| **3) Vertical position of the moving knife**<br>1. Loosen clamping screw ❻ of the moving knife driving arm.<br>2. Loosen setscrews ❼ of the moving knife shaft thrust collar.<br>3. Adjust so that the clearance between the center part of bottom end of moving knife ❽ and inner hook ❾ is 0.3 to 0.4 mm, then tighten setscrews ❼ of the moving knife shaft thrust collar.<br>4. Tighten clamping screw ❻ of the moving knife driving arm so that there is no thrust play at the moving knife shaft ❿.<br><br>**(Caution) Adjust the height of moving knife ❽ at the center part of moving knife ❽.** | When the clearance is larger :<br>o Clamp failure of needle thread and bobbin thread occurs.<br>When the clearance is smaller :<br>o Moving knife ❽ interferes with the inner hook ❾.<br>o There is no clearance where thread enters between moving knife ❽ and inner hook ❾. As a result, thread trimming failure will be caused. |

**WARNING :**
**Turn OFF the power before starting the work so as to prevent accidents caused by abrupt start of the sewing machine.**

## Standard adjustment

### 4) Thread trimmer cam timing

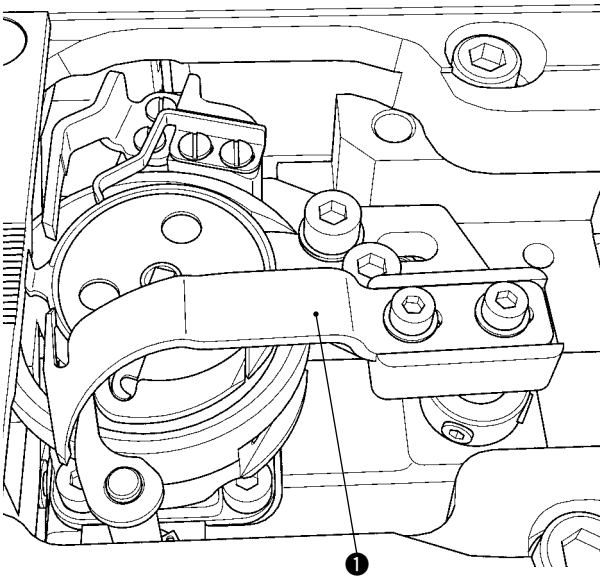


**Most advanced position of moving knife**

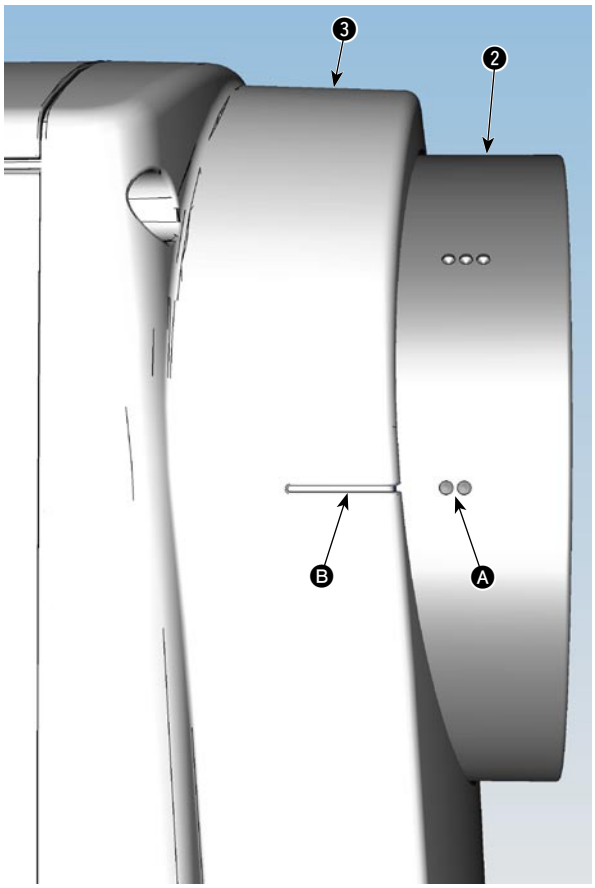


[Conditions]

- Two marker dots on the handwheel aligns with marker line on the motor cover.

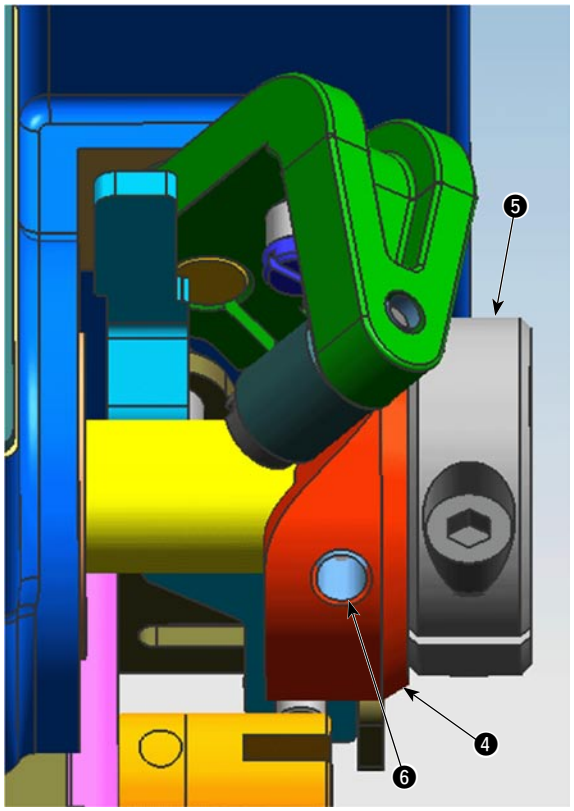

| Adjustment procedures | Results of Improper adjustment |
|---|---|
| **4) Thread trimmer cam timing**<br>1. Loosen setscrews ❻ of the thread trimmer cam.<br>2. Move the moving knife ❶ to most advanced position.<br>3. Turn the handwheel ❷ in the state of step 2. to two marker dots Ⓐ on the handwheel ❷ aligns with marker line Ⓑ on the motor cover ❸.<br>4. Make the thread trimmer cam ❹ come in close contact with the lower shaft set collar ❺, then tighten setscrews ❻ of the thread trimmer cam.<br><br>**(Caution) Check that the edge of thread trimmer cam ❹ comes in close contact with the edge of lower shaft set collar ❺.** | When thread trimming timing is retarded :<br>o Thread trimming action does not complete even at the needle-up stop position. As a result, defective thread trimming will be caused.<br>When thread trimming timing is advanced :<br>o Defective thread trimming will be caused.<br>o Length of thread remaining on the needle after thread trimming cannot be secured. As a result, needle thread may slip off after thread trimming or at the start of sewing.<br>o Stitch skipping at the start of sewing will be caused. |

**WARNING :**
**Turn OFF the power before starting the work so as to prevent accidents caused by abrupt start of the sewing machine.**

## Standard adjustment

### 5) Position of the thread trimmer cam

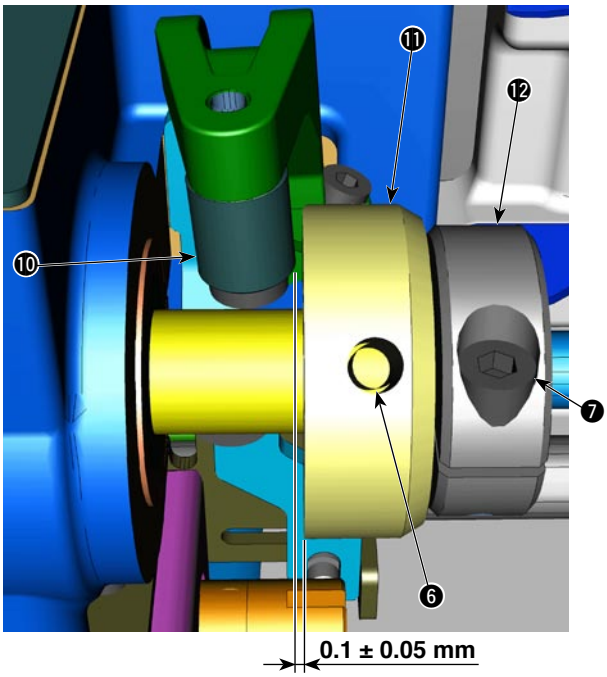


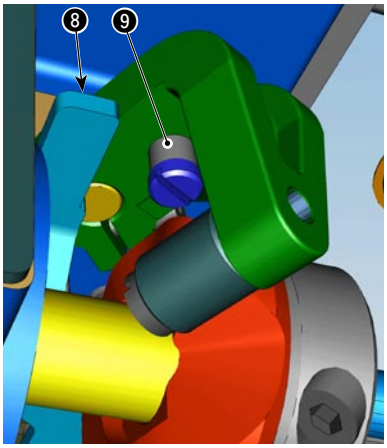


### 6) Adjusting the knife pressure

o Knife pressure

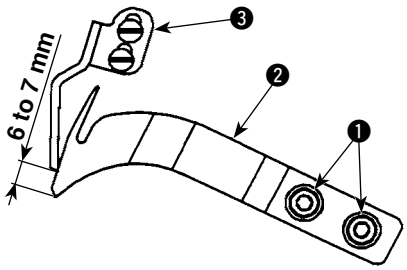


o Initial position

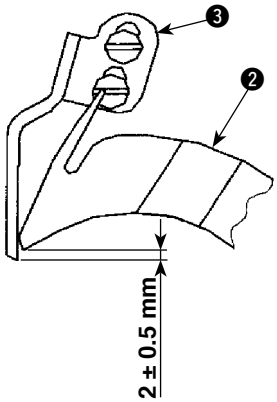


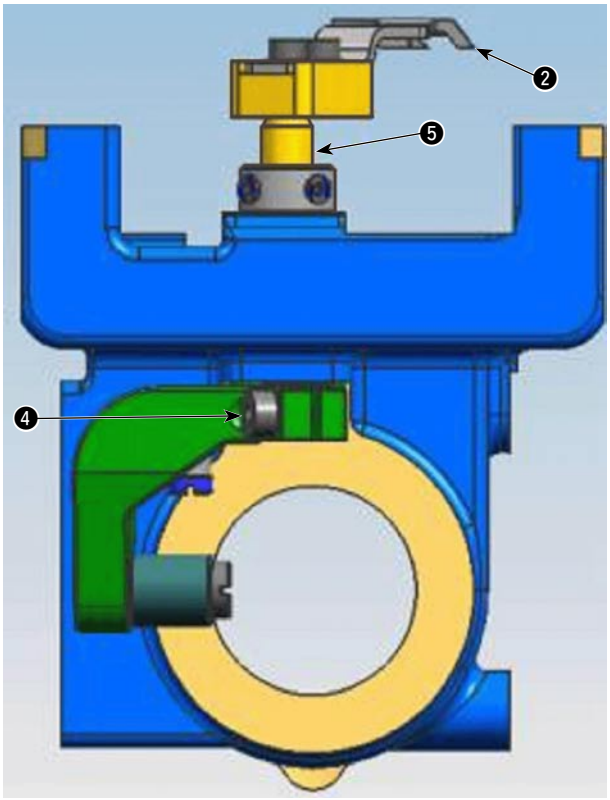

| Adjustment procedures | Results of Improper adjustment |
|---|---|
| **5) Position of the thread trimmer cam**<br>1. Loosen setscrews ❻ of the thread trimmer cam and clamping screw ❼ of the lower shaft set collar.<br>2. Set the thread trimmer solenoid to initial position.<br>3. Adjust so that the clearance between the thread trimmer cam roller ❿ and dwell section of the thread trimmer cam ⓫ is 0.1 ± 0.05 mm in the state that the moving knife driving arm link ❽ is in contact with the moving knife driving arm roller ❾. Then tighten setscrews ❻ of the thread trimmer cam.<br>4. Make the lower shaft set collar ⓬ come in close contact with the thread trimmer cam ⓫, then securely tighten clamping screw ❼ of the lower shaft set collar. | When there is no clearance between the thread trimmer cam ⓫ and the thread trimmer cam roller ❿ :<br>o Thread trimmer cam ⓫ interferes with the thread trimmer cam roller ❿ resulting in breakage or machine lock.<br>When the clearance between the thread trimmer cam ⓫ and the thread trimmer cam roller ❿ is large :<br>o Defective thread trimming will result. |
| **6) Adjusting the knife pressure**<br>o Knife pressure<br>1. Loosen setscrews ❶ of the moving knife.<br>2. Adjust the installing position of the moving knife ❷ so that the position where moving knife ❷ and counter knife ❸ start coming in contact with each other starts at the position of 6 to 7 mm from the top end of the moving knife ❷.<br>At this time, if moving knife ❷ comes in contact with the clamp spring, the knife pressure is increased by the clamp pressure. So, adjust the knife pressure in the state that the clamp pressure is not applied to the knife.<br>3. Tighten setscrews ❶ of the moving knife.<br>**(Caution) Operate the sewing machine with the knife pressure minimized to such an extent that both needle and bobbin threads can be trimmed.**<br>o Initial position<br>1. Loosen clamping screw ❹ of the moving knife driving arm.<br>2. Adjust so that the distance between the top end of the counter knife ❸ and the top end of the moving knife ❷ is 2 ± 0.5 mm when moving knife ❷ travels to its back end.<br>3. Tighten clamping screw ❹ of the moving knife driving arm so that there is no thrust play at the moving knife shaft ❺. | When the knife pressure is high :<br>o Blade sections of the counter knife ❸ and the moving knife ❷ may be damaged.<br>o Torque at the time of thread trimming is increased resulting in motor-stop.<br>o Defective thread trimming operation will result.<br>When the knife pressure is low :<br>o Defective thread trimming will result. |

## (17) Detection switch of the amount of alternate vertical movement

**WARNING :**
**Turn OFF the power before starting the work so as to prevent accidents caused by abrupt start of the sewing machine.**

### Standard adjustment

Sewing speed of LU-2810-7

| Amount of alternate vertical movement | Stitch length : 7 mm or less | Stitch length : More than 7 mm and 9 mm or less |
|---|---|---|
| Less than 3 mm | 3,000 sti/min | 2,000 sti/min |
| 3.25 mm to less than 4 mm | 2,400 sti/min | 2,000 sti/min |
| 4.25 mm to less than 5 mm | 2,000 sti/min | 2,000 sti/min |
| 5.25 mm to less than 9 mm | 1,800 sti/min | 1,800 sti/min |

**(Caution) To use the machine with the stitch length is set at more than 7 mm, adjust the sewing speed by manual.**

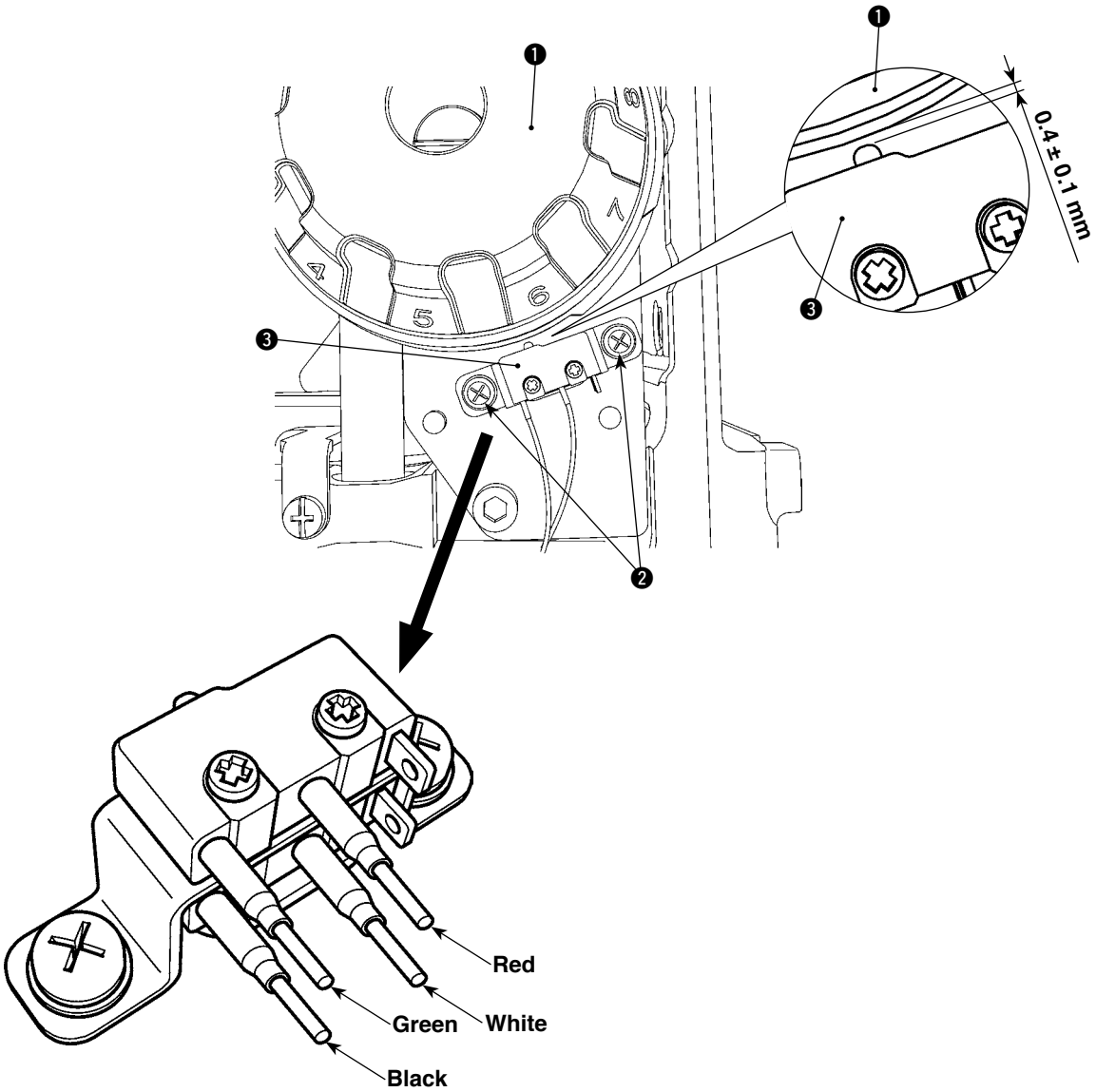


| Scale of alternate vertical dial | Switch (upper) (Red and green lines) | Switch (lower) (White and black lines) |
|---|---|---|
| 1 to 3 | OFF | OFF |
| 3.25 to 4 | OFF | ON |
| 4.25 to 5 | ON | ON |
| 5.25 to 9 | ON | OFF |

| Adjustment procedures | Results of Improper adjustment |
|---|---|
| 1. Turn the alternate vertical dial ❶ to adjust the scale between "7.5" to "8".<br>2. Loosen setscrews of the top cover to remove the top cover.<br>3. Loosen installing screws ❷ of the detection switch of the amount of alternate vertical movement, and adjust so that the distance between the detection switch of the amount of alternate vertical movement ❸ to the alternate vertical dial ❶ is 0.4 ± 0.1 mm.<br>4. Then tighten installing screws ❷ of the detection switch of the amount of alternate vertical movement.<br><br>**(Caution) When the position of the detection switch of the amount of alternate vertical movement ❸ is changed, check whether the relation between the alternate vertical dial ❶ and the sewing speed is normal.** | |

## (18) DL device

**WARNING :**
**As the work is performed while the power is ON, never touch the switches other than the necessary one so as to prevent accidents caused by the malfunction of switches.**

### Standard adjustment

The DL device is a device for maximizing the amount of alternate vertical movement when it is placed in ON.
When the cylinder is turned ON to maximize the amount of alternate vertical movement, tighten clamping screw ❸ with the alternate vertical adjusting pin pressed against the dial cam plane.

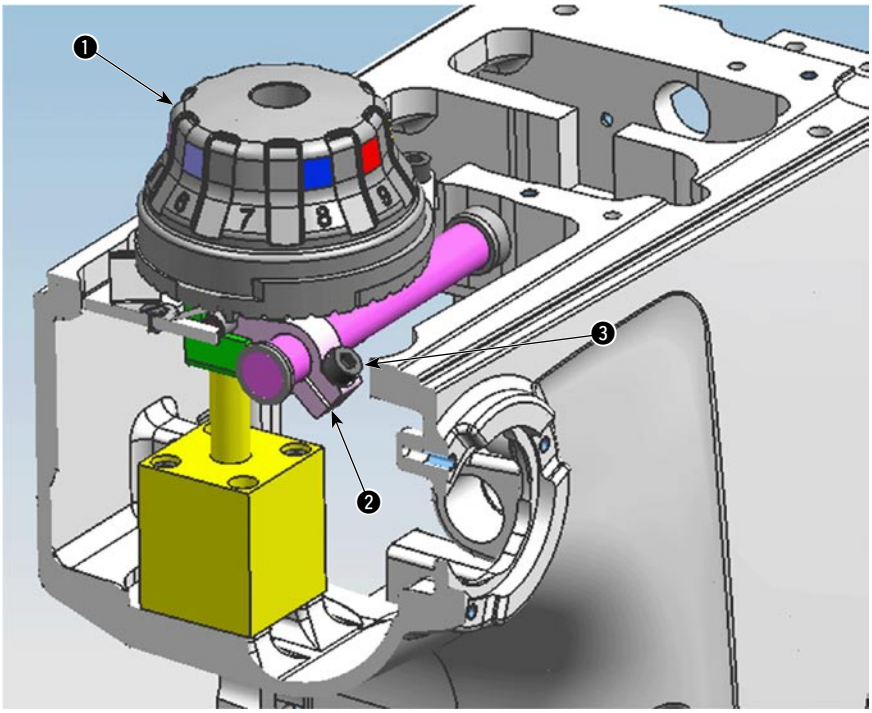


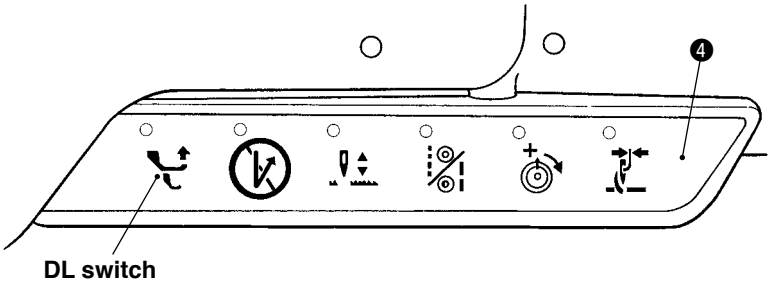

| Adjustment procedures | Results of Improper adjustment |
|---|---|
| 1. Set the alternate vertical dial ❶ to “9”.<br>2. Loosen clamping screw ❸ of the alternate vertical cylinder arm ❷.<br>3. Operate the DL device by 6-operations switch ❹ (or knee switch).<br>4. Tighten clamping screw ❸ of the alternate vertical cylinder arm ❷. | o Sewing speed may not change even when turning the alternate vertical dial ❶. |

## (19) Adjusting the bottom feed momentum

**WARNING :**
**Turn OFF the power before starting the work so as to prevent accidents caused by abrupt start of the sewing machine.**

### Standard adjustment

Standard adjustment value is the location where the momentum is minimized.
Fix hinge screw ❶ of the vertical feed rod in the slot so that it is positioned at the farthest from the vertical feed shaft.

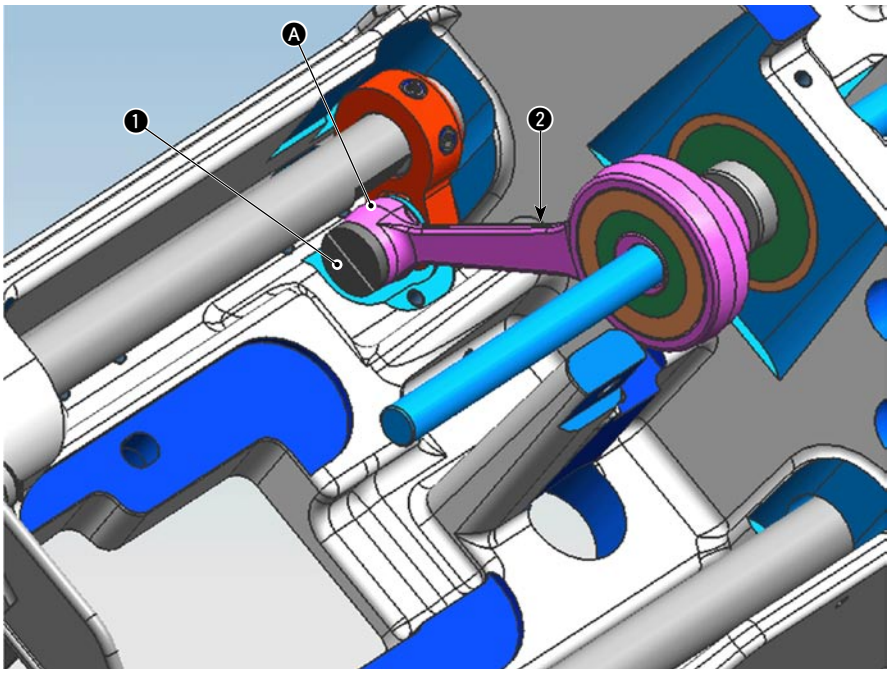

| Adjustment procedures | Results of Improper adjustment |
|---|---|
| 1. Loosen hinge screw ❶ of the vertical feed rod.<br>2. Move the boss section Ⓐ of the vertical feed cam rod ❷ to adjust the momentum.<br>3. After the adjustment, tighten hinge screw ❶ of the vertical feed rod. | |

## (20) 2P feed adjustment

**WARNING :**
**As the work is performed while the power is ON, never touch the switches other than the necessary one so as to prevent accidents caused by the malfunction of switches.**

### Standard adjustment

1) **Zero-point alignment for 2P feed adjustment**
2) **Forward/reverse stitch pitch of 2P feed adjustment**

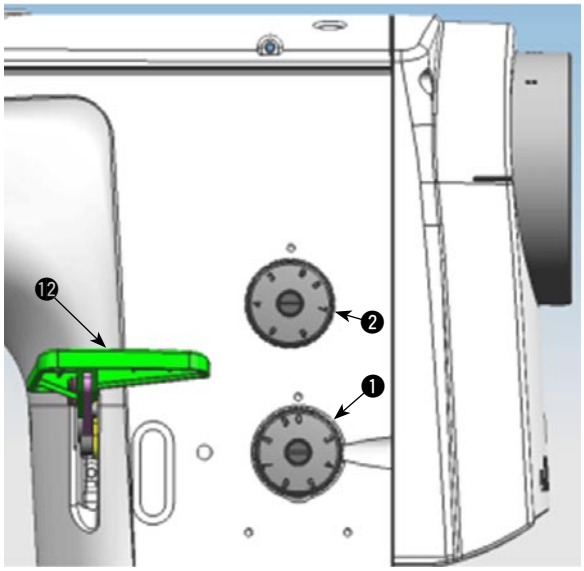


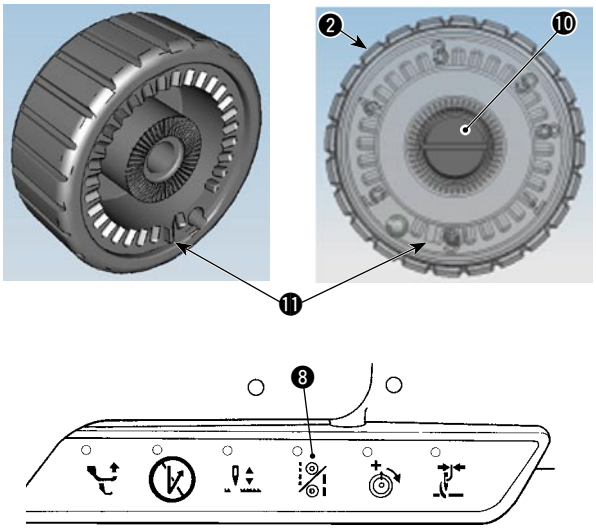


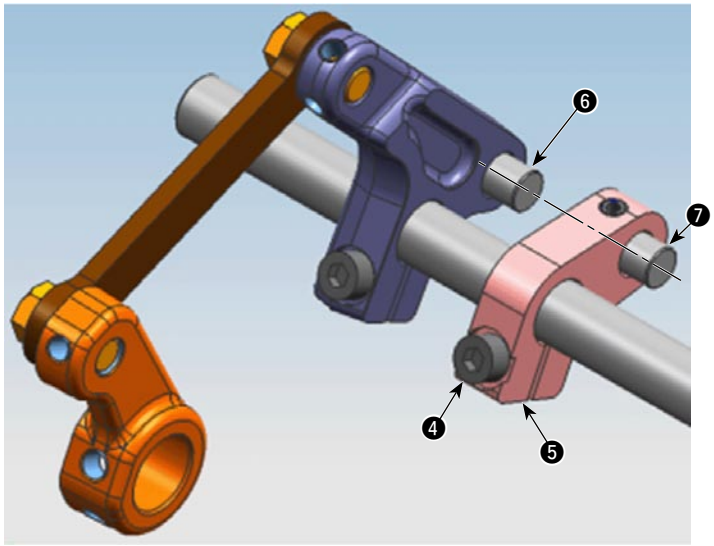


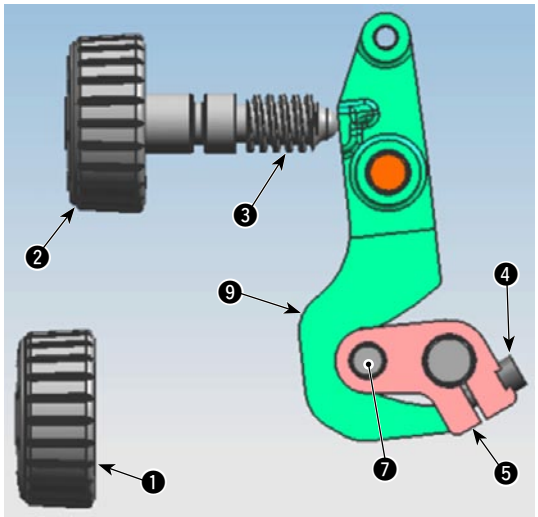


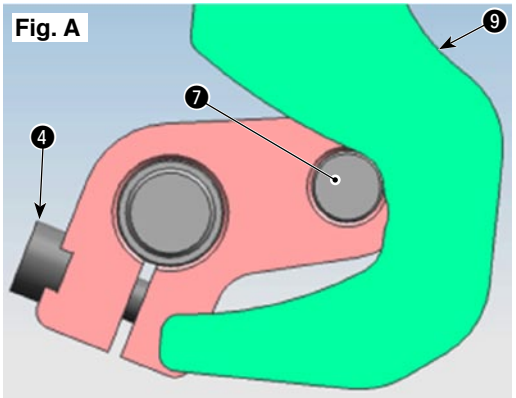


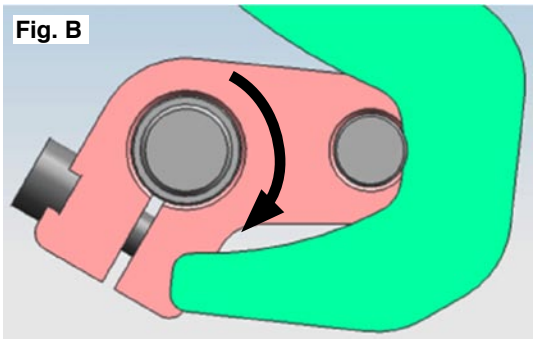

| Adjustment procedures | Results of Improper adjustment |
|---|---|
| **1) Zero-point alignment for 2P feed adjustment**<br>1. Set the standard feed adjusting dial ❶ to “0”.<br>2. Turn the 2P feed adjusting dial ❷ to counter-clockwise, remove the 2P feed adjusting dial screw ❸.<br>3. Loosen clamping screw ❹ of the 2P feed adjusting pin arm ❺. At this time, retain the 2P feed adjusting pin arm ❺ by means of a tool so that it does not move out of position. If you have moved it out of position, bring the standard feed adjusting pin ❻ and the 2P feed adjusting pin ❼ visually to the coaxial position.<br>4. Turn 2P switch ❽ ON. The air cylinder works to make the relationship between the 2P feed adjusting base ❾ and the 2P feed adjusting pin ❼ as shown in Fig. A.<br>5. Move the 2P feed adjusting pin arm ❺ to align the cam section (zero-point position) of the 2P feed adjusting base ❾ with the 2P feed adjusting pin ❼ (Fig. B). In that state, tighten clamping screw ❹ of the 2P feed adjusting pin arm ❺.<br>6. Carefully and slightly turn the 2P feed adjusting dial ❷ to clockwise until a resistance is felt so that the 2P feed adjusting dial screw ❸ is aligned with the 2P feed adjusting base ❾.<br>7. Loosen setscrew ❿ of the 2P feed adjusting dial.<br>8. Turn the 2P feed adjusting dial ❷ to counter-clockwise, align the dial stopper ⓫ to the stopper.<br>9. Tighten setscrew ❿ of the 2P feed adjusting dial.<br>[Confirmation]<br>1. Set the standard feed adjusting dial ❶ to any pitch of “0” or more.<br>2. Turn the 2P feed adjusting dial ❷ to counter-clockwise, align to 0 point alignment position (it stops at the dial stopper ⓫).<br>3. Turn ON the 2P switch ❽.<br>4. Lower the reverse feed control lever ⓬ to align the cam section (0 point position) of the 2P feed adjusting base ❾ with the 2P feed adjusting pin ❼ (Fig. B).<br>5. Turning the handwheel, check to be sure that the stitch pitch is zero (0). This shows that the zero-point alignment of the 2P feed adjustment has been correctly carried out.<br><br>**2) Forward/reverse stitch pitch of 2P feed adjustment**<br>[Confirmation items before adjustment]<br>• Make sure that the forward/reverse feed adjustment is matching.<br>• Set the standard feed adjusting dial ❶ to “9”. (Set the 2P feed adjusting dial to standard pitch “6”.)<br>1. Loosen clamping screw ❹ of the 2P feed adjusting pin arm ❺ from the rear plate side.<br>2. Bring the standard feed adjusting pin ❻ and the 2P feed adjusting pin ❼ visually to the coaxial position. Then tighten clamping screw ❹ of the 2P feed adjusting pin arm ❺.<br>3. Turn ON the 2P switch ❽, and check pitches of forward and reverse stitches.<br>• When forward feed pitches are large. ⇒ To step 4.<br>• When reverse feed pitches are large. ⇒ To step 7.<br>4. Return to standard pitch (Turn OFF the 2P switch ❽.), loosen clamping screw ❹ of the 2P feed adjusting pin arm ❺. (Be careful to loosen too much.)<br>5. Fixing the 2P feed adjusting pin arm ❺ so that it does not move out of position, slightly tilt the reverse feed control lever ⓬ and tighten clamping screw ❹ of the 2P feed adjusting pin arm ❺.<br>6. Return to step 3., check pitches of forward and reverse stitches.<br>7. Return to standard pitch (Turn OFF the 2P switch ❽.), loosen clamping screw ❹ of the 2P feed adjusting pin arm ❺. (Be careful to loosen too much.)<br>8. Slightly turn the 2P feed adjusting pin arm ❺ in the direction of the arrow in Fig. B, and tighten clamping screw ❹ of the 2P feed adjusting pin arm ❺.<br>9. Return to step 3., check pitches of forward and reverse stitches. | |

## 3. Portion to which LOCKTITE is applied

LOCKTITE has been applied to the following parts at the time of assembly at the factory.
Avoid disassembling these parts to the most. When an assembly which includes the aforementioned parts has been forced to be disassembled, be sure to wash the LOCKTITE applied part using a paint thinner or the like, and reassemble it using LOCKTITE after removing any moisture from the mating faces.
If it is hard to remove a part which has been fixed using LOCKTITE, heat it using a torch lamp or the like to help remove the part.

| No. | Portion to which LOCKTITE is applied | Part No. | LOCKTITE No. |
|---|---|---|---|
| 1 | Set screw of coupling | SM8050812TP | LOCKTITE #243 |

**No. 1**

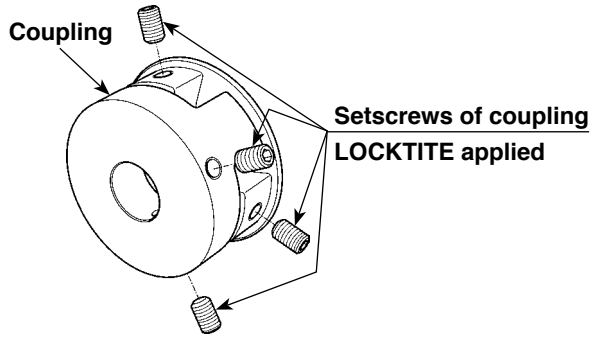

# 4. Selective parts and consumable parts

o Selective parts

| Part name | Part No. | Remarks |
|---|---|---|
| Hook shaft selective washer | B255728000A | t=1.15 to 1.2 mm |
| Hook shaft selective washer | B255728000B | t=1.05 to 1.1 mm |
| Hook shaft selective washer | B255728000C | t=0.9 to 0.95 mm |
| Hook shaft selective washer | B255728000D | t=0.8 to 0.85 mm |
| Hook shaft selective washer | B255728000E | t=0.975 to 1.025 mm |

o Consumable parts

| Part name | Part No. | Remarks | Model |
|---|---|---|---|
| Needle | M13517B1600 | GROZ-BECKERT 135 x 17 Nm 160 | LU-2810, LU-2810-7 |
| Hook (asm.) | 40131956 | | LU-2810-7 |
| Hook (asm.) | 40126399 | | LU-2810 |
| Bobbin | 21334800 | Aluminum bobbin (with knurl) | LU-2810, LU-2810-7 |
| Moving knife | 21389200 | | LU-2810-7 |
| Counter knife | 21389309 | | LU-2810-7 |
| Clamp spring | 21389408 | | LU-2810-7 |

# 5. Applying grease

## (1) Applying grease

For the safe usage of a sewing machine, periodically apply a grease (once every 2 or 3 years for standard) to the application spots specified for each model, by means of a cotton applicator or the like. For using the SC-922, an alarming sound is generated when the time for grease-up comes. When this alarming is heard, a grease-up action has to be taken.

**(Caution)** **1. Never feed oil to the grease-up spots.**

**2. It must be noted that too much grease application may result in grease leakage from the thread take-up lever cover section or the needle bar.**

## (2) Greasing points

### 1) Needle bar rocking base

1. Remove face plate.
2. Remove rubber plugs ❶.
3. Fill grease holes with JUKI Grease A.
4. Attach rubber plugs ❶.
5. Wipe off grease that was exposed.
6. Attach face plate.

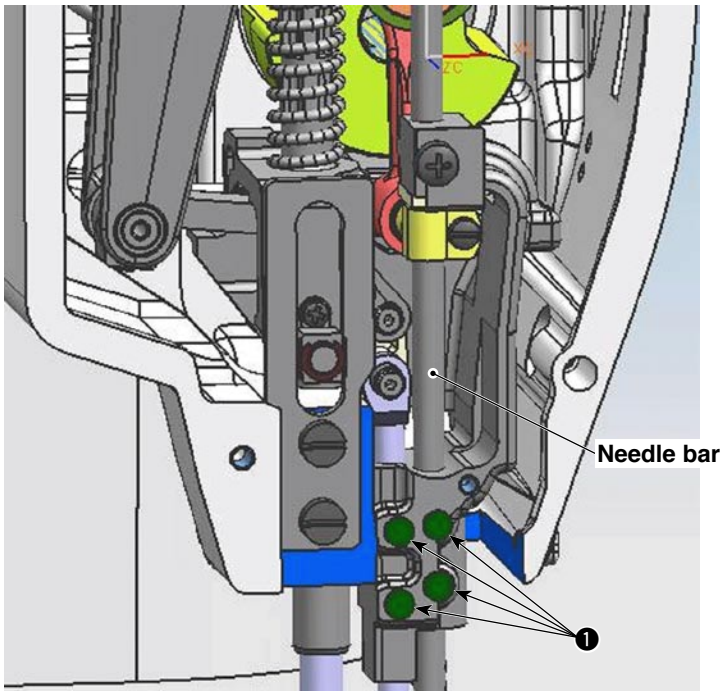


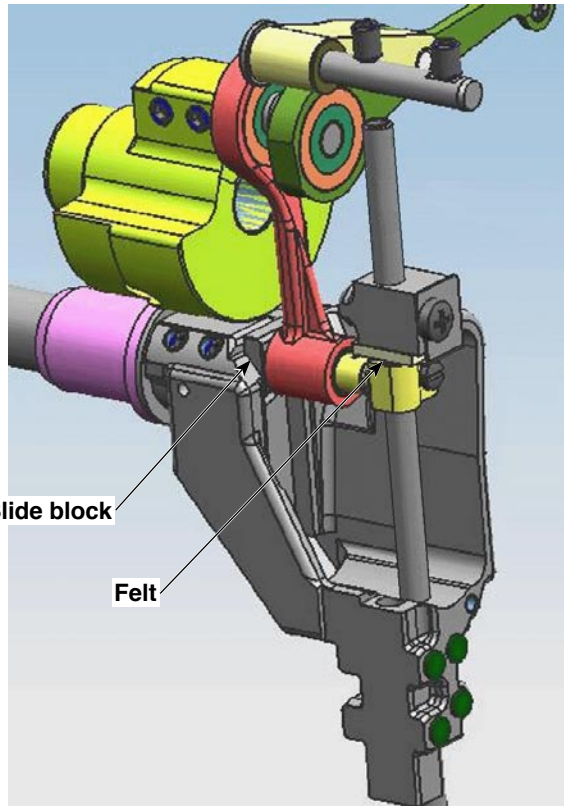

## 2) Alternate vertical change base

1. Remove top cover.
2. Remove two return springs ❹ of alternate vertical change base.
3. Loosen setscrews ❶ of felt clamp to remove felt clamp ❷.
4. Apply JUKI grease A to felt ❸.
5. Apply JUKI grease A to sliding surfaces of alternate vertical change base and feed conversion link.
6. Set felt clamp ❷ to alternate vertical change base, and fix it with setscrews ❶ of felt clamp.
7. Attach two return springs ❹ of alternate vertical change base.
8. Attach top cover.

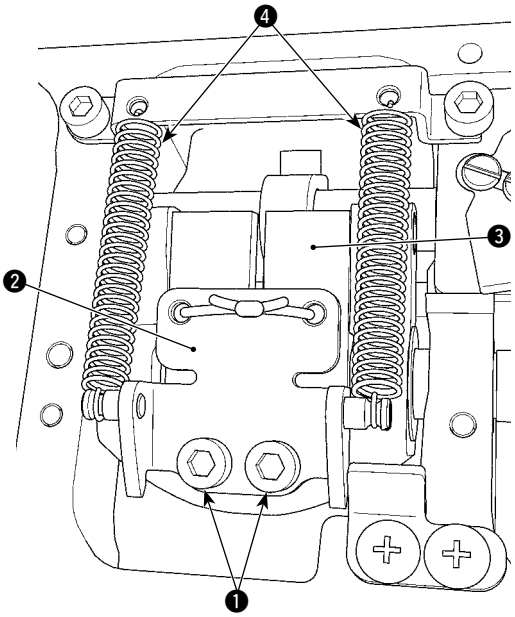


## 3) Horizontal feed change base

1. Remove rear cover.
2. Loosen setscrews ❶ of felt clamp to remove felt clamp ❷.
3. Apply JUKI grease A to felt ❸.
4. Apply JUKI grease A to sliding surfaces of horizontal feed change base and feed conversion link.
5. Set felt clamp ❷ to horizontal feed change base, and fix it with setscrews ❶ of felt clamp.
6. Attach rear cover.

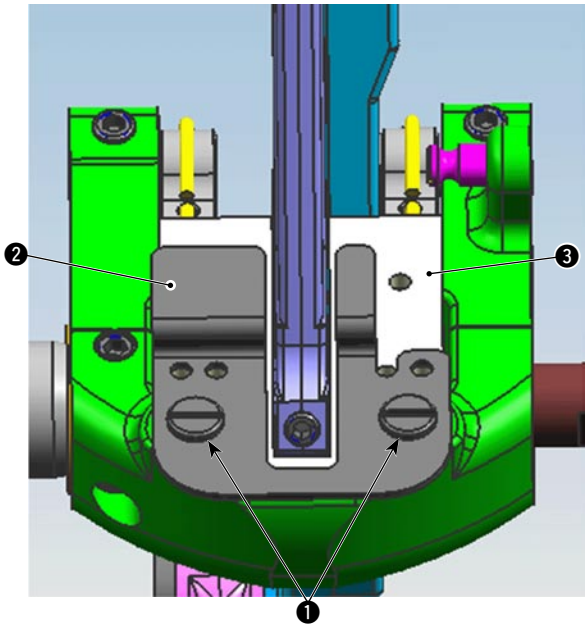

## 4) Greasing point indication drawing
## (* Indicating the points where grease is applied at shipment.)

❶ : JUKI Grease A
❷ : Unirex N3
❸ : Barch L1002

1. MAIN SHAFT & THREAD TAKE-UP LEVER COMPONENTS

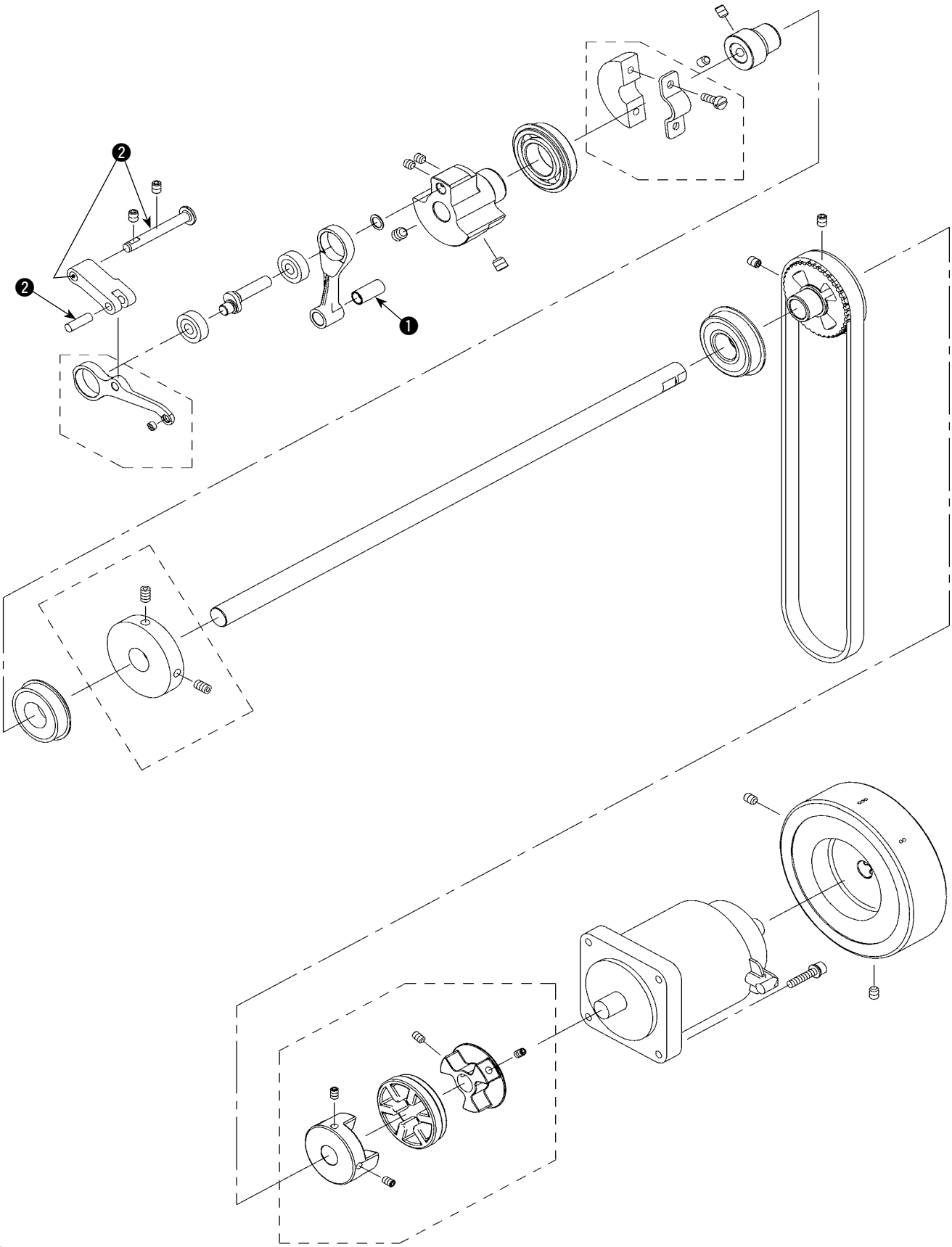

2. NEEDLE BAR COMPONENTS

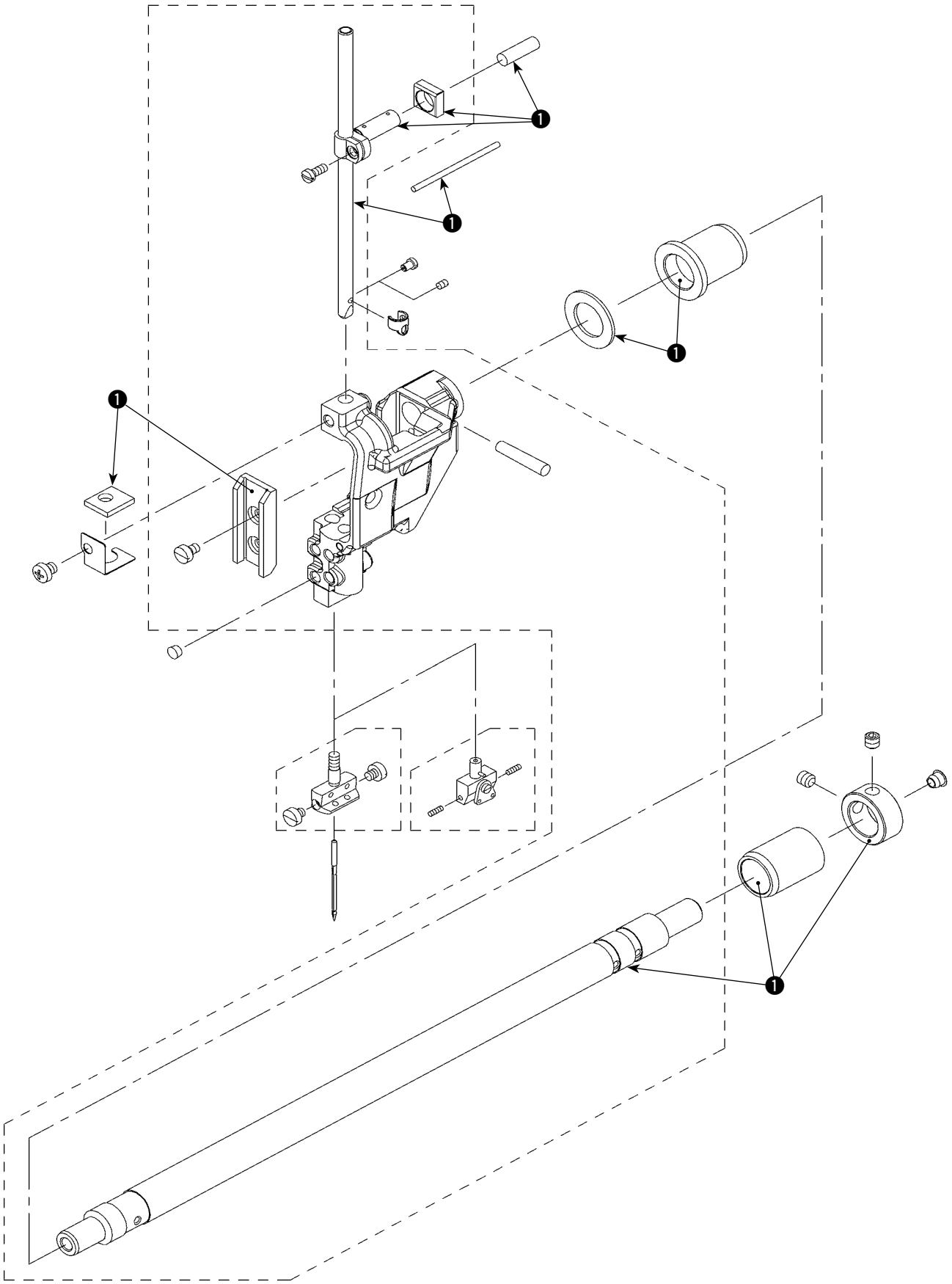

3. HOOK & OPENNER COMPONENTS

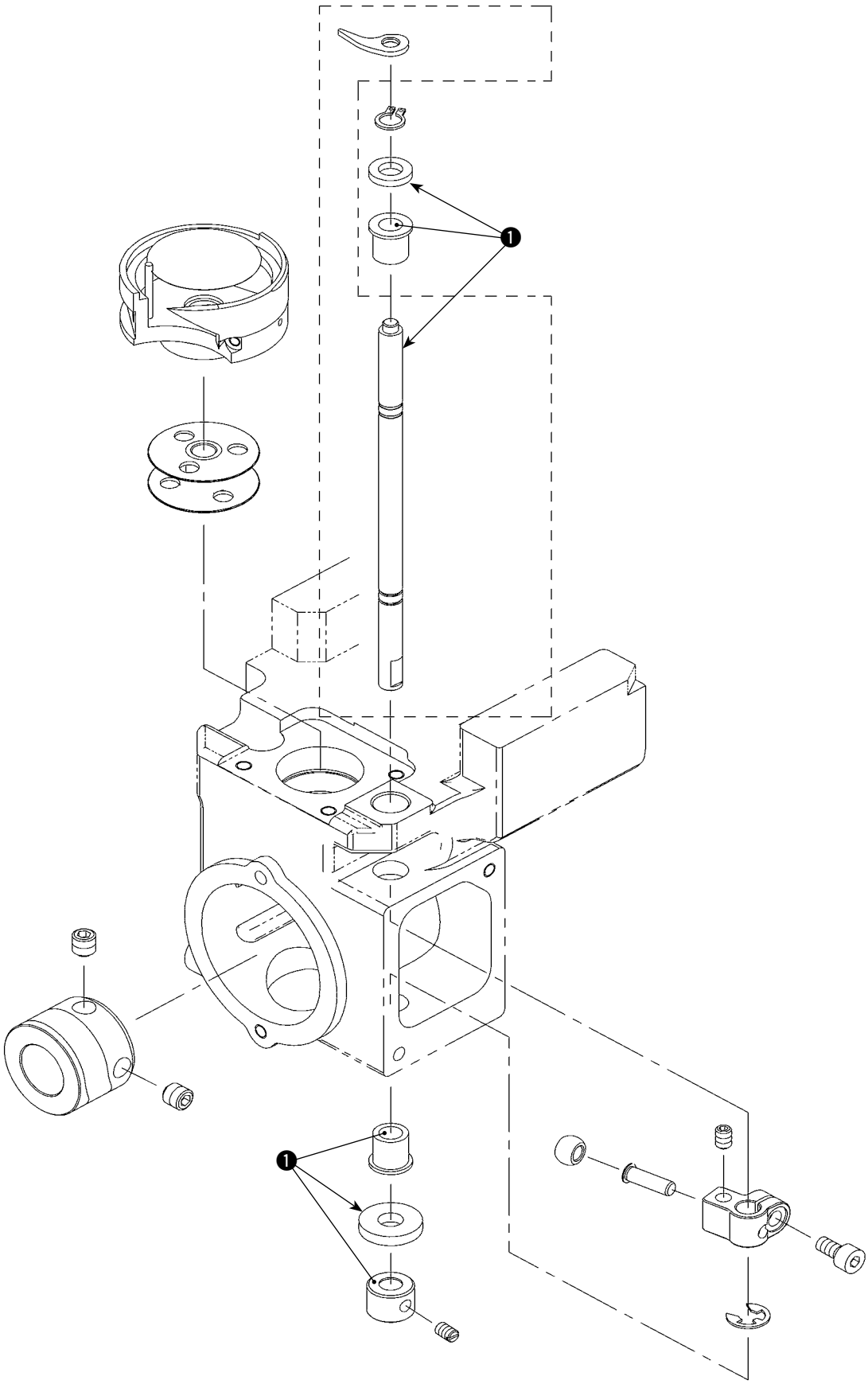

4. UPPER FEED COMPONENTS

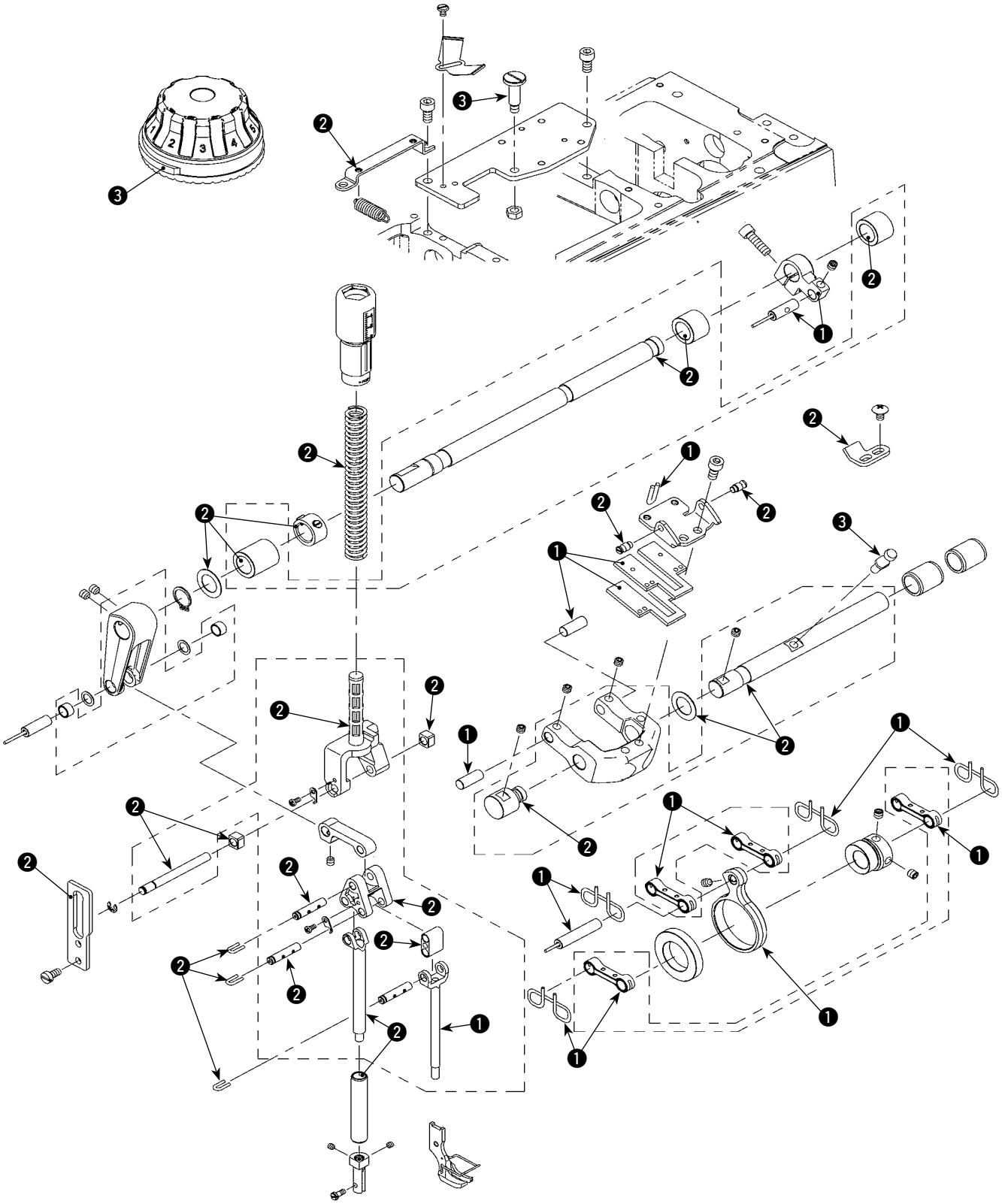

5. HAND LIFTER & AUTO LIFTER COMPONENTS

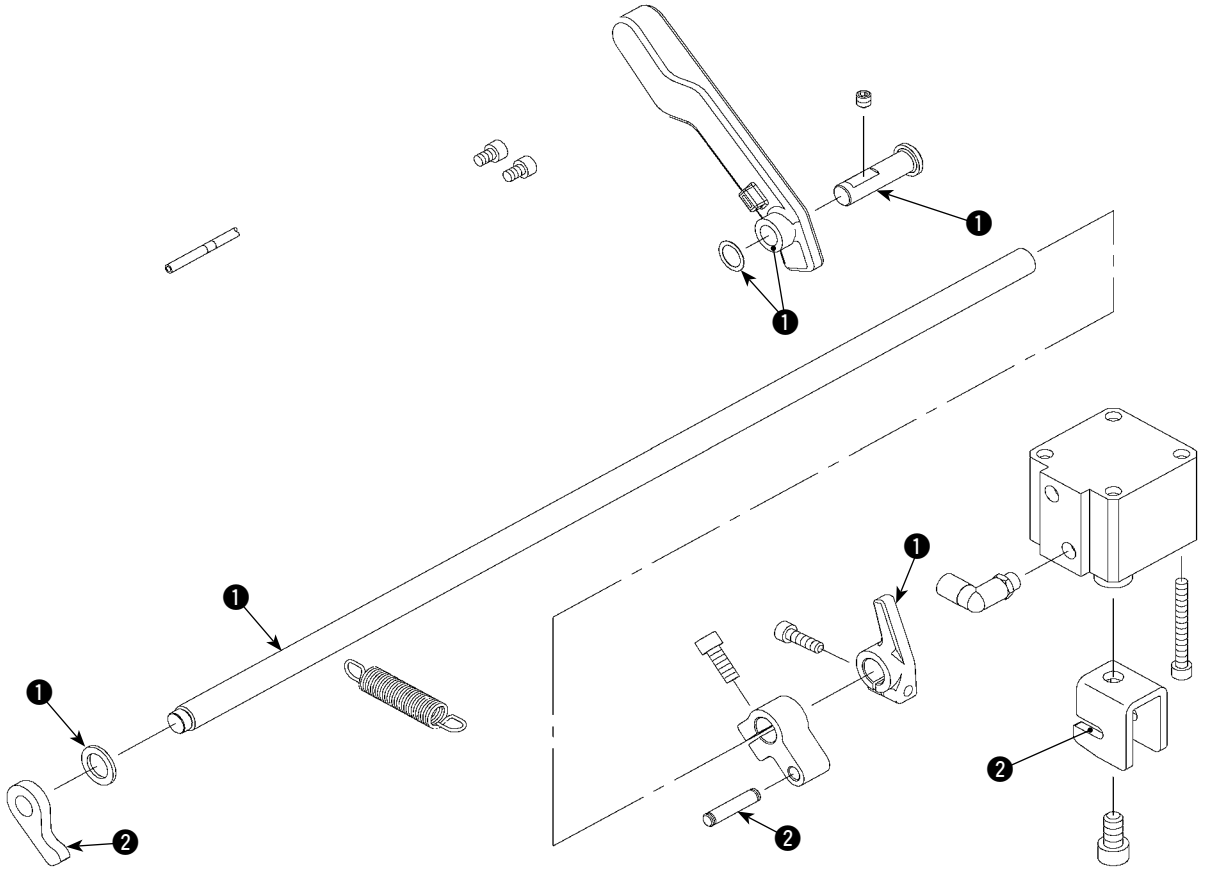

6. KNEE LIFTER COMPONENTS (FOR LU-2810)

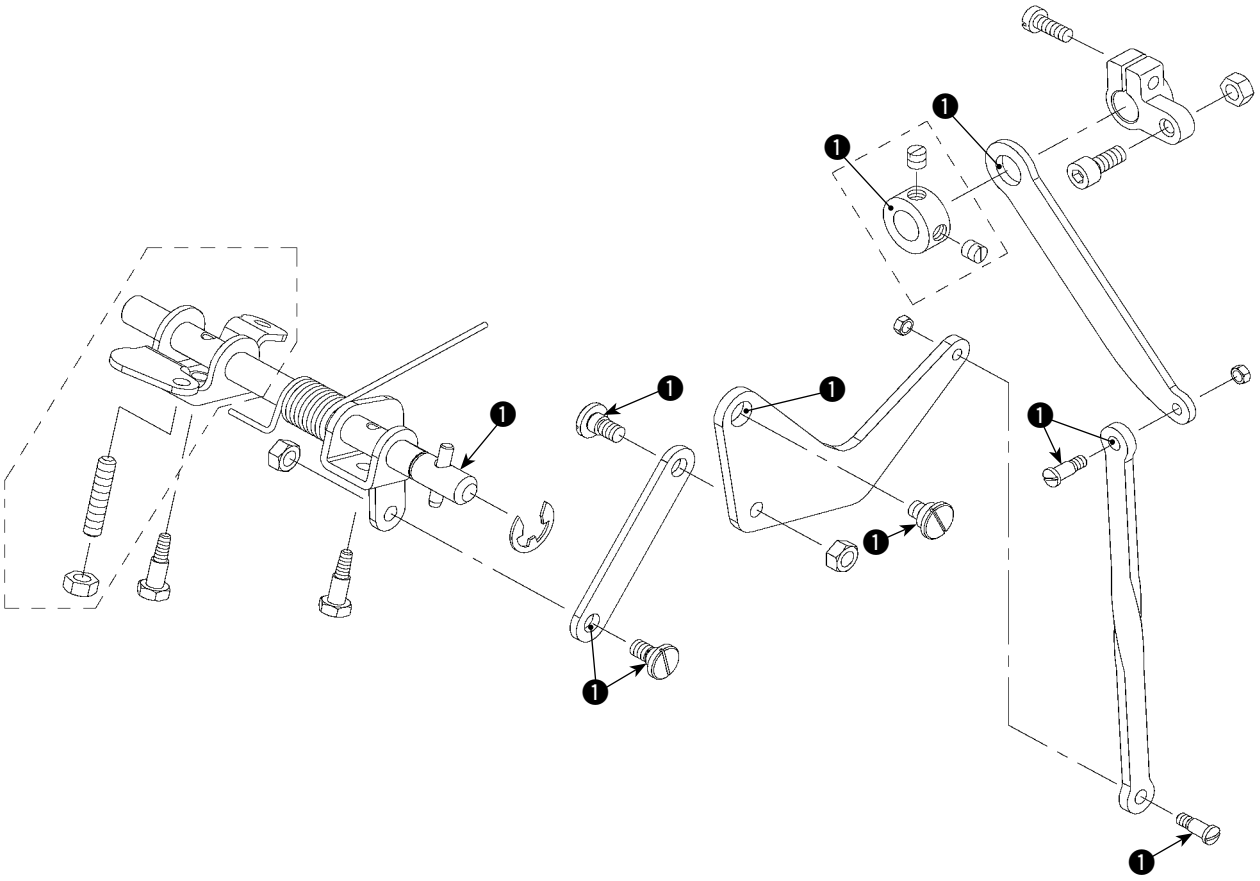

7. LOWER FEED COMPONENTS

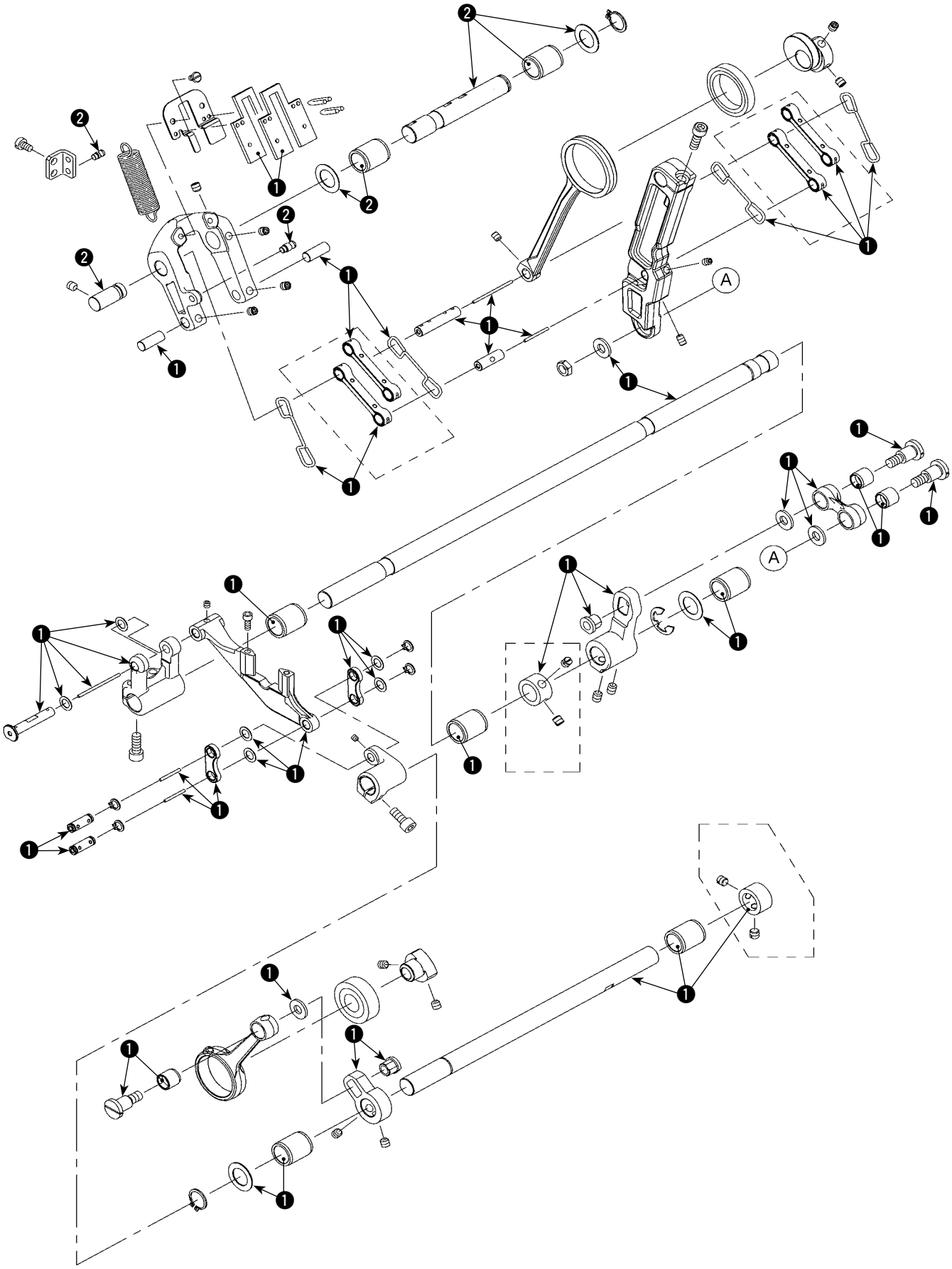

8. FEED ADJUST COMPONENTS

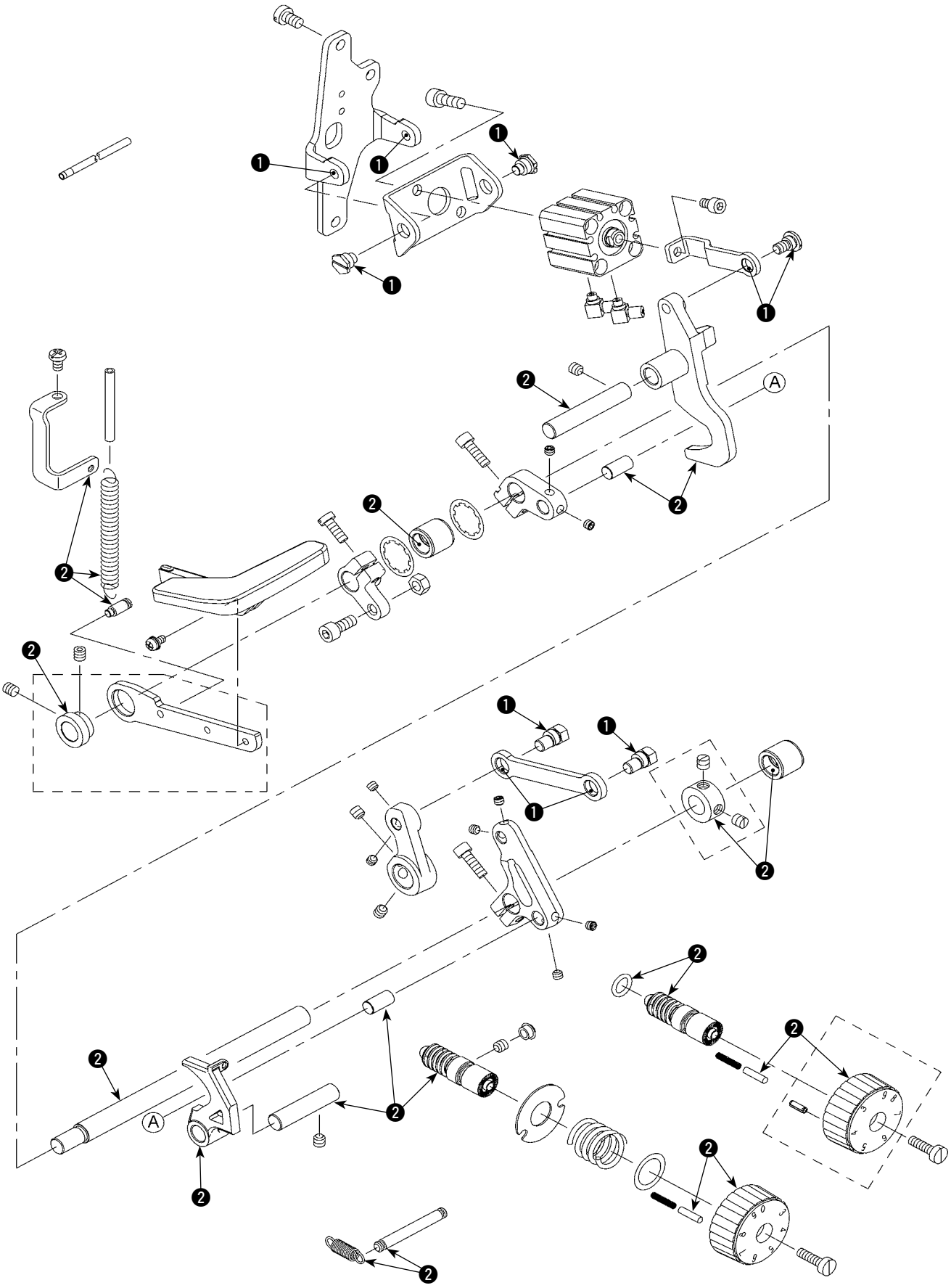

9. DL COMPONENTS (FOR LU-2810-7)

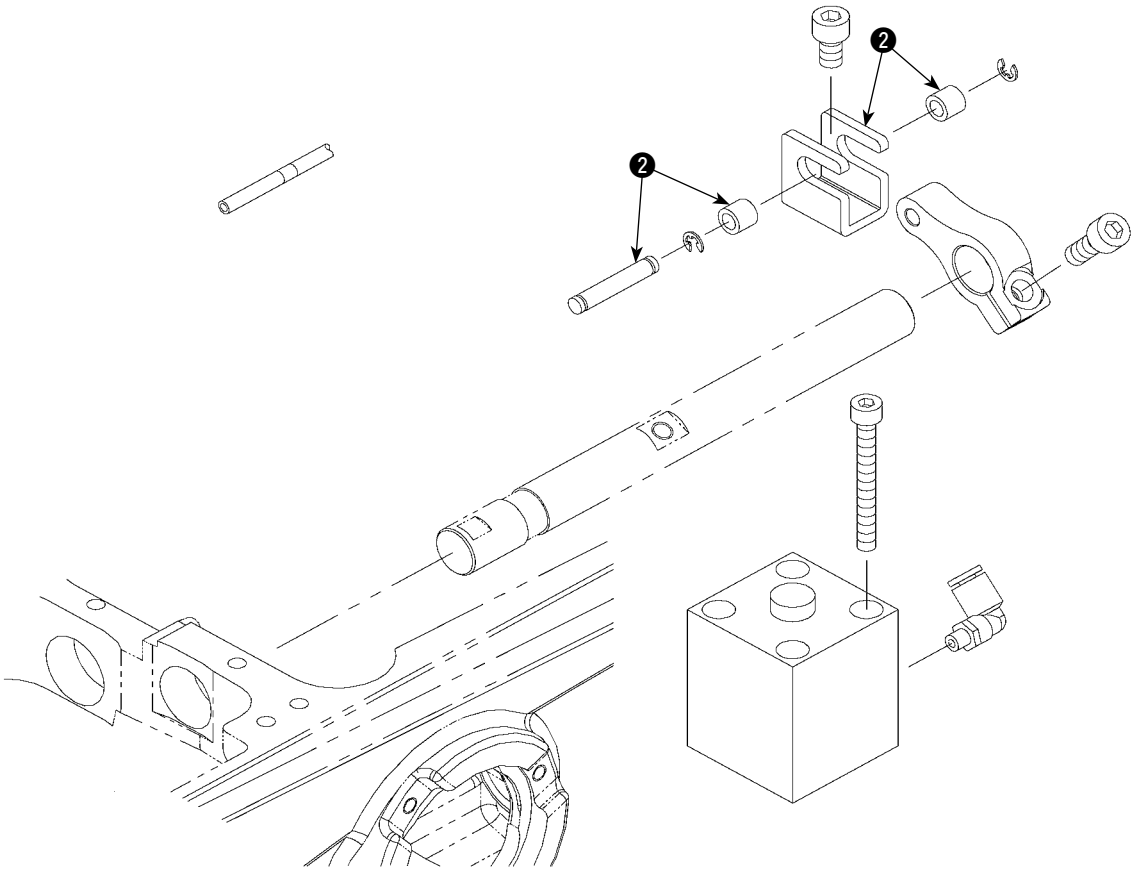


10. AUTO BT COMPONENTS (FOR LU-2810-7)

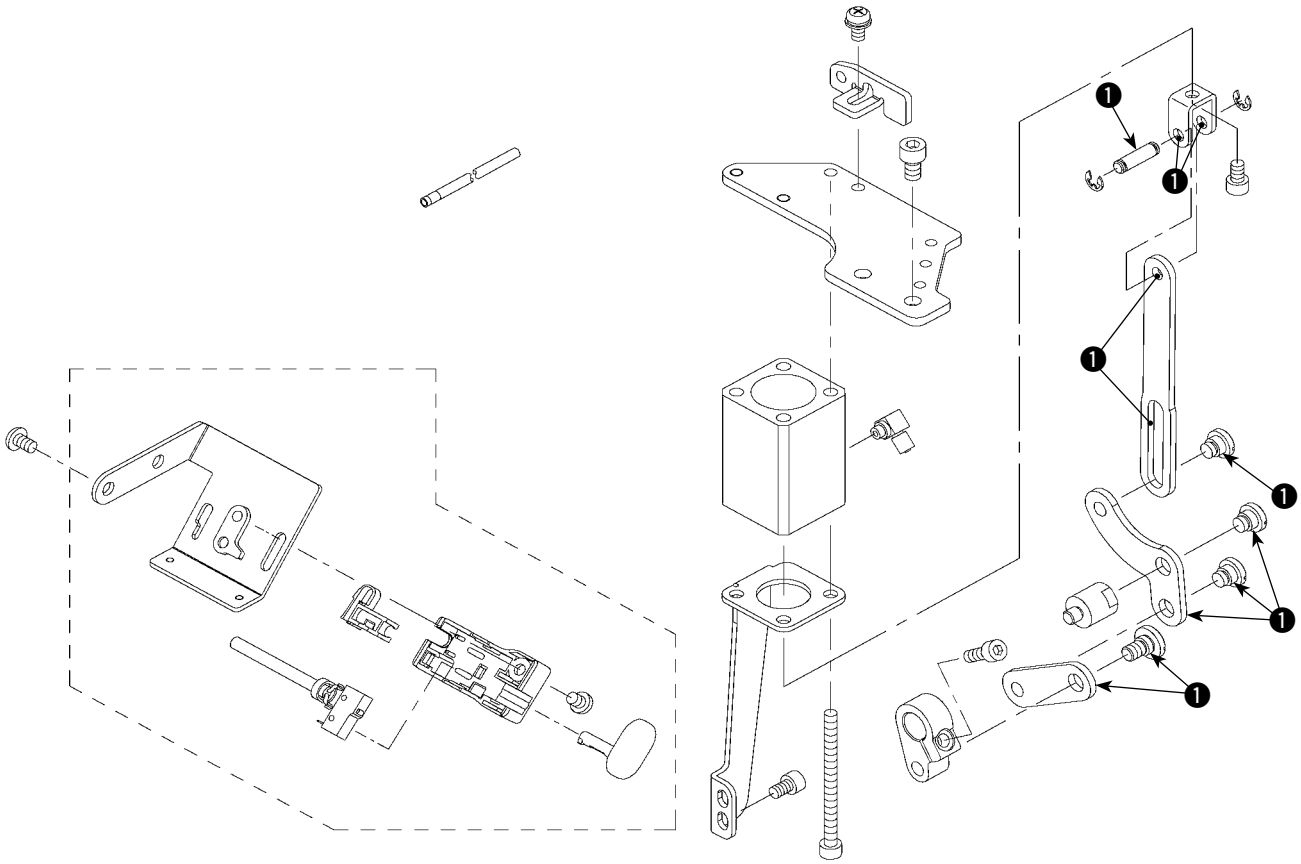

11. THREAD TRIMMING COMPONENTS (FOR LU-2810-7)

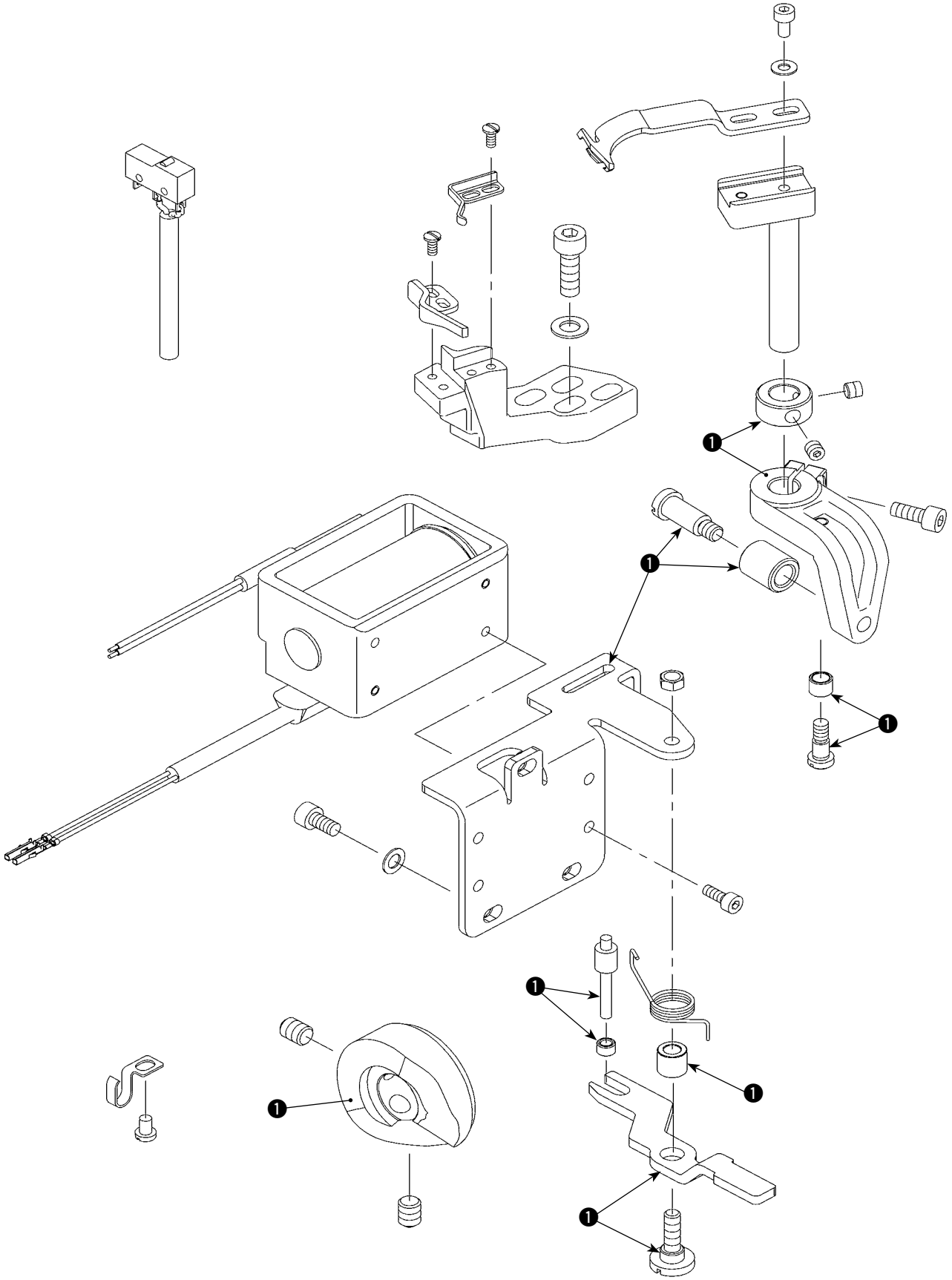

12. THREAD TENSION COMPONENTS

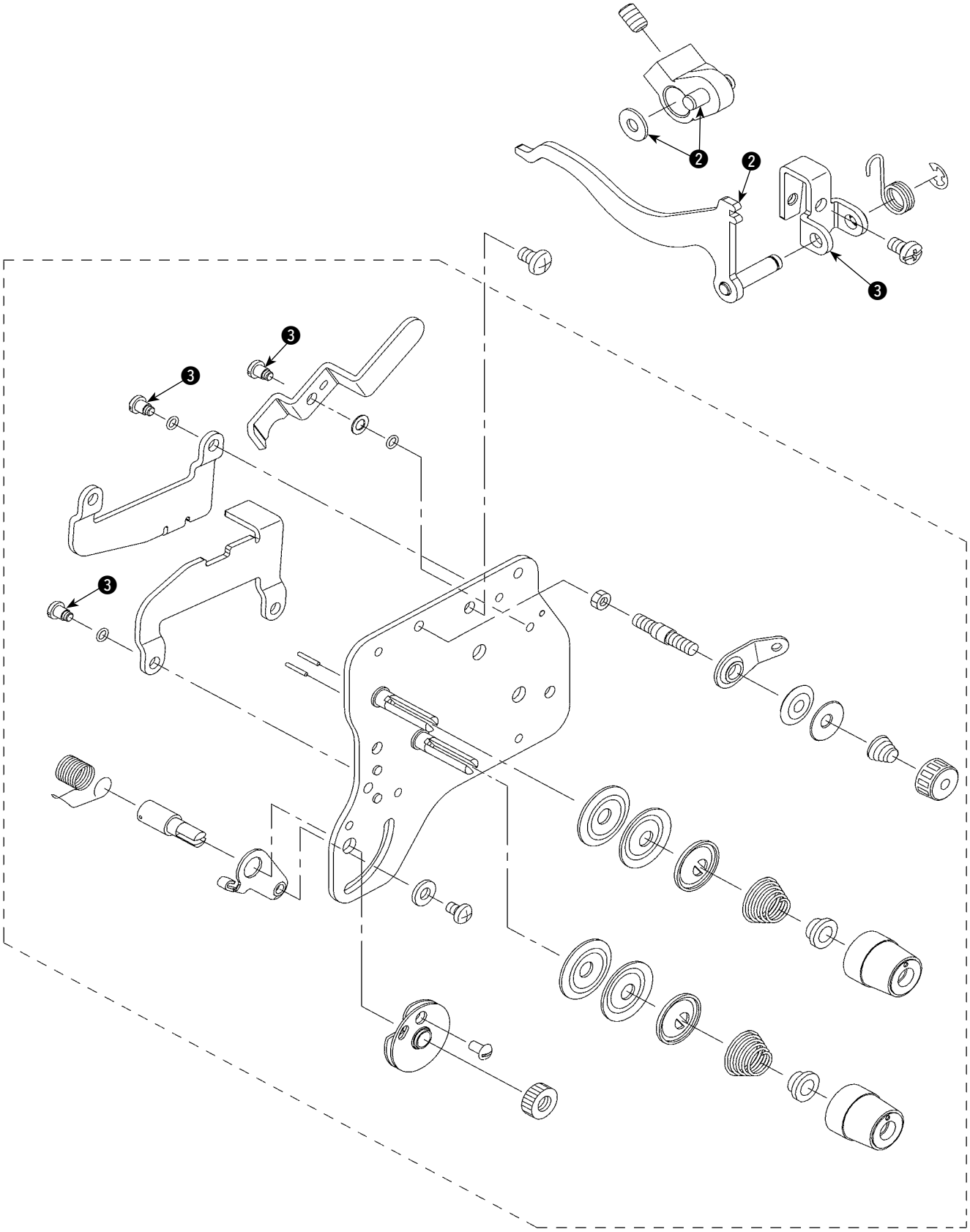

13. TENSION RELEASE COMPONENTS (FOR LU-2810-7)

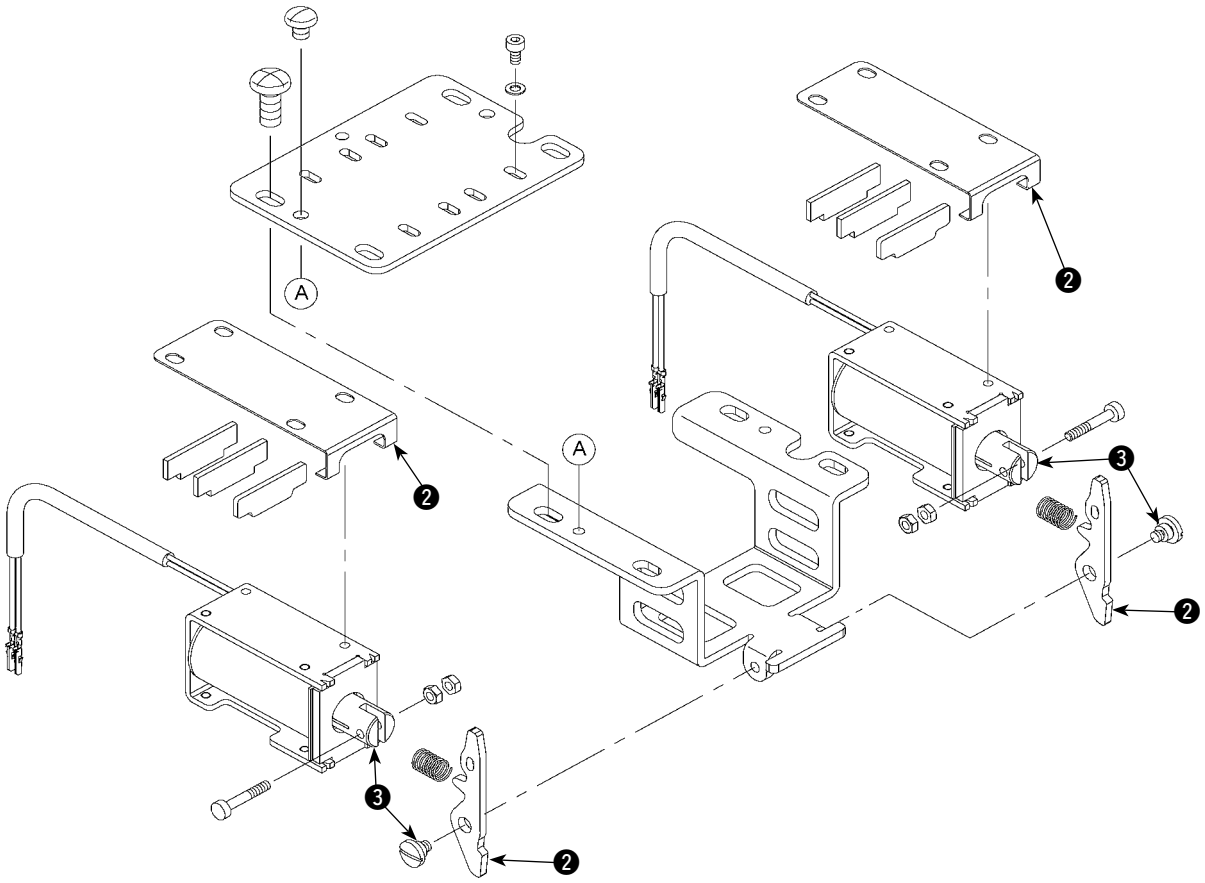

14. BOBBIN WINDER COMPONENTS

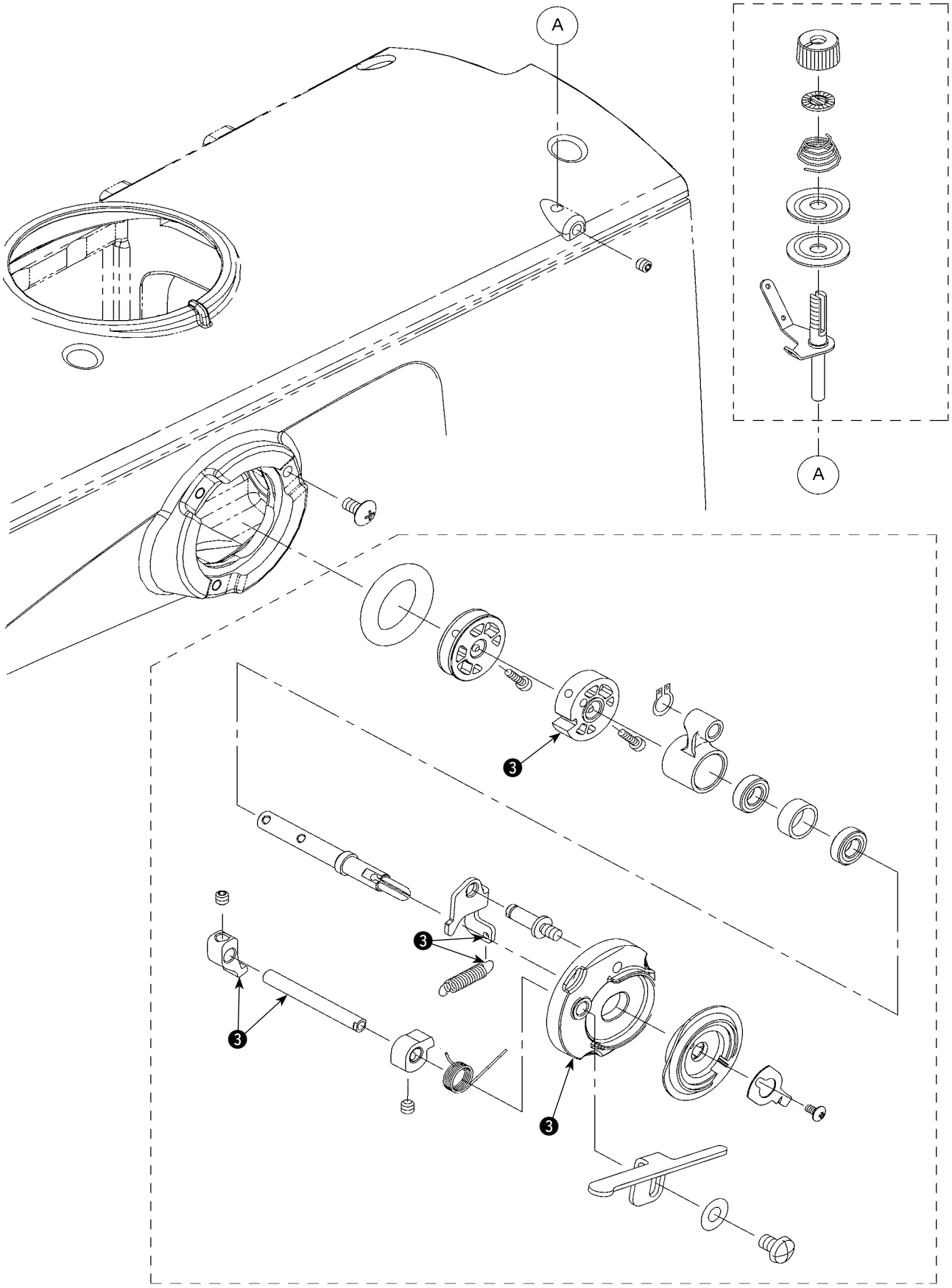

## 6. Engraved marker dots on the handwheel (for the machine with thread trimmer only)

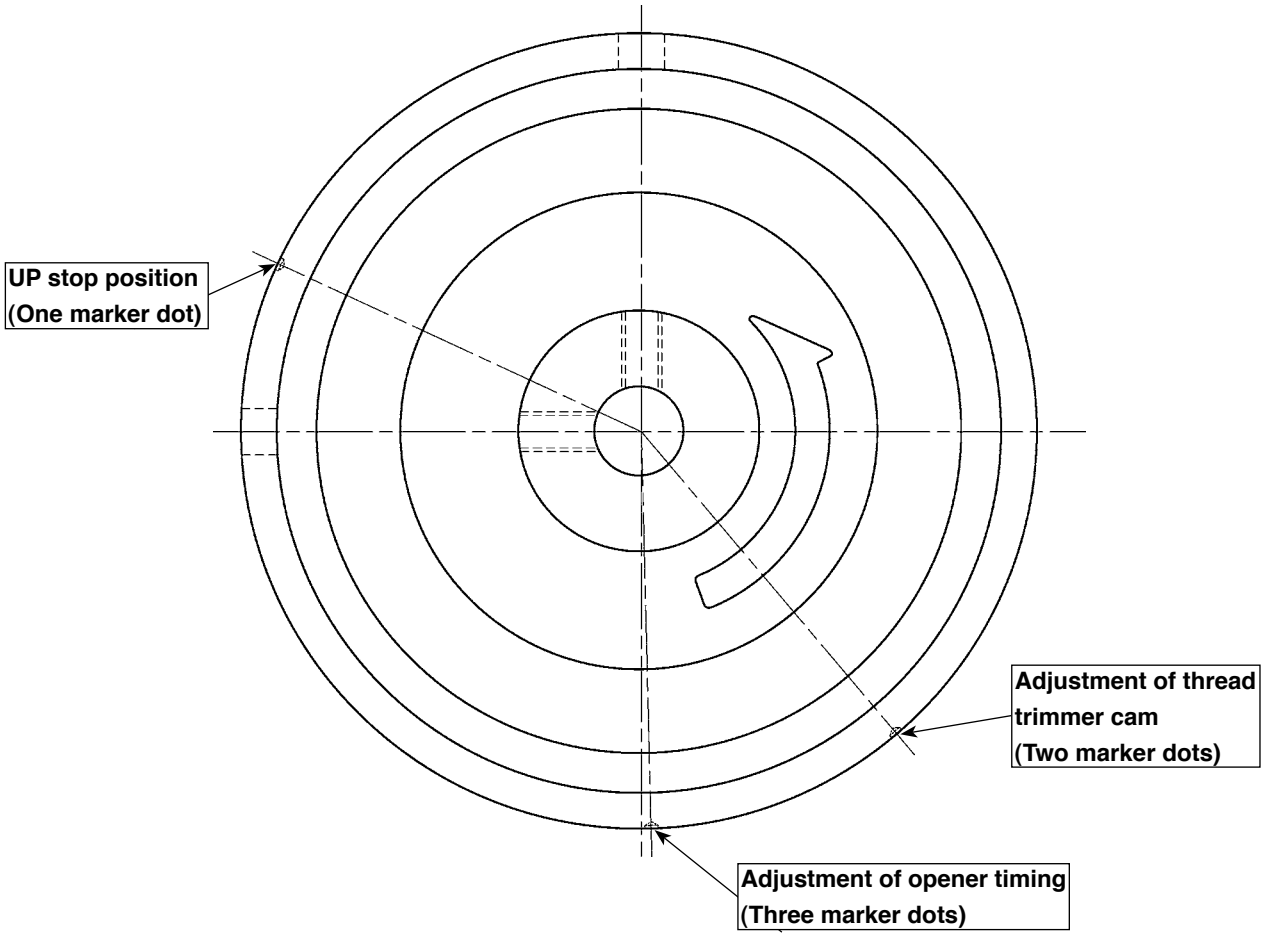

## 7. Lubrication route diagram

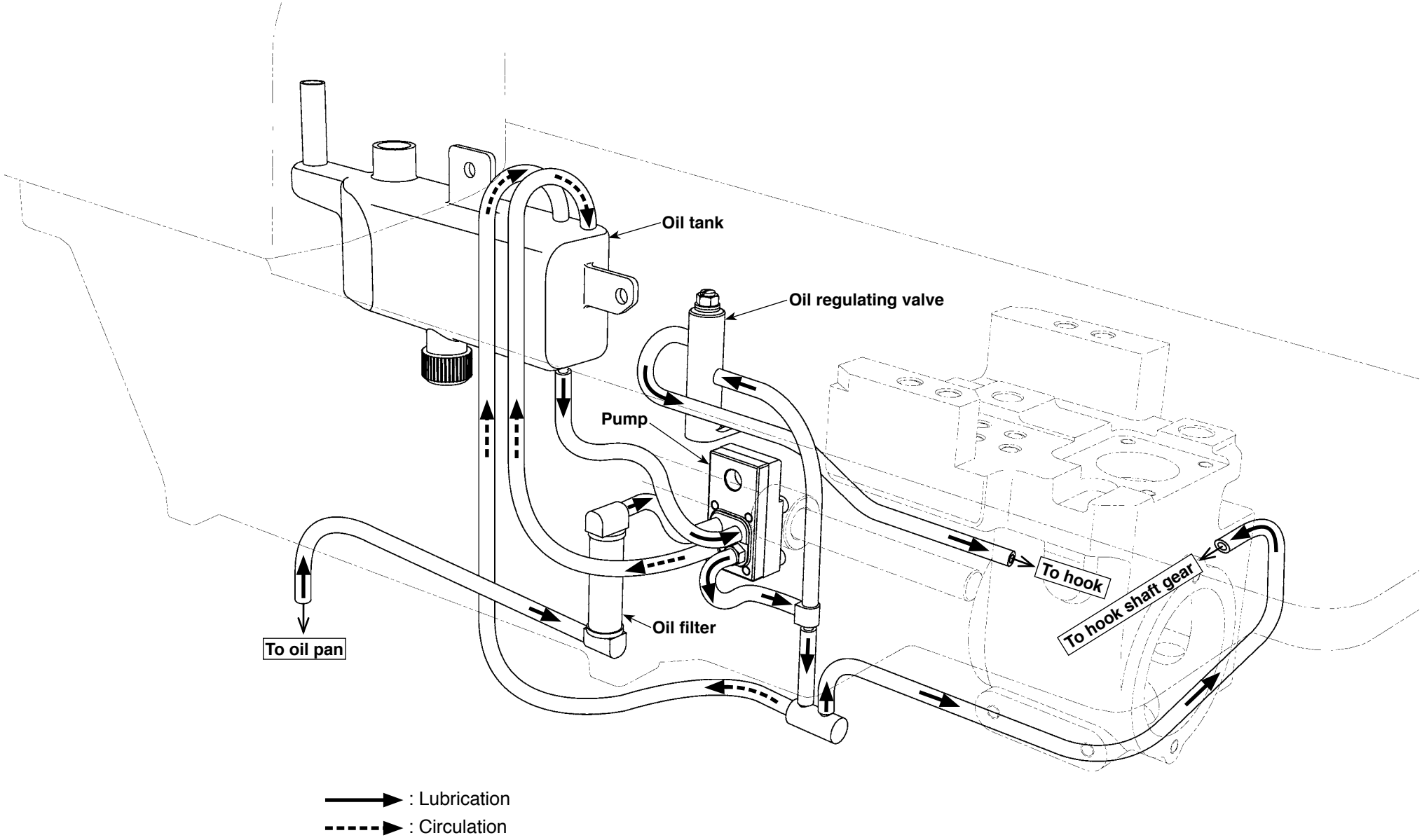

# 8. Machine head wiring (for the machine with thread trimmer only)

## (1) Connectors coming from machine head (Connect to control box)

o CN36 : 14P connector

| Pin No. | Part name | Remarks |
|---|---|---|
| 1 | Thread release solenoid (lower side) | |
| 2 | Thread release solenoid (upper side) | |
| 3 | — | — |
| 4 | Knee switch | |
| 5 | Reverse feed switch | |
| 6 | Thread trimmer solenoid (left side) | |
| 7 | Thread trimmer solenoid (right side) | |
| 8 | Thread release solenoid (lower side) | +27V |
| 9 | Thread release solenoid (upper side) | +27V |
| 10 | FG | FG |
| 11 | Knee switch | GND |
| 12 | Reverse feed switch | GND |
| 13 | Thread trimmer solenoid (left side) | +27V |
| 14 | Thread trimmer solenoid (right side) | +27V |

o CN37 : 2P connector

| Pin No. | Part name | Remarks |
|---|---|---|
| 1 | — | — |
| 2 | — | +27V |

o CN44 : 24P connector

| Pin No. | Part name | Remarks |
|---|---|---|
| 1 | 6-operation switch | +5V |
| 2 | 6-operation switch | +5V |
| 3 | — | +12V |
| 4 | 6-operation switch | Alternate vertical movement switch |
| 5 | 6-operation switch | Automatic reverse feed stitching cancellation switch |
| 6 | 6-operation switch | Needle up/down switch |
| 7 | 6-operation switch | 2-pitch changeover switch |
| 8 | 6-operation switch | Tension release (upper side) opening switch |
| 9 | 6-operation switch | — |
| 10 | 6-operation switch | Fall detection sensor |
| 11 | 6-operation switch | — |
| 12 | 6-operation switch | GND |
| 13 | 6-operation switch | GND |
| 14 | — | — |
| 15 | 6-operation switch | Alternate vertical movement state monitor output |
| 16 | 6-operation switch | Automatic reverse feed stitching cancellation state monitor output |
| 17 | 6-operation switch | Needle up/down correction operation output |
| 18 | 6-operation switch | 2-pitch state output |
| 19 | 6-operation switch | Tension increasing state monitor output |
| 20 | — | — |
| 21 | — | — |
| 22 | — | — |
| 23 | — | — |
| 24 | — | — |

o CN58 : 22P connector

| Pin No. | Part name | Remarks |
|---|---|---|
| 1 | — | +5V |
| 2 | — | GND |
| 3 | — | +5V |
| 4 | — | GND |
| 5 | — | +5V |
| 6 | — | GND |
| 7 | — | +12V |
| 8 | Alternate vertical movement limit switch | GND |
| 9 | — | +24V |
| 10 | — | GND |
| 11 | — | +24V |
| 12 | — | GND |
| 13 | — | |
| 14 | — | |
| 15 | Alternate vertical movement limit switch (lower side) | |
| 16 | Alternate vertical movement limit switch (upper side) | |
| 17 | — | |
| 18 | — | |
| 19 | — | |
| 20 | — | |
| 21 | — | |
| 22 | — | |

o CN59 : 26P connector

| Pin No. | Part name | Remarks |
|---|---|---|
| 1 | Solenoid valve | +24V |
| 2 | Solenoid valve | +24V |
| 3 | Solenoid valve | +24V |
| 4 | — | +24V |
| 5 | Solenoid valve | +24V |
| 6 | — | +24V |
| 7 | — | +24V |
| 8 | — | +24V |
| 9 | — | +24V |
| 10 | — | +24V |
| 11 | Solenoid valve | Presser lifting cylinder |
| 12 | Solenoid valve | Reverse feed cylinder |
| 13 | Solenoid valve | Alternate vertical movement cylinder |
| 14 | — | — |
| 15 | Solenoid valve | 2-pitch cylinder |
| 16 | — | — |
| 17 | — | — |
| 18 | — | — |
| 19 | — | — |
| 20 | — | — |
| 21 | — | — |
| 22 | — | — |
| 23 | — | — |
| 24 | — | — |
| 25 | — | — |
| 26 | — | — |

## (2) Connectors that are connected in the head cover

o CN100 : 14P connector

| Pin No. | Part name | Remarks |
|---|---|---|
| 1 | Thread release solenoid (lower side) | |
| 2 | Thread trimmer solenoid (right side) | |
| 3 | Thread release solenoid (upper side) | |
| 4 | Thread trimmer solenoid (left side) | |
| 5 | Reverse feed switch | GND |
| 6 | — | — |
| 7 | — | — |
| 8 | Thread release solenoid (lower side) | +27V |
| 9 | Thread trimmer solenoid (right side) | +27V |
| 10 | Thread release solenoid (upper side) | +27V |
| 11 | Thread trimmer solenoid (left side) | +27V |
| 12 | — | — |
| 13 | Reverse feed switch | |
| 14 | — | — |

o CN102 : 12P connector

| Pin No. | Part name | Remarks |
|---|---|---|
| 1 | Solenoid valve | Presser lifting cylinder |
| 2 | Solenoid valve | Reverse feed cylinder |
| 3 | Solenoid valve | Alternate vertical movement cylinder |
| 4 | — | — |
| 5 | Solenoid valve | 2-pitch cylinder |
| 6 | — | — |
| 7 | Solenoid valve | +24V |
| 8 | Solenoid valve | +24V |
| 9 | Solenoid valve | +24V |
| 10 | — | — |
| 11 | Solenoid valve | +24V |
| 12 | — | — |

# 9. Troubles and corrective measures

## (1) With regard to sewing

**WARNING :**
**Turn OFF the power before starting the work so as to prevent accidents caused by abrupt start of the sewing machine.**

| Trouble | Cause | Checking | Corrective measures |
|---|---|---|---|
| 1. Thread breakage | 1-1) Thread path, needle point, hook blade point or innerhook resting groove on the throat plate has sharp edges or burrs. | 1-A) Check the sharp edge or burr on the respective parts. | Remove the sharp edges or burrs on the blade point of hook using a fine emery paper.<br>Buff up the groove section on the throat plate.<br>Replace the needle with a new one. |
| 2. Thread is worn out. | 2-1) Needle thread tension is too high. | | Adjust the needle thread tension. |
| | 2-2) Needle comes in contact with the blade point of hook. | 2-A) Check the clearance. | Refer to “2.-(6) Needle-to-hook timing”. |
| | 2-3) Clearance of inner hook guide is too large. | 3-A) Check the clearance. | Decrease the clearance.<br>Refer to “2.-(5) Adjusting the inner hook guide”. |
| | 2-4) Amount of oil in the hook is insufficient. | 4-A) Check the amount of oil in the hook. | Adjust the amount of oil in the hook.<br>Refer to “2.-(15) Lubrication”. |
| | 2-5) Trimmed with the tooth of the feed dog. | 5-A) Check the feed dog. | Provide a groove behind the feed dog needle hole. |
| | | 5-B) Check the alternate vertical movement. | Reduce the amount of alternate vertical movement. |
| | | 5-C) Check the sewing speed. | Reduce the sewing speed. |

**WARNING :**
**Turn OFF the power before starting the work so as to prevent accidents caused by abrupt start of the sewing machine.**

| Trouble | Cause | Checking | Corrective measures |
|---|---|---|---|
| 3. Needle thread trails 2 to 3 cm from the wrong side of the fabric. | 3-1) Needle thread tension is too low. | | Adjust the needle thread tension. (This trouble occurs a lot when using synthetic threads. |
| | 3-2) Thread take-up spring works excessively or the stroke of the spring is too small. | | Decrease the tension of of the thread take-up spring and increase the stroke of the spring. |
| | 3-3) Feed timing is not proper. | | Refer to “2.-(8) Feed adjustment”. |
| | 3-4) Timing between the needle and the hook is excessively advanced or retarded. | 4-A) Check the specified dimen-sion. | Refer to “2.-(6) Needle-to-hook timing”. |
| | 3-5) Thread melts due to needle heat. | | Decrease the sewing speed.<br>Use silicon oil.<br>(Refer to * below.) |
| | 3-6) Amount of oil in the hook is excessive. | 6-A) Check the amount of oil in the hook. | Adjust the amount of oil in the hook.<br>Refer to “2.-(15) Lubrication”. |

* Use separately available parts below :

- 21144308 Needle thread lubricator
- B1114012000 Thread guide rod
- B91351230B0 Silicon oiler

**WARNING :**
**Turn OFF the power before starting the work so as to prevent accidents caused by abrupt start of the sewing machine.**

| Trouble | Cause | Checking | Corrective measures |
|---|---|---|---|
| 4. Stitch skipping | 4-1) Clearance between the needle and the blade point of hook is too large. | 1-A) Check the clearance. | Refer to “2.-(6) Needle-to-hook timing”. |
| | 4-2) Needle-to-hook timing is excessively advanced or retarded. | 2-A) Check the specified dimension. | Refer to “2.-(6) Needle-to-hook timing”. |
| | 4-3) Presser foot is rising. (Pressure of the presser foot is too low.) | 3-A) Check the pressure of the presser foot. | Tighten the presser spring regulator. |
| | 4-4) Height of the needle bar is improper. | 4-A) Check the lowest point of the needle bar. | Refer to “2.-(6) Needle-to-hook timing”. |
| | 4-5) Blade point of the hook is blunt. | 5-A) Check the blade point of the hook. | Correct the blade point of the hook or replace the hook with a new one. |
| | 4-6) Improper type of needle is used. | | Replace the needle with one which is thicker than the current needle by one count. |
| | 4-7) Hook needle guard is not unctioned. | 7-A) Check the functional amount of the needle guard. | Refer to “2.-(6) Needle-to-hook timing”. |
| | 4-8) Thread take-up spring excessively works or the stroke of the spring is too small. | | Decrease the tension of the thread take-up spring and increase the stroke of the spring. |
| | 4-9) Feed timing is not proper. | | Refer to “2.-(8) Feed adjustment”. |
| | 4-10) Needle thread tension is too high. | | Adjust the needle thread tension. |

**WARNING :**
**Turn OFF the power before starting the work so as to prevent accidents caused by abrupt start of the sewing machine.**

| Trouble | Cause | Checking | Corrective measures |
|---|---|---|---|
| 5. Loose stitches (Balloon stitches or isolated idling loop) | 5-1) Clearance between the inner hook guide and the protruding section of inner hook is too large. | 1-A) Check the clearance. | Refer to “2.-(5) Adjusting the inner hook guide”. |
| | 5-2) Thread paths have been poorly finished. | 2-A) Check the finish of the respective thread paths. | Finish using a fine emery paper or buff. |
| | 5-3) Bobbin fails to move smoothly. | 3-A) Check the change of bobbin thread tension. | Replace the bobbin or the hook with new ones. |
| | 5-4) Thread is not well tightened in the reverse feed. | 4-A) Walking foot is not of top-divided type. | Use the optional walking foot and presser foot. |
| | 5-5) Height of the feed dog is too high. | 5-A) Compare the height with the standard value. | Refer to “2.-(3) Height of the feed dog”.<br>Lower the height by 0.2 mm than the standard value. |
| | 5-6) Feed timing is excessively advanced. | | Retard the feed timing. |
| | 5-7) Hard-to-slip thread is used. | | Use silicon oil. (Refer to * below.) |

* Use separately available parts below :
- 21144308 Needle thread lubricator
- B1114012000 Thread guide rod
- B91351230B0 Silicon oiler

| | | | |
|---|---|---|---|
| 6. Loose stitches (Needle thread rises.) | 6-1) Needle thread has not been fully pulled up. | | Increase the needle thread ension.<br>Use the optional walking foot. (Top-divided type) |

**WARNING :**
**Turn OFF the power before starting the work so as to prevent accidents caused by abrupt start of the sewing machine.**

| Trouble | Cause | Checking | Corrective measures |
|---|---|---|---|
| 7. Irregular stitches | 7-1) Stroke of the thread take-up spring is improper. | 1-A) Check the stroke of the thread take-up spring. | Adjust the thread take-up spring to move to approximately 1 mm from the initial position when hook draws thread maximumly. |
| | 7-2) Thread paths have been poorly finished. | 2-A) Check the finish of the respective thread paths. | Finish with a fine emery paper or buff. |
| | 7-3) Bobbin fails to move smoothly. | 3-A) Check the change of bobbin thread tension. | Replace the bobbin or the hook with new ones. |
| | 7-4) Bobbin thread tension is too low. | | Increase the tension of the bobbin thread. |
| | 7-5) Bobbin has been wound too tight or too weak. | 5-A) Check the state of bobbin winding. | Decrease or increase the tension applied to the bobbin winder. |
| | 7-6) Direction of setting bobbin is reverse. | 6-A) Check the setting. | Properly set the bobbin. |
| 8. Loose stitches at the time of corner stitching | 8-1) Needle thread on the stopping side is drawn out more than is necessary. | 1-A) Check the stroke of the thread take-up spring. | In crease the stroke of the thread take-up spring. |
| | | 1-B) Check the hook timing. | Retard the hook timing. |
| | | | Use the optional walking foot. (Top divided type) |

Adjustment of the thread take-up spring

o Decrease the tension of the thread take-up spring and decrease the stroke of the spring to improve irregular stitches.

## (2) With regard to thread trimming

**WARNING :**
**Turn OFF the power before starting the work so as to prevent accidents caused by abrupt start of the sewing machine.**

| Trouble | Cause | Checking | Corrective measures |
|---|---|---|---|
| 1. One or several stitches skip at the start of sewing. | 1-1) Thread remaining at the needle top after thread trimming is short. | 1-A) Check the routing of needle thread. | Thread the needle thread correctly. Adjust so that abnormal needle thread tension is not applied. |
| | | 1-B) Thread tension given by the tension controller No.1 is too high. | Decrease the tension given by the tension controller No.1. |
| | | 1-C) Check the rising amount of the thread tension disk No.2 at the time of thread trimming. | Adjust so that the disk is raised by means of the thread release solenoid. |
| | | 1-D) Thread trimmer timing is excessively advanced. | Refer to “2.-(16)-4) Thread trimmer cam timing”. |
| | | 1-E) There are scratches on the moving knife and the hook. | Polish with buff or replace the part with a new one. |
| | | 1-F) Presser foot drops from cloth at the time of thread trimming. | Perform thread trimming on cloth. |
| | 1-2) Bobbin thread is not clamped. | 2-A) Position of the clamp spring. | Refer to “2.-(16)-1) Position of the counter knife and the clamp spring”. |
| | | 2-B) Pressure of the clamp spring is too low. | Refer to “2.-(16)-1) Position of the counter knife and the clamp spring”. |
| | | 2-C) There are scratches on the clamp spring. | Replace the clamp spring with a new one. |
| | | 2-D) Needle thread removes bobbin thread. | Increase or decrease the tension of the tension controller No.1. |
| | 1-3) Needle is too thick. | | Replace the needle with a thinner one. |
| | 1-4) Needle hole in the feed dog is too large. | | Replace the feed dog with small needle hole. |
| | 1-5) Pressure of the presser foot is too low. | | Increase the pressure of the presser foot. |
| | 1-6) Stitches are too small. | | Do not pass thread through the thread presser section of the thread guide on the needle bar. |

**WARNING :**
**Turn OFF the power before starting the work so as to prevent accidents caused by abrupt start of the sewing machine.**

| Trouble | Cause | Checking | Corrective measures |
|---|---|---|---|
| 2. Thread slips off the needle eyelet. | 2-1) Needle thread slips off the needle eyelet immediately after thread trimming. | 1-A) Check whether the needle thread remaining at the needle top after thread trimming is short. | Refer to the cause of previous section “Needle thread remaining at the needle top after thread trimming is short”. |
| | 2-2) Needle thread slips off the needle eyelet at the start of sewing. | 2-A) Check whether the needle thread remaining at the needle top at the start of sewing is short. | |
| | | 2-B) Hard-to-slip thread is used. | Decrease the number of times of threading needle thread. |
| 3. Defective thread trimming | 3-1) Thread cannot be trimmed. | 1-A) The blades of moving knife and counter knife have been improperly adjusted. | Refer to “2.-(16)-6) Adjusting the knife pressure” and “2.-(16)-1), 2) and 3) Position of the moving knife and Position of the counter knife”. |
| | | 1-B) The blades of moving knife and counter knife have worn out or broken. | Replace the moving knife and counter knife with new ones. |
| | | 1-C) Pressure of the counter knife is insufficient. | Refer to “2.-(16)-6) Adjusting the knife pressure”. |
| | | 1-D) Presser foot drops from cloth at the time of thread trimming. | Perform thread trimming on cloth. |
| | 3-2) Thread remains uncut after thread trimming. | 2-A) The blades of moving knife and counter knife have been improperly adjusted. | Refer to “2.-(16)-6) Adjusting the knife pressure” and “2.-(16)-1), 2) and 3) Position of the moving knife and Position of the counter knife”. |
| | | 2-B) The blades of moving knife and counter knife have worn out or broken. | Replace the moving knife and counter knife with new ones. |
| | | 2-C) Thread trimmer timing is excessively retarded. | Refer to “2.-(16)-4) Thread trimmer cam timing”. |
| | | 2-D) Pressure of the counter knife is insufficient. | Refer to “2.-(16)-6) Adjusting the knife pressure”. |
| | | 2-E) Presser foot drops from cloth at the time of thread trimming. | Perform thread trimming on cloth. |

To the next page

**WARNING :**
**Turn OFF the power before starting the work so as to prevent accidents caused by abrupt start of the sewing machine.**

From the previous page

| Trouble | Cause | Checking | Corrective measures |
|---|---|---|---|
| | 3-3) Moving knife stops during operation. | 3-A) Thread is too thick. | Use thread within the specified value. |
| | | 3-B) Thread trimmer timing is excessively retarded. | Refer to “2.-(16)-4) Thread trimmer cam timing”. |
| | | 3-C) Needle thread tension is too high. | Decrease the tension of the thread tension No. 1. |
| | | 3-D) Tension of the bobbin thread is too high. | Adjust the tension of bobbin thread. |
| | | 3-E) Knife pressure of the counter knife is too high. | Refer to “2.-(16)-6) Adjusting the knife pressure”. |
| | | 3-F) Initial position of the moving knife is excessively advanced. | Refer to “2.-(16)-4) Thread trimmer cam timing”. |
| | | 3-G) Thread is not cut sharply. | Refer to causes “Thread cannot be trimmed” and “Thread remains uncut after trimming”. |
| | 3-4) Needle thread is not caught. | 4-A) Stitch skipping at the last stitch. | Refer to “2.-(6) Needle-to-hook timing”. |
| | | 4-B) Check the thread trimmer cam timing. | Refer to “2.-(16)-4) Thread trimmer cam timing”. |
| | | 4-C) Top end of the moving knife is broken or has burrs. | Replace the moving knife with a new one. |
| | 3-5) Bobbin thread is not caught. | 5-A) Stroke of the moving knife is small. | Refer to “2.-(16)-3) Vertical position of the moving knife”. |
| | | 5-B) Check the routing of bobbin thread. | Correctly thread bobbin thread. |
| | | 5-C) Top end of the moving knife has broken or been scratched. | Replace the moving knife with a new one. |
| | | 5-D) Check the height of moving knife. | Adjust the height of moving knife. |
| | | 5-E) Thread trimming is performed at the position where there is no sewing product. | Perform thread trimming while pulling sewing product in the feed direction. |

To the next page

**WARNING :**
**Turn OFF the power before starting the work so as to prevent accidents caused by abrupt start of the sewing machine.**

| Trouble | Cause | Checking | Corrective measures |
|---|---|---|---|
| From the previous page | | | |
| | 3-6) Both needle and bobbin thread cannot be trimmed. | 6-A) The blades of moving knife and counter knife have been improperly adjusted. | Refer to “2.-(16)-6) Adjusting the knife pressure”. |
| | | 6-B) Counter knife pressure is excessively low. | Refer to “2.-(16)-6) Adjusting the knife pressure”. |
| | | 6-C) Moving knife fails to work. | Refer to “2.-(16)-5) Position of the thread trimmer cam”, and “2.-(16)-4) Thread trimmer cam timing”. |
| | | | Replace the thread trimmer solenoid with a new one. |
| | | 6-D) Presser foot drops from cloth at the time of thread trimming. | Perform thread trimming on cloth. |

## 10. Drawing of table

### (1) For without thread trimming

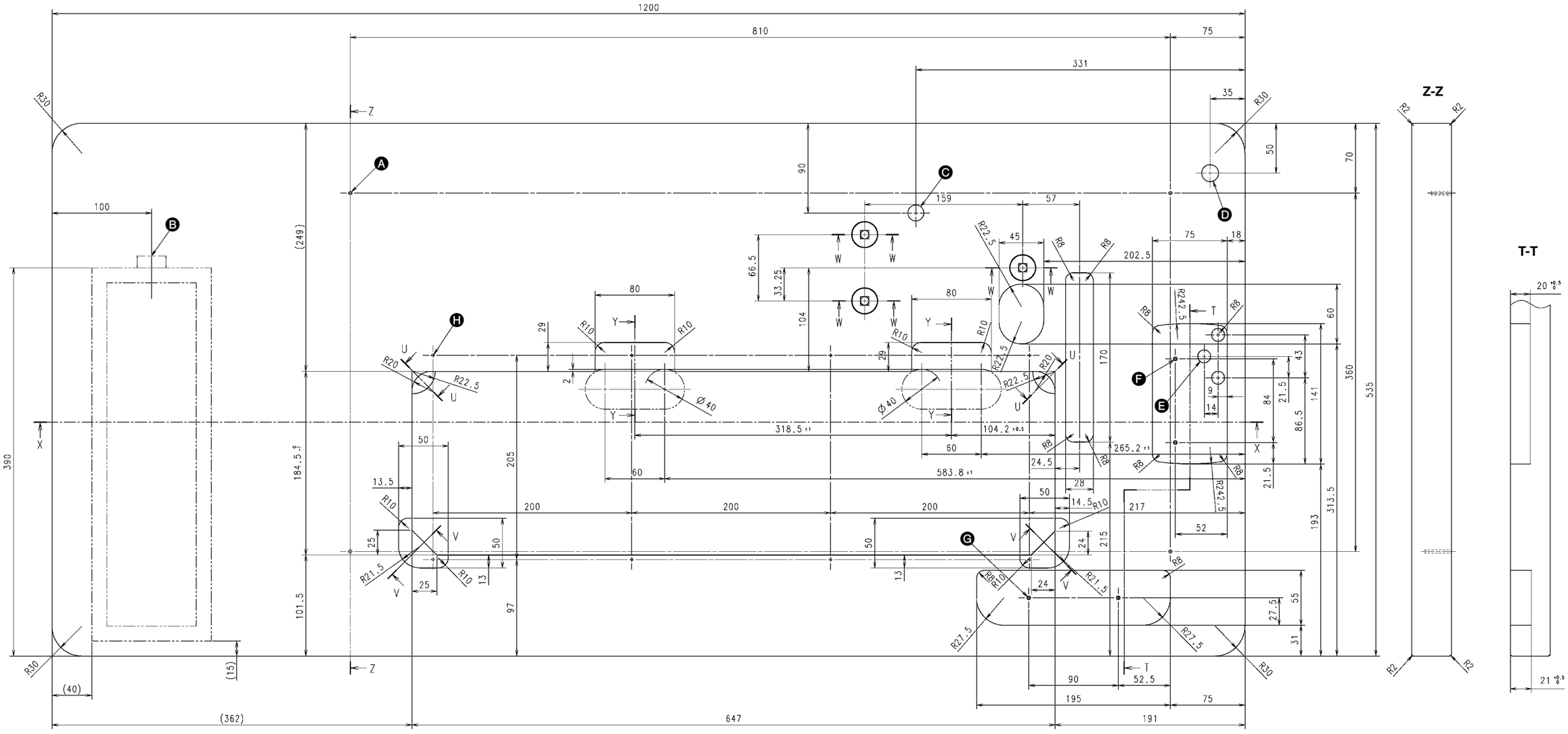


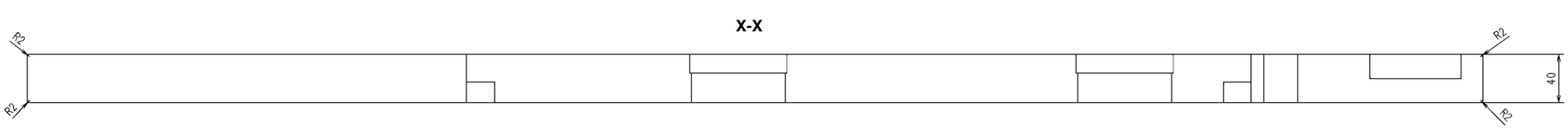


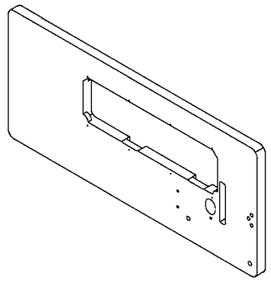

W-W (3 locations)

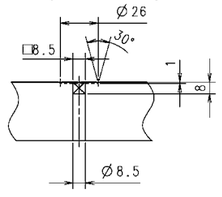

U-U (2 locations)

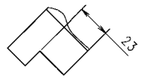

V-V (2 locations)

Y-Y (2 locations)

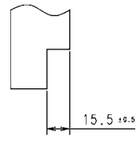

Ⓐ 4 × ø3.4 on the bottom surface, depth 20 (Drill a hole at the time of set-up.)
Ⓑ Installing position of drawer stopper (on the bottom surface)
Ⓒ ø16 depth 25
Ⓓ ø17 drilled hole
Ⓔ 3 × ø13 drilled hole
Ⓕ 2 × ø3.5 depth 10
Ⓖ 2 × ø3.5 depth 10
Ⓗ 8 × ø2.7 on the bottom surface, depth 6 (Drill a hole at the time of set-up.)

Part No. : 40112290

## (2) For SC-922

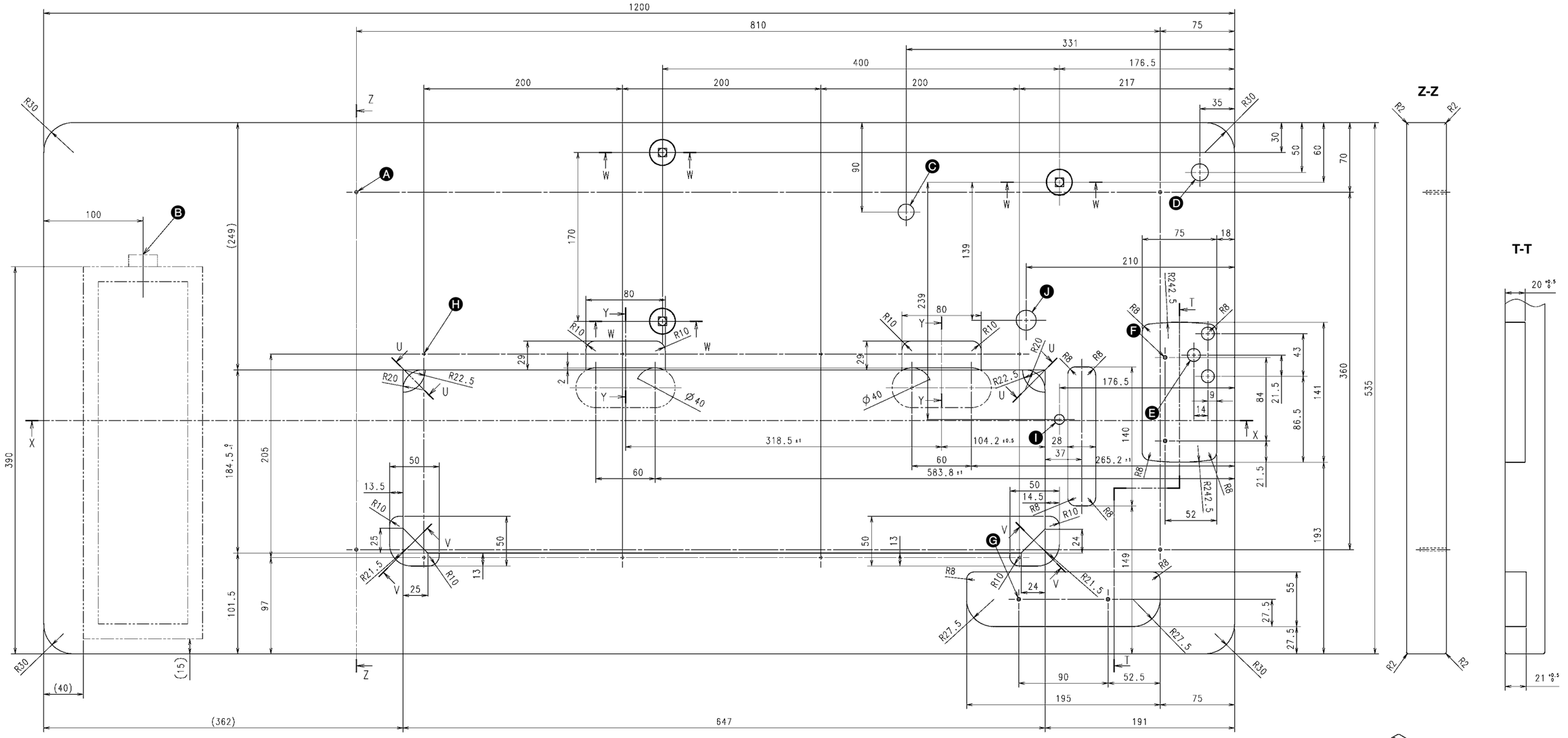


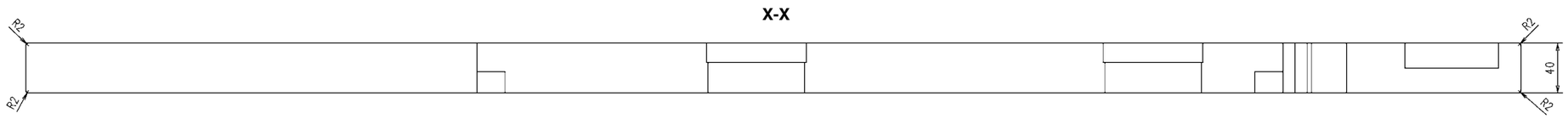


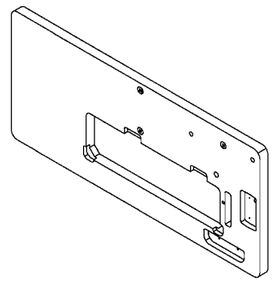

- Ⓐ 4 × ø3.4 on the bottom surface, depth 20 (Drill a hole at the time of set-up.)
- Ⓑ Installing position of drawer stopper (on the bottom surface)
- Ⓒ ø16 depth 25
- Ⓓ ø17 drilled hole
- Ⓔ 3 × ø13 drilled hole
- Ⓕ 2 × ø3.5 depth 10
- Ⓖ 2 × ø3.5 depth 10
- Ⓗ 8 × ø2.7 on the bottom surface, depth 6 (Drill a hole at the time of set-up.)
- Ⓘ ø10 drilled hole
- Ⓙ ø20 drilled hole

**W-W (3 locations)**

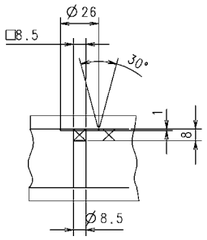

**U-U (2 locations)**

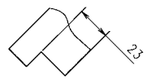

**V-V (2 locations)**

**Y-Y (2 locations)**

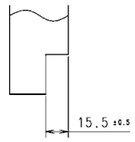

Part No. : 40123233

JUKI CORPORATION HEAD OFFICE

An environmental management system to promote and conduct the following:
(1) Eco–friendly development of products and technologies
(2) Green procurement and green purchasing
(3) Energy conservation (reduction in carbon–dioxide emissions)
(4) Resource saving (reduction of papers purchased, etc.)
(5) Reduction and recycling of waste
in the activities of research, development, design, sales, distribution, and maintenance services of industrial sewing machines and industrial robots, etc., including sales and maintenance services of data entry systems.

This manual uses environment-friendly soyink.

JUKI CORPORATION
**SEWING MACHINERY BUSINESS UNIT**
2-11-1, TSURUMAKI, TAMA-SHI,
TOKYO, 206-8551, JAPAN
PHONE : (81)42-357-2371
FAX : (81)42-357-2380
http://www.juki.com

Please do not hesitate to contact our distributors or agents in your area for further information when necessary.

*** The description covered in this engineer's manual is subject to change for improvement of the commodity without notice.**

Copyright © 2012 JUKI CORPORATION
All rights reserved throughout the world.

12 · 12 Printed in Japan (E)