Model **4300BC**

Revision 1.6 Updated Aug 5, 2016

Technical Manual & Parts Lists

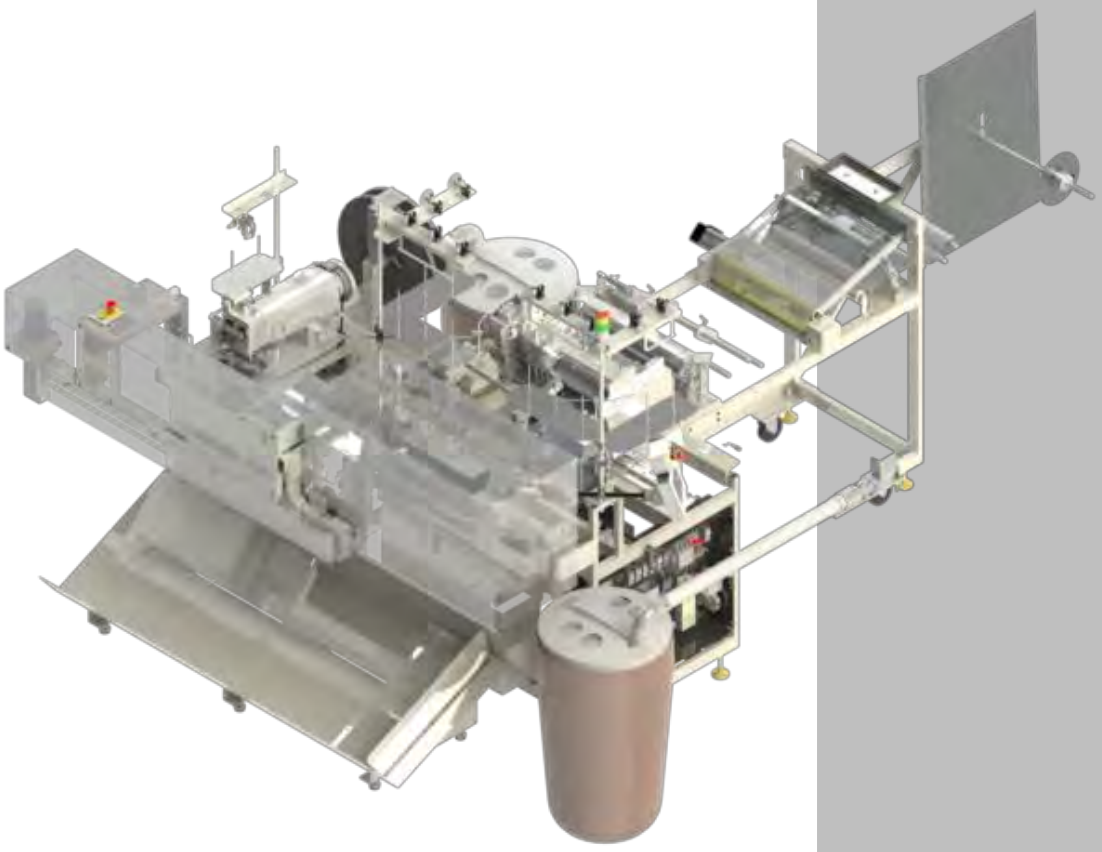

Atlanta Attachment Company

362 Industrial Park Drive

Lawrenceville, GA 30046

770-963-7369 • www.atlatt.com

ATLANTA ATTACHMENT COMPANY, INC.

Confidential and Proprietary Information

The materials contained herein are confidential and proprietary information of Atlanta Attachment Company. In addition to any confidentiality and non-disclosure obligations that currently exist between you and Atlanta Attachment Company, your use of these materials serves as an acknowledgment of the confidential and proprietary nature of these materials and your duty not to make any unauthorized use or disclosure of these materials.

All materials contained herein are additionally protected by United States Copyright law and may not be used, disclosed, reproduced, distributed, published or sold without the express written consent of Atlanta Attachment Company, which consent may be withheld in Atlanta Attachment Company's sole discretion. You may not alter or remove any copyright, trademark or other notice from copies of these materials.

This equipment may be protected by one or more US and foreign patents.

For a complete list visit
atlatt.com/patents.php

IMPORTANT

It is important to read and understand the information contained within this manual before attempting to operate the machine. Atlanta Attachment Co., Inc. shall not be held liable for damage resulting from misuse of the information presented within, and reserves the right to change the information contained within, without prior notification.

Contents

Important Safety Instruction 1
Safety Equipment on the Machines 3
Protective Eyewear 4
Important Notices 5
Maintenance 7
Repair 8
A Word to the End User 9
Safety Precautions 10
1.- INSTALLATION MANUAL 11
1.1.- Parts and Components 11
1.2.- Technical Data 12
1.3.- Installation & Set Up 13
1.4.- Lockout/Tagout Program 14
2.- OPERATING MANUAL 15
2.1.- Individual Components 15
2.1.1.- Control Panel 15
2.1.2.- Light Tower 33001130 15
2.1.3.- Foot Pedal EE24F163 16
2.1.4.- Left Head Adjustment Crank 16
2.1.5.- Removing the Handle Loader 16
2.1.6.- Efka Control Box 17
2.1.7.- Stepping Motors Control Boxes 17
2.2.- Touch-Screen 18
2.2.1.- General Operation 18
2.2.2- Available Menus 19
2.3.- Changing the Needle 24
2.4.- Threading 24
2.5.- Loading Materials 26
2.5.1.- Initial Border Loading Procedure 26
2.5.2.- Handle Indexer Loading Procedure. 28
2.5.3.- Border Splicing Method 29
2.6.- Creating a Style 30
2.7.- Set Up and Operating 31
2.7.1.- Power Up Procedure 31
2.7.2.- Border loading Procedure 31
2.7.3.- Setting Up The Machine To Make Borders 32

2.7.4.- Compensation and Set-up Instructions 33
2.7.2.- Quality Check sheet & Procedure 34
2.8.- Maintenance 36
2.8.1.- Daily (8 -10 hrs. of operation) 36
3.-TECHNICAL MANUAL 37
3.1.- Mechanical 37
3.1.1- Sewing Head Adjustments 37
3.1.2- Adjusting Cutting Blades 41
3.2.- Pneumatic 44
3.2.1.- Main Air pressure regulator AA198-5110 44
3.2.2.- Air pressure module. 4080-200 44
3.3.- Electrical 45
3.3.1.- Main Power witch 45
3.3.2.- Sensors 46
3.4.- Stepping Motor Control Box 50
3.4.1.- Left Belt Feed AP-28-600CC 50
3.4.2.- Right Belt Feed AP-28-600CC 50
3.4.3.- Handle Feed AP-28-800W 50
3.4.4.- Handle Feed AP-28-800W 50
3.4.5.- Mini Switch (SW1) 51
3.5.- Efka Motor 52
3.5.1.- Programming the Code Number 52
3.5.2.- To Perform Master Reset of Parameters: 56
3.5.3.- Parameter List 56
3.6.- Serial Bus 60
3.6.1.- Technical Menus 60
3.6.2.- Calibrating the Touch Screen 62
3.6.3.- Installation of a new Touch Screen. 63
3.6.4.- Standard Modules 64
3.7.- Maintenance 66
3.7.1.- Daily (8 -10 hrs. of operation) 66
3.7.2.- Weekly (40 hrs. of operation) 66
3.8.- Troubleshooting 67
3.8.1.- Efka Controller Error 67
3.8.2.- Flow Chart EFKA Error E1 68
Sewing trouble shooting 69
Assembly Drawings & Parts Lists 72

4300B VERTICAL HANDLE INSERTER, 18” 74
4300150 Dual Motor Heavy Duty 75
4300190 Heavy Duty Main Assembly, 18” 78
1366140 Guillotine Assembly, 18” 79
1366114 Guillotine Assembly,18” 82
1366150 Worm Gear Drive Adaptor 83
4300103 Touch Screen Assembly 84
1961-800F Waste Assembly 85
4300020 Left Sewing Head Assembly 86
4300030 Right Sewing Head Assembly 87
4300035 Control Assembly 90
4300065 Stepper Box Assembly 91
4300221 Insert Rail Assembly, 18” 92
4300223 Cable Rack Assembly 93
4300270 TOP BELT FEED ASSY. RIGHT 96
4300280 TOP BELT FEED ASSY., LEFT 98
4300490 HANDLE CUT INSERT 18” 100
4300415 FEED AND CUT ASSY 102
4300420 HANDLE INSERT DRIVE ASSY 103
4300240 Handle Clamp Assembly, 18” 106
4300465 Handle Guide Assembly, 18” 107
4300170 Border Prefeed Assembly 110
4300225 Border Tension Road Assembly 111
4300285 Encoder Assembly 114
4300310 Border Tension Assembly 116
32005600 Prefeed Roller Assembly 118
32005650A Bottom Puller Roller Assembly 119
4300300 Roll Holder Assembly 120
33008300 BORDER BOX ASSY 121
4300200 Closer Assembly 124
4300130 Roll Holder Assembly 125
3200190 Closer Carriage Covers 126
4300210 Closer Console 127
3200210 Closer Stations 130
3200200 Sewing Head Assembly 131
3200195 Feed Conveyor Assembly 134
1278-6160C Dual Foot Pedal Assembly 135

4300013 Control Panel Closer 138
4300327 Primary Gripper Assembly 140
4300335 Border Support Assembly 141
4300339 Edge Guide Assembly 142
4300341 Secondary Clamp/Transport 144
32007800A Secondary Gripper Assembly 146
4300350 Guillotine Bridge Assembly 147
4300390 Indexing Tray Assembly 148
4300-PD Pneumatic Diagram 149
4300-PD1 Pneumatic Diagram, Closer 150
4300-WD Wiring Diagram 151
4300-WD1 Wiring Diagram, Closer 152

Important Safety Instruction

This part of the Instruction Material is provided for the safe use of your equipment. It contains important information to help work safely with the unit and describes the dangers inherent in machinery. Some of these dangers are obvious, while others are less evident.

Mandatory Information

All persons operating and/or working on the 4300BC should read and understand all parts of the Safety Instructions. This applies, in particular, for persons who only operate and/or work on the unit occasionally (e.g. for maintenance and repair). Persons who have difficulty reading must receive particularly thorough instruction.

Scope of the Instruction Material

- The Instruction Material comprises:
- Safety information
- Operator Instructions
- Electrical and Pneumatic diagrams

And may also include;

- A list of recommended spare parts
- Instruction Manual(s) for components made by other manufacturers
- The layout and installation diagram containing information for installation

Intended Use

Our machines are designed and built in line with the state of the art and the accepted safety rules. However, all machines may endanger the life and limb of their users and/or third parties and be damaged or cause damage to other property, particularly if they are operated incorrectly or used for purposes other than those specified in the Instruction Manual.

Exclusion of Misuse

Non-conforming uses include, for example, using the equipment for something other than it was designed for, as well as operation without duly installed safety equipment. The risk rests exclusively with the end user.

Conforming use of the machine includes compliance with the technical data, information and regulations in all parts of the complete Instruction Material, as well as compliance with the maintenance regulations. All local safety and accident prevention regulations must also be observed.

Liability

The machine should only be operated when in perfect working order, with due regard for safety and the potential dangers, as well as in accordance with the Instruction Material. Faults and malfunctions capable of impairing safety should be remedied immediately. We cannot accept any liability for personal injury or property damage due to operator errors or non-compliance with the safety instructions contained in this booklet. The risk rests exclusively with the end user.

The Instruction Material should always be kept near the machine so that it is accessible to all concerned.

The local, general, statutory and other binding regulations on accident prevention and environmental protection must also be observed in addition to the Instruction Material. The operating staff must be instructed accordingly. This obligation also includes the handling of dangerous substances and provision/use of personal protective equipment.

The Instruction Material should be supplemented by instructions, including supervisory and notification duties with due regard for special operational features, such as the organization of work, work sequences, the personnel deployed, etc.

The personnel's awareness of the dangers and compliance with the safety regulations should be checked at irregular intervals.

Choice and Qualification of Personnel

Ensure that work on the machine is only carried out by reliable persons who have been appropriately trained for such work - either within the company, by our field staff or at our office - and who have not only been duly appointed and authorized, but are also fully familiar with the local regulations. Work on the machine should only be carried out by skilled personnel, under the management and supervision of a duly qualified engineer.

This not only applies when the machine is used for production, but also for special work associated with its operation (start-up and maintenance), especially when it concerns work on the hydraulic or electrical systems, as well as on the software/serial bus system.

Training

Everyone working on or with the machine should be duly trained and informed with regard to correct use of the safety equipment, the foreseeable dangers which may arise during operation of the machine and the safety precautions to be taken. In addition, the personnel should be instructed to check all safety mechanisms at regular intervals.

Responsibilities

Clearly define exactly who is responsible for operating, setting-up, servicing and repairing the machine. Define the responsibilities of the machine operator and authorize him to refuse any instructions by third parties if they run contrary to the machine's safety. This applies in particular for the operators of machines linked to other equipment. Persons receiving training of any kind may only work on or with the machine under the constant supervision of an experienced operator. Note the minimum age limits permitted by law.

A Word to the Operator

The greatest danger inherent in our machines:
is that of fingers, hands or loose clothing being drawn into a machine by live, coasting or rotating tools or assemblies or of being cut by sharp tools or burned by hot elements.

ALWAYS BE CONSCIOUS OF THESE DANGERS!

Safety Equipment on the Machines

All machines are delivered with safety equipment, which shall not be removed or bypassed during operation.

The correct functioning of safety equipment on machines and systems should be checked every day and before every new shift starts, after maintenance and repair work, when starting up for the first time and when restarting (e.g. after prolonged shutdowns).

If safety equipment has to be dismantled for setting-up, maintenance or repair work, such safety equipment shall be replaced and checked immediately upon completing the maintenance or repair work. All protective mechanisms shall be fitted and fully operational whenever the machine is at a standstill or if it has been shut down for a longer period of time.

Damage

If any changes capable of impairing safety are observed in the machine or its mode of operation, such as malfunctions, faults or changes in the machine or tools, appropriate steps must be taken immediately, the machine switched off and a proper lockout tagout procedure followed. The machine should be examined for obvious damage and defects at least once per shift. Damage found shall be immediately remedied by a duly authorized person before resuming operation of machine.

The machine should only be operated when in perfect working order and when all protective mechanisms and safety equipment, such as detachable protective mechanisms, emergency STOP systems, etc. are in place and operational.

Faults or Errors

The machine must be switched off and all moving or rotating parts allowed to come to a standstill and secured against accidental restart before starting to remedy any faults or errors.

Signs on the Machine

Safety and danger signs on the machine should be observed and checked at regular intervals to ensure that they are complete and undamaged. They should be clearly visible and legible at all times.
Clothing, Jewelry, Protective Equipment
Long loose hair, loose-fitting clothes, gloves and jewelry, including rings, should be avoided in order to avoid injuries due to being caught, drawn in and wound up inside the machine.

Protective Eyewear

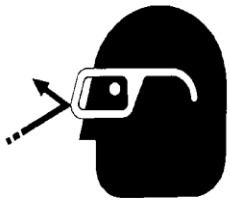

Protective eyewear that has been tested by the local authorities should be worn whenever there is a possibility of loose or flying objects or particles such as when cleaning the machine with compressed air.

Tools

Always count the number of tools in your possession before starting work on the machine. This will allow you to check that no tools have been left behind inside the machine. Never leave a tool in the machine while working.

Oils, Lubricants, Chemicals

Note the applicable safety regulations for the product used.

No Smoking, Fire, Explosion Hazard

Smoking and open flame (e.g. welding work) should be prohibited in the production area due to the risk of fire and explosions.

Workplace

A clear working area without any obstructions whatsoever is essential for safe operation of the machine. The floor should be level and clean, without any waste.

The workplace should be well lit, either by the general lighting or by local lights.

Emergency STOP

The emergency STOP buttons bring all machine movements to a standstill. Make sure you know exactly where they are located and how they work. Try them out. Always ensure easy access to the nearest emergency STOP button while working on the machine.

First Aid

1. Keep calm even when injured.
2. Clear the operator from the danger zone. The decision of what to do and whether to seek additional assistance rests entirely with you, particularly if someone has been trapped.
3. Give First Aid. Special courses are offered by such organizations as the employers' liability insurance association. Your colleagues should be able to rely on you and vice versa.
4. Call an ambulance. Do you know the telephone numbers for the ambulance service, police and fire service?

Important Notices

Reporting and Fighting Fires

Read the instructions posted in the factory with regard to reporting fires and the emergency exits. Make sure you know exactly where the fire extinguishers and sprinkler systems are located and how they are operated. Pass on the corresponding information to the firemen when they arrive. Ensure there are enough signs to avoid fire hazards.

The following fire extinguishers may be used:
- Dry powder extinguishers, ABC fire-extinguishing powder.
- Carbon dioxide fire extinguishers to DIN 14461 for electronic components. Great care must be exercised when using carbon dioxide fire extinguishers in confined, badly ventilated rooms (see DIN 14406 and 14270).

Isolate the machine from the power supply if a fire breaks out. Do not use water on burning electrical parts until it is absolutely certain that they have been completely disconnected from the power supply. Burning oils, lubricants, plastics and coatings on the machine can give off gases and vapors that may be harmful to your health.
A qualified person should be consulted to repair the damage after a fire.

Electrical Power Supply

Before undertaking any maintenance or repair work on the machine, switch off the electrical power to the machine at the main source and secure it with a padlock so that it cannot be switched on again without authorization.
In practice, this may mean that the technician, electrician and operator all attach their own padlock to the master switch simultaneously so that they can carry out their work safely. Locking extension plates should be available for multiple locks if required. The primary purpose for a lockout/tagout procedure is to protect workers from injury caused by unexpected energizing or start-up of equipment.

Energy sources (electrical/pneumatic/hydraulic, etc.) for the equipment shall be turned off or disconnected and the switches locked or labeled with a warning tag. It is the responsibility of the employer to establish control procedures. Follow lockout/tagout procedures before, setup and/or any service or maintenance work is performed, including lubrication, cleaning or clearance of jams.

Caution: The machine is still not completely de-energized even when the master switch is off.

- Electricity - The machine is always isolated from the electrical power supply whenever the master switch has been switched off. However, this does not apply for the power supply in the control cabinet, nor for equipment that does not draw its power via the master switch.

- Pneumatic / hydraulic energy - Almost all our machines carry compressed air. In addition to switching off the master switch, the air supply must also be disconnected and the machine checked to ensure it is depressurized before starting any work on the machine; otherwise the machine may execute uncontrolled movements.

- Kinetic energy - Note that some motors or spindles, for example, may continue to run or coast run on after being switched off.

- Potential energy - Individual assemblies may need to be secured if necessary for repair work.

Delivery of the Machine/Packaging

Note any markings on the packaging, such as weights, lifting points and special information. Avoid temperature fluctuations. Condensation may damage the machine.

Transport Damage

The packaging and machine must immediately be examined for signs of damage in transit. Such damage must be reported to the shipper/transporter within the applicable time limits. Contact Atlanta Attachment Company and/or your transport insurer immediately, if signs of damage are visible. Never operate a damaged machine.

Interim Storage

If the machine has to be stored temporarily, it must be oiled or greased and stored in a dry place where it is protected from the weather in order to avoid damage. A corrosion-inhibiting coating should be applied if the machine has to be stored for a longer period of time and additional precautions taken to avoid corrosion.

Transporting the Machine

Disconnect the machine from all external connections and secure any loose assemblies or parts. Never step under a suspended load. When transporting the machine or assemblies in a crate, ensure that the ropes or arms of a forklift truck are positioned as close to the edge of the crate as possible. The center of gravity is not necessarily in the middle of the crate. Note the accident prevention regulations, safety instructions and local regulations governing transport of the machine and its assemblies.

Only use suitable transport vehicles, hoisting gear and load suspension devices that are in perfect working order and of adequate carrying capacity. Transport should only be entrusted to duly qualified personnel.

Never allow the straps to rest against the machine enclosure and never push or pull sensitive parts of the machine. Ensure that the load is always properly secured. Before or immediately after loading the machine, secure it properly and affix corresponding warnings.
All transport guards and lifting devices must be removed before the machine is started up again. Any parts that are to be removed for transport must be carefully refitted and secured before the machine is started up again.

Workplace Environment

Our machines are designed for use in enclosed rooms: Permissible ambient temperature approx. 5 - 40 °C (40 - 104 °F). Malfunctions of the control systems and uncontrolled machine movements may occur at temperatures outside this range.
Protect against climatic influences, such as electrostatic charges, lightning strikes, hail, storm damage, high humidity, salinity of the air in coastal regions.

Protect against influences from the surroundings: no structure-borne vibrations, no grinding dust, or chemical vapors.
Protect against unauthorized access.
Ensure that the machine and accessories are set up in a stable position.
Ensure easy access for operation and maintenance (Instruction Manual and layout diagram); also verify that the floor is strong enough to carry the weight of the machine.

Local Regulations

Particular attention must be paid to local and statutory regulations, etc. when installing machines and the plant (e.g. with regard to the specified escape routes). Note the safety zones in relation to adjacent machines.

Maintenance

General Safety Instructions

The machine shall be switched off, come to a standstill and be secured so that it cannot be switched on again inadvertently before starting any maintenance work whatsoever. Use proper lockout/tagout procedures to secure the machine against inadvertent startup.
Remove any oil, grease, dirt and waste from the machine, particularly from the connections and screws, when starting the maintenance and/or repair work. Do not use any corrosive-cleaning agents. Use lint-free rags.
Retighten all screw connections that have to be loosened for the maintenance and repair work. Any safety mechanisms that have to be dismantled for setting-up, maintenance or repair purposes must be refitted and checked immediately after completing the work.

Maintenance, Care, Adjustment

The activities and intervals specified in the Instruction Manual for carrying out adjustments, maintenance and inspections must be observed and parts replaced as specified.

All hydraulic and pneumatic lines should be examined for leaks, loose connections, rubbing and damage whenever the machine is serviced. Any defects found must be remedied immediately.

Waste, Disassembly, Disposal

Waste products should be cleared from the machine as soon as possible as not to create a fire hazard. Ensure that fuels and operating lubricants, as well as replacement parts are disposed of in a safe and ecologically acceptable manner. Note the local regulations on pollution control.

When scrapping (disassembling) the machine and its assemblies, ensure that these materials are disposed of safely. Either commission a specialist company familiar with the local regulations or note the local regulations when disposing of these materials yourself. Materials should be sorted properly.

Repair

Replacement Parts

We cannot accept any liability whatsoever for damage due to the use of parts made by other manufacturers or due to unqualified repair or modification of the machine.

Repair, Electrical

The power supply must be switched off (master switch off) and secured so that it cannot be switched on again inadvertently before starting any work on live parts.

Those parts of the machine and plant on which inspection, maintenance or repair work is to be carried out must be isolated from the power supply, if specified. The isolated parts must first be checked to determine that they are truly de-energized before being grounded and short-circuited. Adjacent live parts must also be isolated.

The protective measures implemented (e.g. grounding resistance) must be tested before restarting the machine after all assembly or repair work on electric parts.

Signal generators (limit switches) and other electrical parts on the safety mechanisms must not be removed or bypassed. Only use original fuses or circuit overloads with the specified current rating. The machine must be switched off immediately if a fault develops in the electrical power supply.

The electrical equipment of our machines must be checked at regular intervals and any defects found must be remedied immediately.

If it is necessary to carry out work on live parts, a second person should be on hand to operate the emergency OFF switch or master switch with voltage release in the event of an emergency. The working area should be cordoned off and marked by a warning sign. Only use electrically insulated tools.

Ventilation/Hazardous Gases

It is the end users responsibility to ensure adequate ventilation is provided to exhaust any and all noxious or hazardous gases that may be present in the working environment.

Hydraulic and Pneumatic Systems

Work on hydraulic or pneumatic equipment shall only be carried out by persons with training, knowledge and experience of hydraulic systems. Pressure lines shall be depressurized before starting any repair work.

General Liability

Liability for machine damage and personal injury is extinguished completely if any unauthorized conversions or modifications are undertaken. The machine must not be modified, enlarged or converted in any way capable of affecting safety without the manufacturer's prior approval.

Starting Machine Movements

Read the Instruction Manual carefully to establish which keys and functions start machine movements.

A Word to the End User

The end user has sole responsibility to enforce the use of safety procedures and guards on the machine. Any other safety devices or procedures due to local regulations should be should be retrofitted in accordance to these regulations and/or the EC Directive on the safety of machines.

Operator's position must always be readily accessible. Escape routes must always be kept clear and safety areas should be identified.

Safety Precautions

Safety should be a constant concern for everyone. Always be careful when working with this equipment. While normal safety precautions were taken in the design and manufacture of this equipment, there are some potential safety hazards.

Everyone involved with the operation and maintenance of this equipment should read and follow the instructions in this manual.

Operate the equipment only as stated in this manual. Incorrect use could cause damage to the equipment or personal injury.

It is the owner's responsibility to make certain that the operator reads and understands this manual before operating this equipment. It is also the owner's responsibility to make certain that the operator is a qualified and physically able individual, properly trained in the operation of this equipment.

Specific safety warning decals are located on the equipment near the immediate areas of potential hazards. These decals should not be removed or obliterated. Replace them if they become non-readable.

- ALWAYS keep safety shields and covers in place, except for servicing.
- ALWAYS operate equipment in daylight or with adequate working lights.
- Follow daily and weekly checklists, making sure hoses are tightly secured and bolts are tightened.
- ALWAYS watch and avoid holes or deep depressions.
- ALWAYS wear adequate eye protection when servicing the hydraulic system and battery.
- NEVER operate a poorly maintained machine.
- NEVER allow persons to operate this machine without proper instruction.
- NEVER put hands or feet under any part of the machine while it is running.
- NEVER attempt to make any adjustments or repairs to the machine while running. Repairs or maintenance should be performed by trained personnel only.
- NEVER work under the machine unless it is safely supported with stands, blocks or a hoist and blocks.
- NEVER touch hot parts of machine.

	Read General Information Symbol		Hazard warning sign: Rotating parts, risk of entanglement Keep hands, loose clothing and long hair away from moving parts.
	Mandatory eye protection		Hazard warning sign: Electrical hazard, electrical hazard
	Keep Guards In Place		Hazard warning sign: General Hazard
	Hazard warning sign: Beware of damage to hands.		

1.- INSTALLATION MANUAL

It is important that the machine operator read this manual and is familiar with all the functions and safety concerns of the unit before Installing and operating.

1.1.- Parts and Components

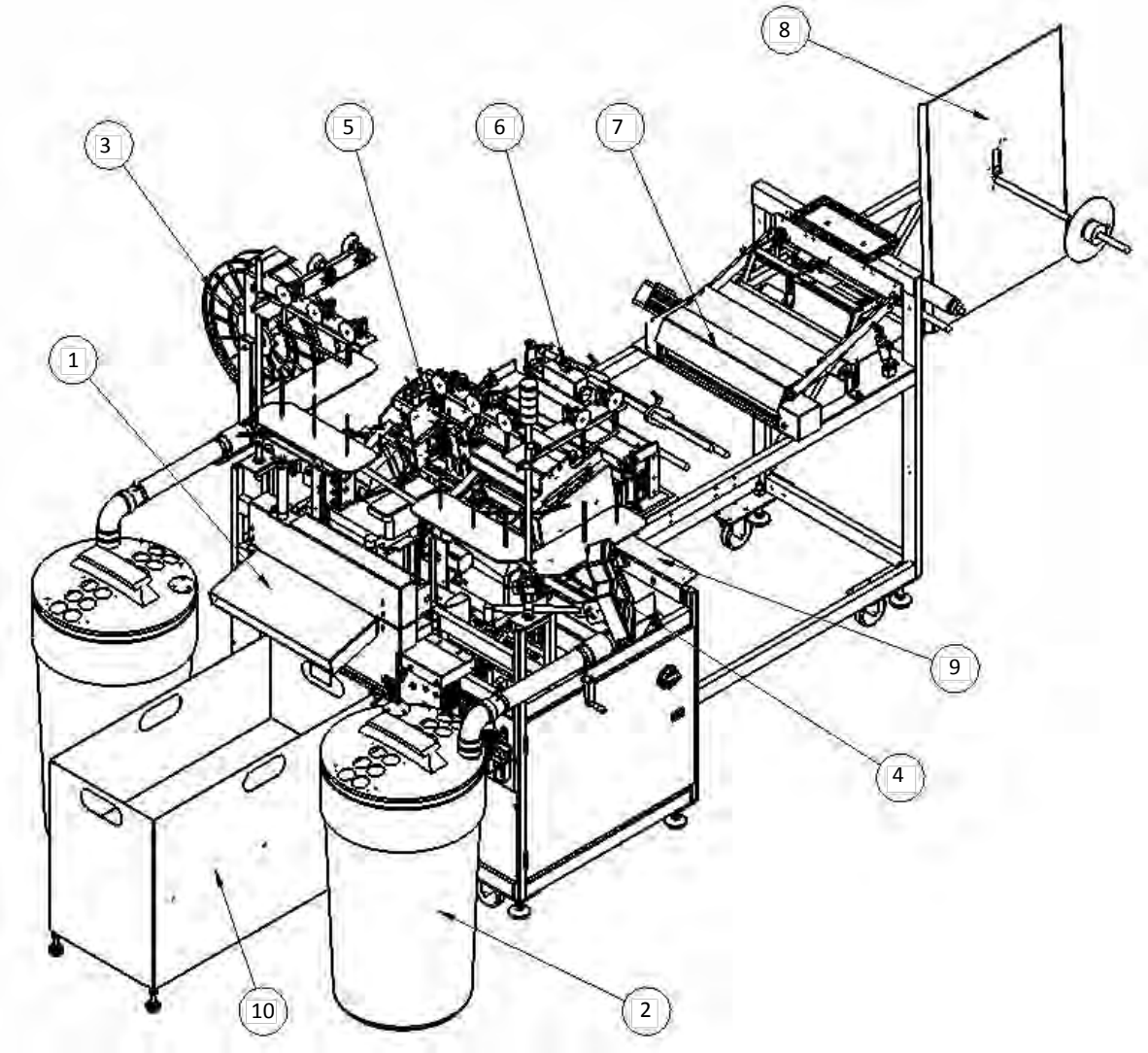

	Description		
1	Gulliotine Assembly	6	Border Tension Rod Assembly
2	Waste Assembly	7	Border Feed Assembly
3	Roll Holder Assembly	8	Roll Holder Assembly
4	Console, Left & Right Head	9	Linear Rail MTG Brkt
5	Handle Cut Insert, 18"	10	Border Box Assembly

1.2.- Technical Data

Max Speed	5.000 rpm
Max Stitch Length	6 spi
Border Width	8.5 to 18”
Handle Width	1.5 to 2” (up to 3” handle upon request)
Factory Pre-set Speed	5000 rpm
Factory Pre-set Stitch length	6 spi
Linear Output	69 ft/min
Handle Load Speed	39 ft/min
Power	220~240VAC, 1PH, 15A
Air	14 scfm @ 80psi
Needle	SNB27140
Right Sewing head	SPEGEX3216H
Left Sewing head	SPEGE32L450
Foot Print	166 Length x 82 Width x 77 Height
Machine weight	1400 lbs.
Production	2 queen size borders per minute with 4 handles

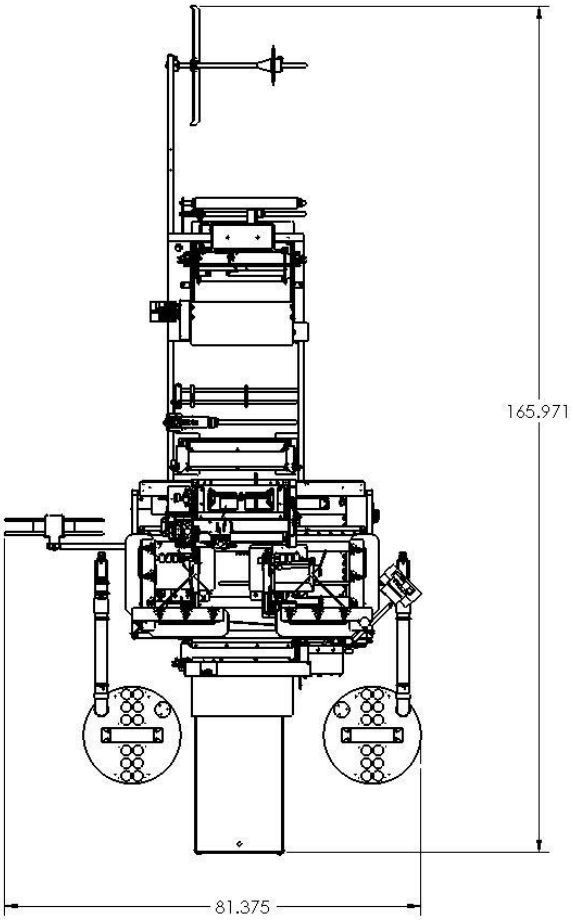

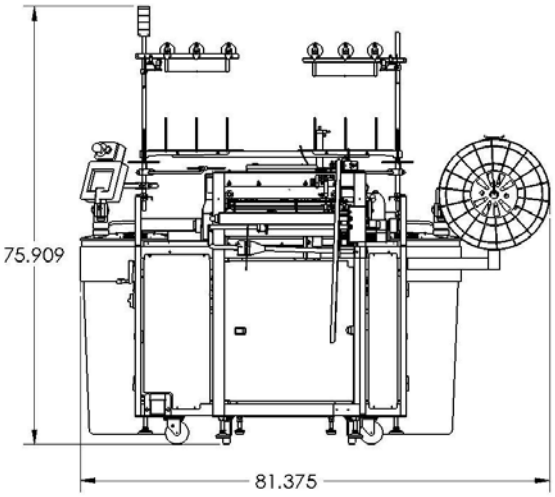

1.3.- Installation & Set Up

- Remove any shipping straps from machine.
- Inspect the machine for any damage that may have occurred during shipping. If damage is found, report this immediately to your supervisor. Document the damage and provide details and photographs.
- Position the machine in a desired location on a sound and reasonably level floor. Make sure that there is sufficient lighting over the machine. Remove all packing material. Adjust the jack screws so the casters are about 1/8 of an inch off the floor.
- Provide a 220VAC, single phase, 15 Amp
- Provide 1/4" air supply line (80 PSI).

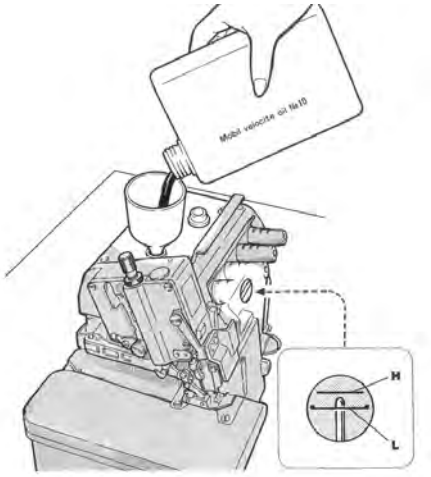

- Oil is removed before shipping. Prior to using refill and check the oil level in both sewing heads. (ISO Viscosity Grade 22 part #)

- Turn the main air lock-out valve (Red Knob before the main pressure regulator) to the “ON” position.

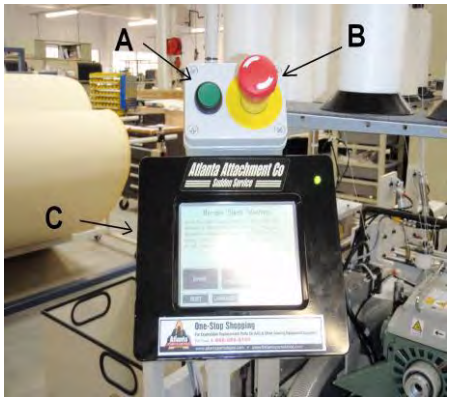

- Twist the Red button “B” to return to its normal position. Turn the machine “ON” by pressing the green button “A” on the box just above the touch screen. The machine will first display the language choices and after several seconds its show the “MAIN READY” screen. This screen is the one that the operator will always see upon power up

1.4.- Lockout/Tagout Program

"Lockout/Tagout (LOTO)" refers to specific practices and procedures to safeguard employees from the unexpected energization or startup of machinery and equipment, or the release of hazardous energy during service or maintenance activities. This requires that a designated individual turns off and disconnects the machinery or equipment from its energy source(s) before performing service or maintenance and that the authorized employee(s) either lock or tag the energy-isolating device(s) to prevent the release of hazardous energy and take steps to verify that the energy has been isolated effectively. The following references provide information about the LOTO process.

Equipment Energy Control Procedure
Lockout/Tagout Program

Description:	Border Workstation	Model:	**4300**
Manufacturer:	Atlanta Attachment Co.	Location:	

Energy		Location	Magnitude	Control Method
Electrical:	X	Disconnect/Ctrl Box	220V	Lockout & Tag
Pneumatic:	X	Main Regulator	90 PSI	Lockout & Tag
Gravity:	X	Folder Assy, Knife Assy, Transfer Clamp		

Remember to Release All Stored Energy!

Shutdown Procedure:

1. Inform all affected personnel that the machine will be in Lockout status.
2. Turn the power and pneumatic disconnects to the OFF position.
3. Fill out the tag with necessary information of the Lockout.
4. Install the Lockout device.
5. Verify all stored electrical energy has been released by pressing the power on button

. Also, use meter to test circuits in the electrical panel to insure stored energy is released there as well.

Perform necessary maintenance, services and/or repairs.

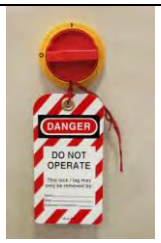

Startup Procedure:

1. Inform all affected personnel that the Lockout of this machine is being removed.
2. Replace any guards or safety devices which may have been removed during maintenance.
3. Remove the Lockout device and tag.
4. Turn the power and pneumatic disconnects to the ON position.
5. Push the green button on the back of the control panel to turn the machine on.
6. Inform all affected personnel that the Lockout has been removed and that the machine is ready for normal production operation.

Approved By: _____ Date: _____

2.- OPERATING MANUAL

It is important that the machine operator read this manual and is familiar with all the functions and safety concerns of the unit before operating.

2.1.- Individual Components

2.1.1.- Control Panel

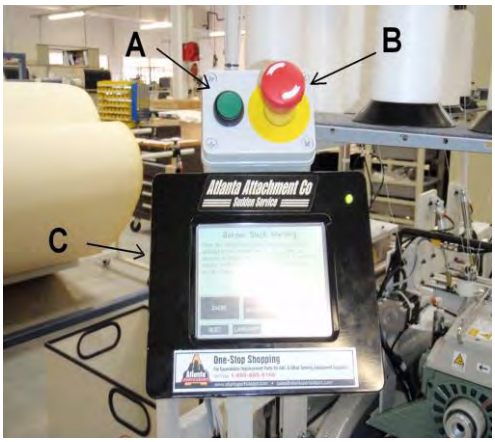

The Control Panel allows the operator to start and stop the automatic function of the machine, shut off power to the machine in the event of an emergency.

A.- Emergency Stop (B)
Pressing this button will turn off power to the machine. This button will lock when pressed. Twisting the button will cause it to unlock and return to its normal position.

WARNING!! Unlocking the button with the Power On engaged will turn on power to the machine.

B.- Power On (A)
Power the machine "ON".

C.- Serial Bus control
Controls all machine functions. See more details available on related chapters in this manual

2.1.2.- Light Tower 33001130

The purpose of the light tower is to indicate current status of the machine at some distance away from the machine. This makes it easy to see machine status at a glance. Definitions for the different light states currently available on the 4300 are included below.

Light Status	Definition
Green Steady	Normal, machine producing borders
Green Flashing:	Machine producing borders but will stop soon for bobbin change
Yellow Steady	Normal: machine powered but idling between borders
Yellow Flashing:	Machine stopped in middle of order and needs operator activity before continuing
Red:	Available for future use, not currently utilized

2.1.3.- Foot Pedal EE24F163

It is located on the front left corner of the sewing unit. It is used for a manual activation of the sewing cycle or when loading a new roll of materials.

2.1.4.- Left Head Adjustment Crank

It is located on the left side of the machine. It allows the operator to move the Left Head to adjust the width of fabric ranging from 0 to 18 inches wide.

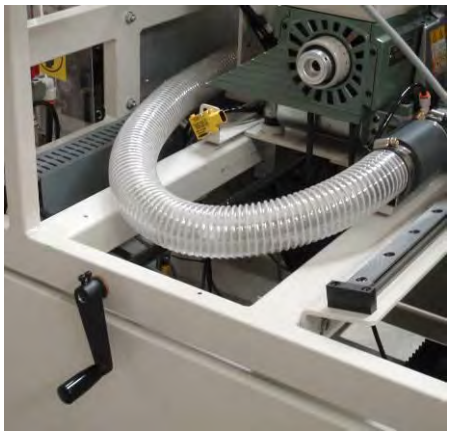

2.1.5.- Removing the Handle Loader

Release Pin “A” and you are able to move the complete handle loading / cutting station sideway in order to reach both sewing heads.

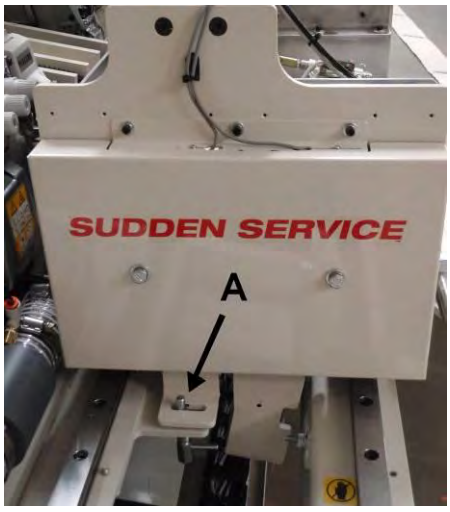

2.1.6.- Efka Control Box

There are 4 units located under the machine. They contain an On/Off switch which should remain in the "ON" position at all times, Puller, Sewing heads and Pre-feeder are controlled by these boxes

2.1.7.- Stepping Motors Control Boxes

There are 4 control boxes located under the machine. They control the Top Feed Belt, Handle loading and Handle feeding.

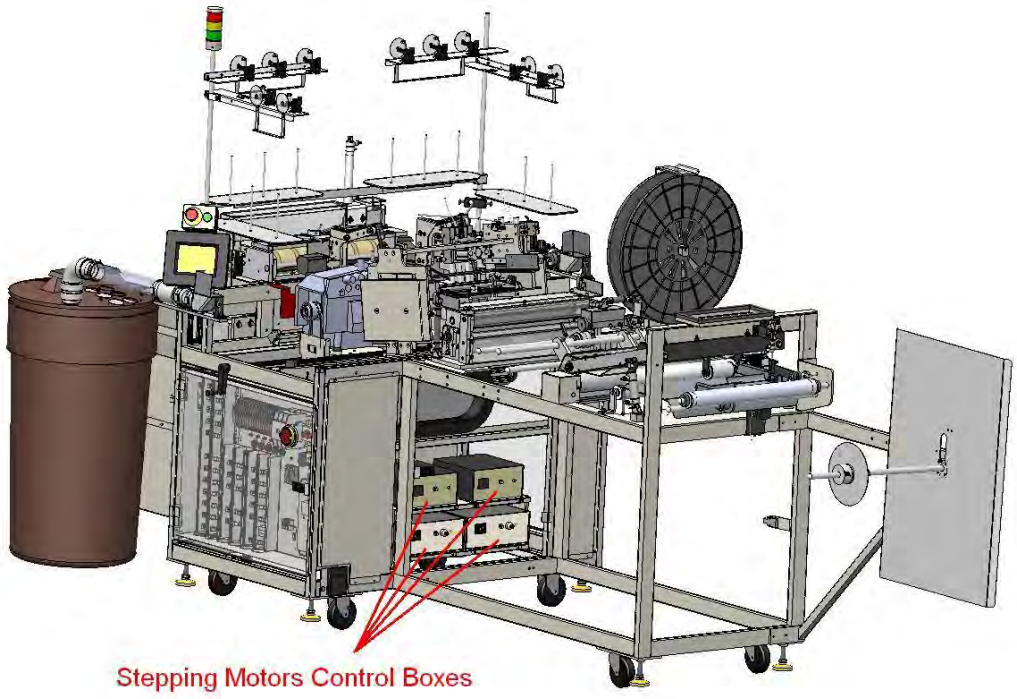

All 4 amber lights must be on during machine operation. Each box has a power switch located at the rear of the box.

2.2.- Touch-Screen

It is important that the machine operator read this manual and is familiar with all the functions and safety concerns of the unit before operating.

2.2.1.- General Operation

ATTENTION: DO NOT USE ANY SHARP OBJECTS TO TOUCH THE SCREEN

The graphics images presented on the touch screen show "3-dimensional" buttons, which may be pressed to access other screens, change counters and timers, or actuate hardware. Areas lacking the "3- dimensional" border contain information only.

Counters are identified with the "+" and "-" buttons in the corners. These counters may be adjusted by touching the "+" and "-" boxes.

RESET : Clears all machine functions and returns to the main page.
time and date.

LANGUAGE: Return to the language screen. You can select multiple languages to use.

HOME: Return to the main screen

ARROWS: Pressing the arrows right or left will take you to the next or previous pages.

NOTES: When a button has a white background the function is on or enabled. A dark background indicates off or disabled. Some buttons may toggle on or off, others must be held on.

Other screens display whenever there is a machine error or other condition that prohibits the operation of the machine. Simply follow the instruction on the screens to resolve the problem.

There are also “ADVANCED” settings and functions available. These functions are only accessible by a password, and include: timers that control machine hardware, input and output test screens, and machine statistics. To get to the advanced functions the appropriate password must be entered at the security screen. Security access is reset whenever the main power is turned off, or the RESET button on the main page is pressed. The factory default access code is "33333".

2.2.2- Available Menus

The following is a summary of the different screens and their functions available for the Sewing Operator.

1.- Ready - New Order

The normal operation of the machine is controlled from the main READY - NEW ORDER menu. From here you can start the automatic cycle and access all machine functions.

START: After touching this field the machine automatic function is activated.

LANGUAGE: This field is located in almost all the available screens. Select at any time to access other languages.

OPERATOR SCREEN: See a section in this book with more details about this screen.

EDIT NEW ORDER: See a section in this book with more details about this screen.

OPEN ALL ROLLERS: Used to load handles or new roll of material.

ADVANCE FUNCTIONS: Area reserved only for technicians

PIECE COUNT: The field on the left of the clock button is the piece counters that increment every time the border cycle is complete. Touching on this area will bring up a screen to reset this count. This counter can be used for a daily production monitor. On this screen is also located an efficiency monitor that displays the machine run time vs. the machine on time and displays it as a percentage.

CLOCK: Lower right button allows access to a screen for setting the correct time.

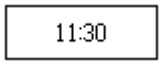

2.- Operator Screen

Operator is able to control basic functions of the machine

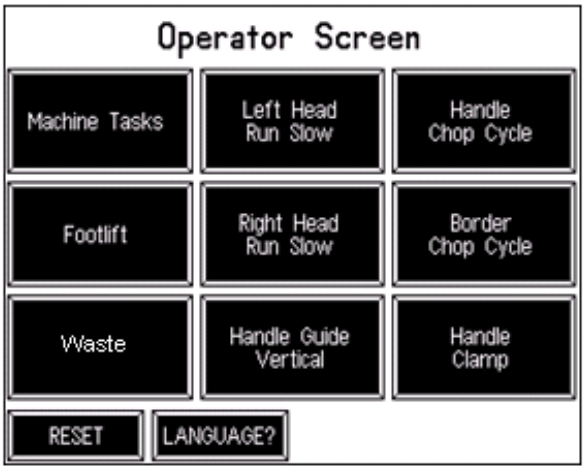

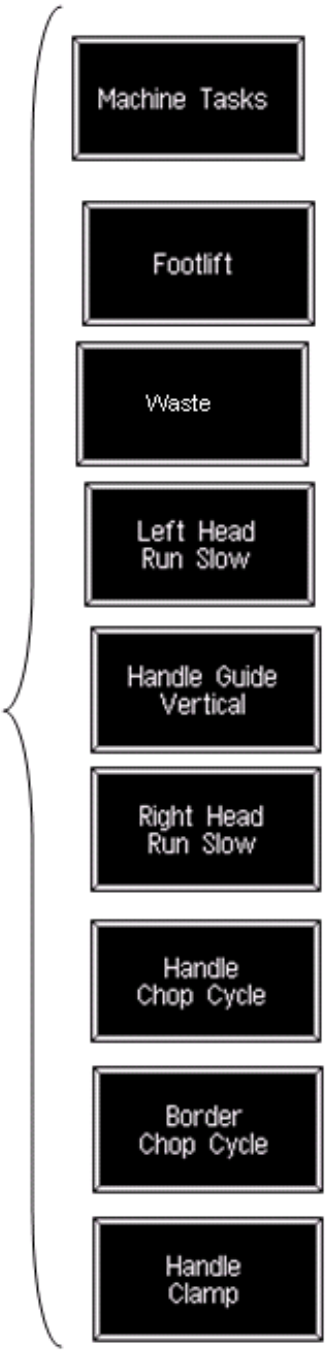

See MACHINE TASK section for details.

Rise the sewing head presser foot.

Turn on Waste Venturi

Left head Start sewing at low speed

Right Head start sewing a low speed

Activate the handle Chop cycle

Activate the border shop cycle

Activate the Handle clamp

3.- Edit Order

Access from “READY-NEW ORDER” screen. Operator will be able to edit several Order parameters.

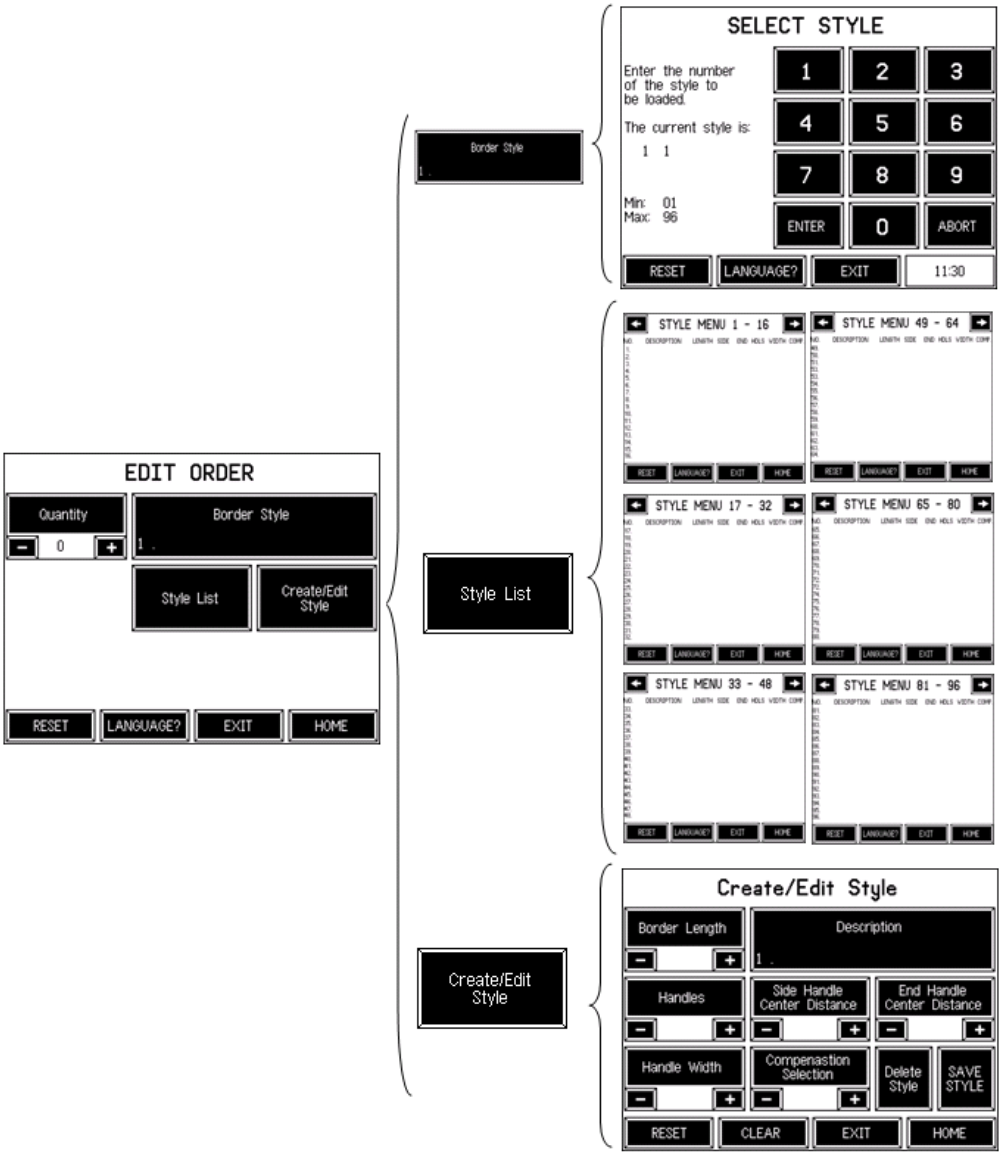

Type the number of the style required. See style number on the Style list area

Storage off all the styles available

See CREATE /EDIT Style section for details

4.- Create / Edit Style

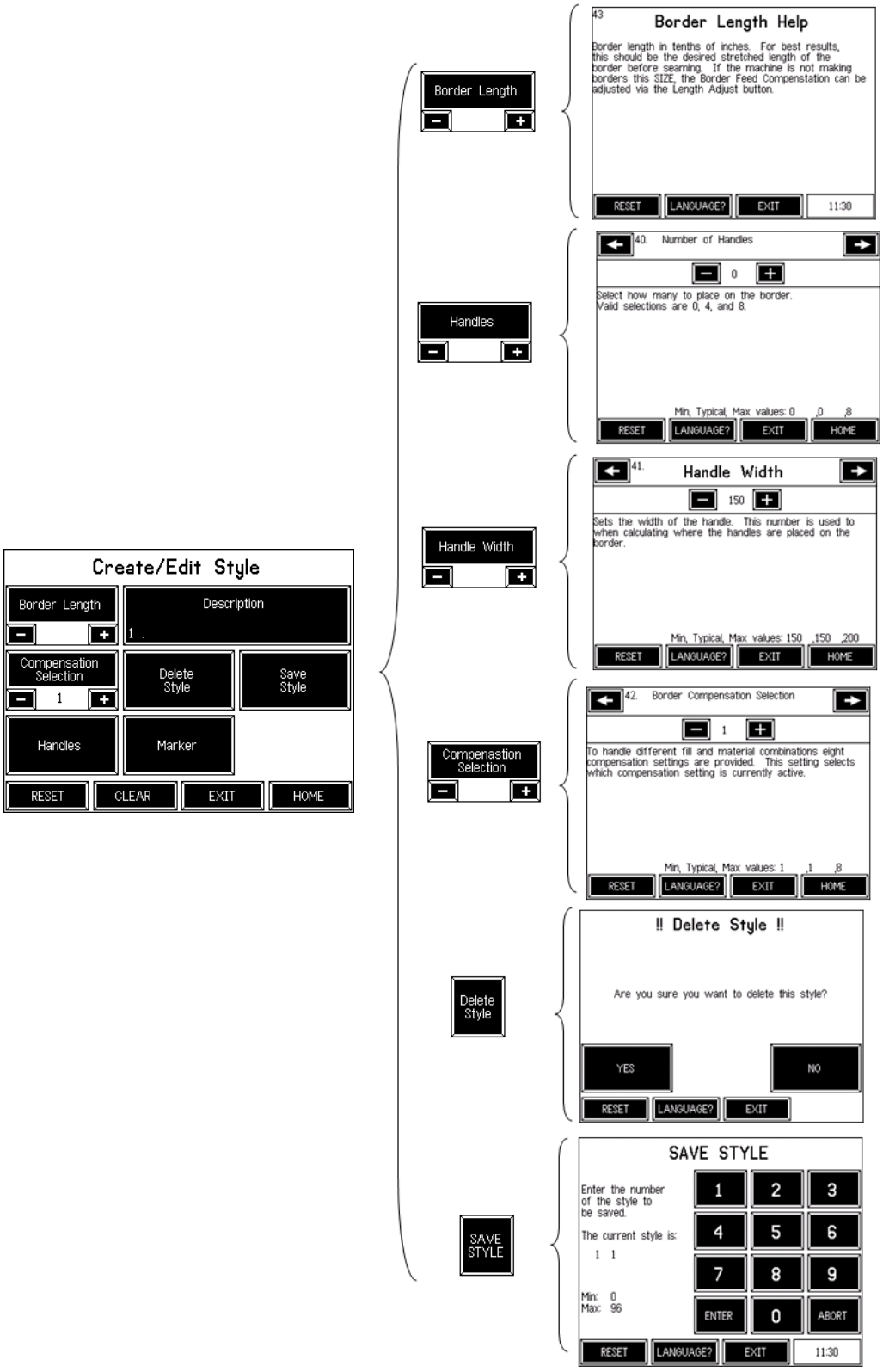

5.- Advance Functions

This screen allows access to SECURITY, SYSTEM INFORMATION, SHOW ALL SETTINGS, ADVANCED SETUP, MANUAL, and CONTRAST.

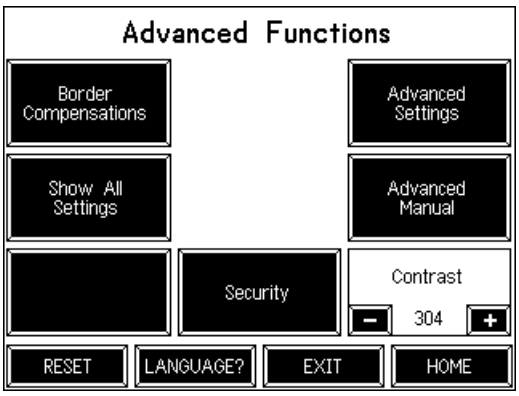

BORDER COMPENSATIONS: See next chapter for details.

The SHOW ALL SETTINGS page displays all machine settings as a matrix and is useful for recording all settings prior to a program update or for future reference.

The SECURITY button accesses the security screen for changing the pass codes. Contact an Atlanta Attachment technician for instructions on changing the pass code.

The CONTRAST button changes the screen contrast using the "+" and "-" buttons. Press EXIT anytime to return to the previous or “HOME” to return to the MAIN screen.

ADVANCE SETTINGS and ADVANCE MANUAL are restricted areas for Technician; they can only by accessed by the use of a password.

2.3.- Changing the Needle

Please follow all safety procedures, turning the power off to the machine is recommended.

1. Locate the needle screw, on the front side of the needle chuck.

2. Insert a small Allen screw driver and loosen the screw. Do not remove the screw. Remove the old needle.

3. Insert the new needle into the needle hole at the bottom of the needle chuck, push up until it stops.

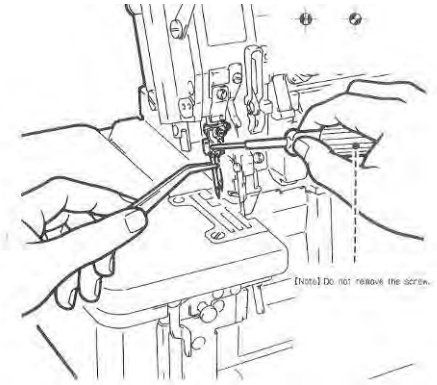

4. Turn the needle until the scarf of the needle is pointing to the back as seen on the picture below. Tighten the needle screw.

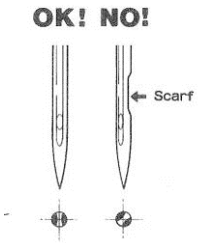

NEEDLE SYSTEM: SBN217140

2.4.- Threading

Please follow all safety procedures, turning off power is recommended.

All threads are located on top of the machine.

1.- Follow pictures for threading

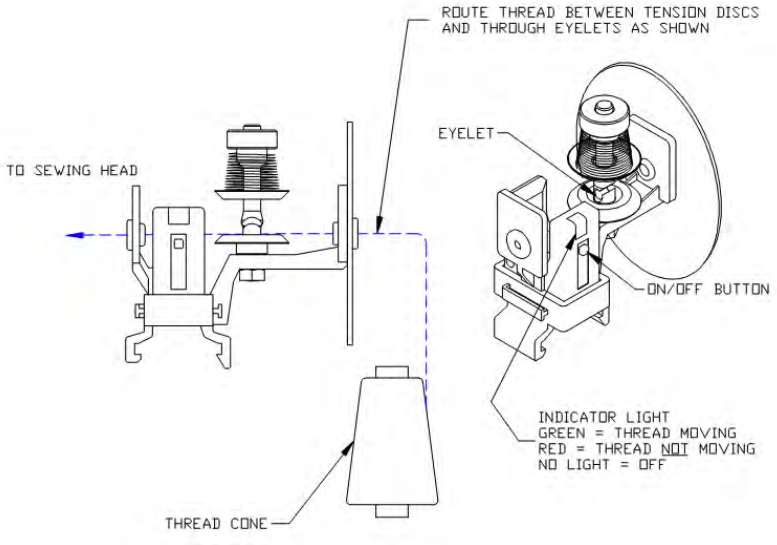

Left Sewing Head "Serger"

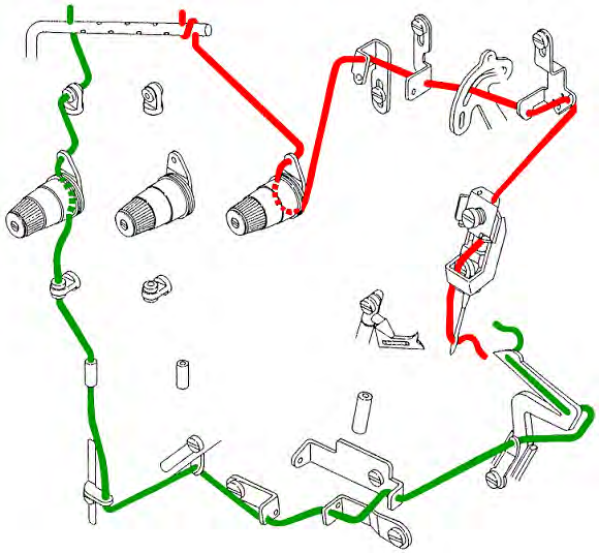

Left Sewing Head "Chainstich"

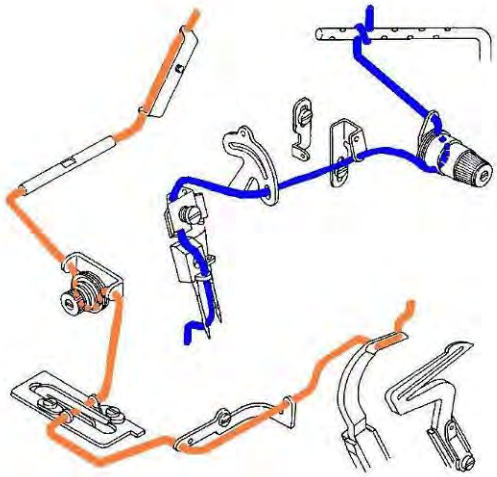

Right Sewing Head "Serger"

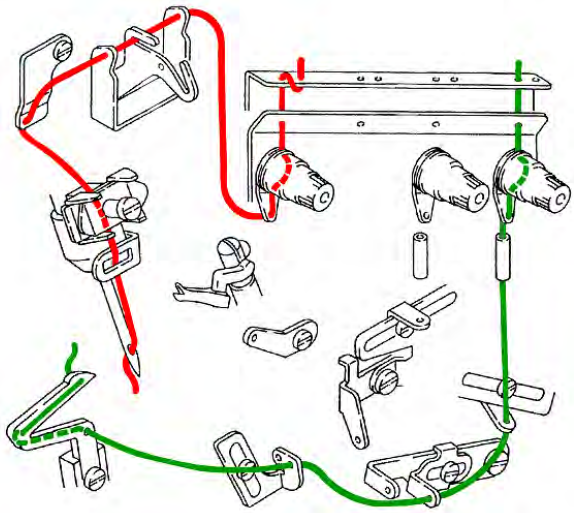

Right Se wing Head "Chainstich"

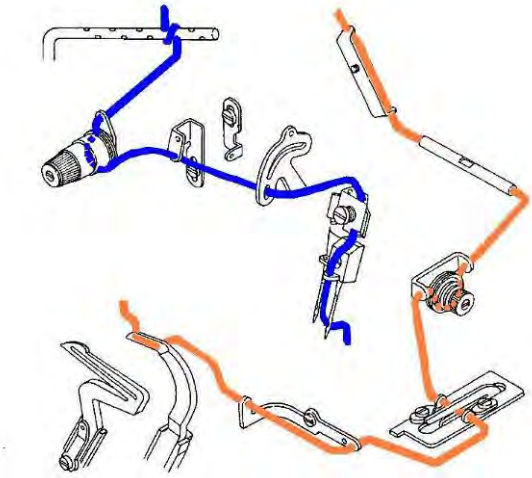

2.5.- Loading Materials

2.5.1.- Initial Border Loading Procedure

It is important that the machine operator read this manual and is familiar with all the functions and safety concerns of the unit before operating.

1. Turn power "ON" by pressing the On button on the Main Power Switch and wait until machine arrives to READY-NEW ORDER screen

2. Press OPEN ALL ROLLER button, the PRE-FEED ROLLER and the MAIN ROLLER lift up.

3. Open the material guides wider than the expected border width to be loaded.

4. Load a roll of border material on the border roll loading pin. If the leading edge of the border is not of good quality, or it is not square, cut off the bad part and square off the leading edge. This will make the border loading process much easier.

5. Feed the border between the 2" roller and the 3/4" rod, across the Pre-feed table, down through the opening and under the lower roller, back up through the opening and between the Pre-feed drive rollers.

6. Using the Left Head Adjustment Crank set the Left head to the desired finished width, Feed fabric through guide assembly: over first bar, under second, then into the front guides on the main frame, across.

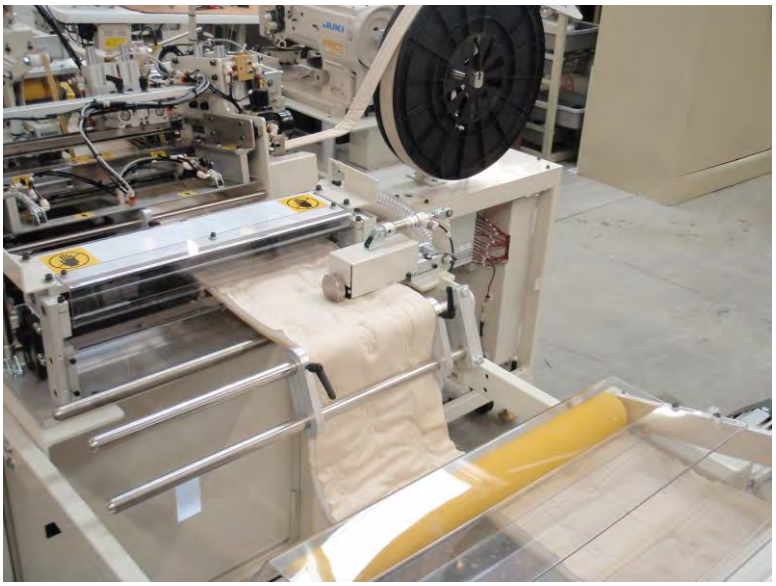

7. Place the leading edge of the fabric under the foot of the right sewing head. Turn the head over by hand and check for interference problems and make sure machine is forming a stitch.

8. Using the foot pedal, run the right head and gently pull the fabric until the leading edge of the fabric is at the foot of the left head.• Place the leading edge of the fabric under the foot of the left sewing head.

9. Turn the head over by hand and check for interference problems and make sure machine is forming a stitch.

10. Using the foot pedal, run both heads and gently pull the fabric until the leading edge the fabric is between the feed rollers through the guillotine and stop with the end of the border protruding slightly beyond the knife blades. Adjust the guides to fit the border size. Hold the border in place and press the "CLOSE ROLLERS" button.

11. On “OPERATOR SCREEN” press “BORDER CHOP CYCLE” to release the first piece of border.

NOTE: If you get a message “Border Slack Warning” on the screen, walk over to Pre-feed part of the machine and press the “OPEN ALL ROLLER” push button mounted on the cover of the Pre-feed roller, pull the slack out, and press the button again to lower the Pre-feed roller.

If the message “Border Slack Warning” comes up again with no slack present, most likely the slack eye is not adjusted properly to see the reflective tape on the side panel of the machine, or that the eye is not working properly and needs to be checked.

2.5.2.- Handle Indexer Loading Procedure.

For the optimum performance and minimal machine downtime, you need to obtain two or more spools part # MMSPOOL2.13B of handle strap and store them near the machine. This method will allow quick handle spool changing when one spool runs out of material, and gives the operator some time to prepare the next spool while the machine is running.

Position the spool as shown.

1. Activate pneumatic switch “A” (AA41V) to open the handle clamp.

2. Load the handle through the handle guide. Readjust the guide if necessary

3. Return the pneumatic switch to the original position.

4. On Operator Screen press “HANDLE CHOP CYCLE” to square up the end of the handle material.

2.5.3.- Border Splicing Method

When the machine runs out of border material it stops, and automatically back feeds about 10 inches to make the border splicing easier. The screen displays an "Out of Border Material" message. To make the operation of the 4300 machine more efficient, the border splicing on the Serging Station must be performed correctly. See below for details.

1.- From a Wide Material into a Narrow Material.

a.- Load the next border roll on the pin, and staple its leading edge to the trailing edge of the border currently in the machine **"A".** Make sure the new roll is stapled or sewn on top of the old one

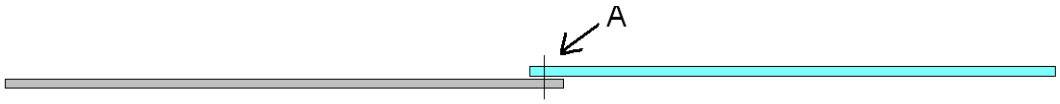

b.- Cut an Insert on the wide border as show **"B"**

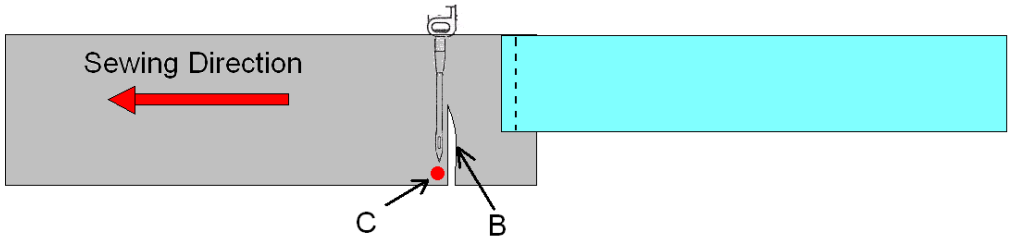

c.- Run the machine and stop the needle at position **"C"**

d.- Adjust guides to the new dimension and move the sewing head using the Adjusting Crank

e.- Continue running pressing the Foot Pedal until you pass the Border Knife.

f.- Activate a cutting cycle to remove the Splice., Continue in automatic mode

1.- From a Narrow Material into a Wide Material.

a.- Load the next border roll on the pin, and staple its leading edge to the trailing edge of the border currently in the machine **"A".** Make sure the new roll is stapled or sewn on top of the old one

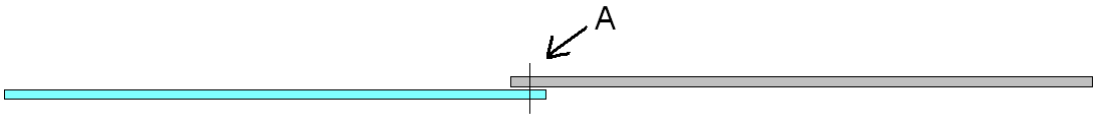

b.- Cut an Insert on the narrow border as show **"B"**

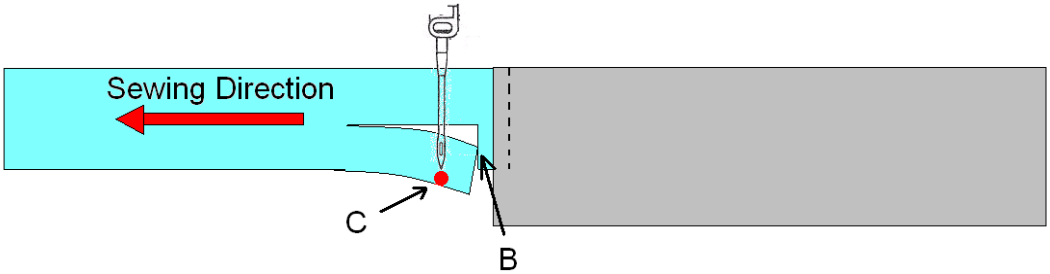

c.- Run the machine and stop the needle at position **"C"**

d.- Adjust guides to the new dimension and move the sewing head using the Adjusting Crank

e.- Continue running pressing the Foot Pedal until you pass the border Knife.

f.- Activate a cutting cycle to remove the Splice., Continue in automatic mode

2.6.- Creating a Style

On the "CREATE/EDIT STYLE" Menu proceed as following:

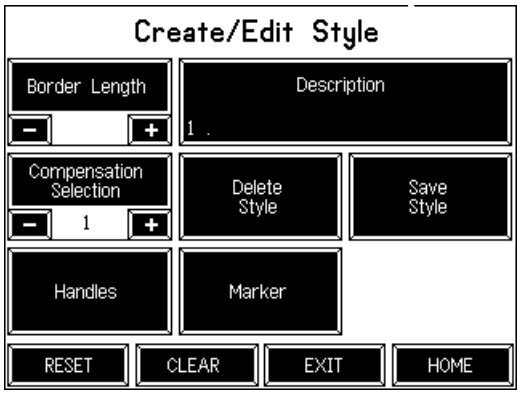

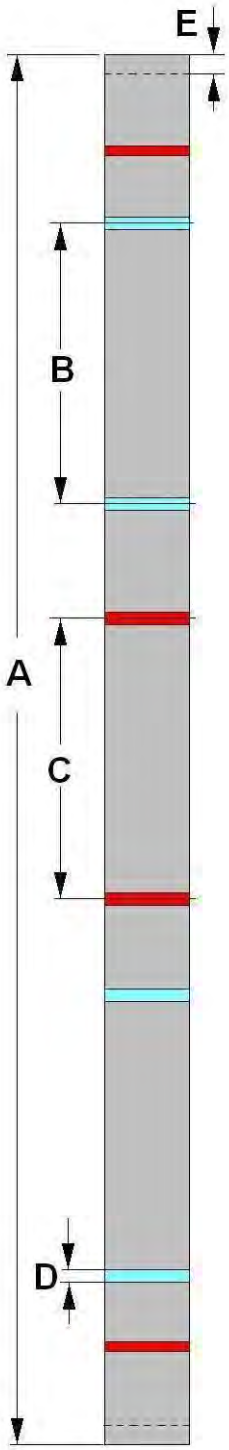

1. Select "BORDER LENGTH" and introduce the dimension "A": from your border. Units are displayed in tenths of inches Example 314.25 inches

2. Select HANDLES" and introduce the amount of handles you will require. You are able to select from 0. 4 or 8 handles. Example 4.

3. Select HANDLE WIDTH": Introduce the width of the handles "D". Units are displayed in tenths of inches Example: 1.75 inches.

4. Select "SIDE HANDLE CENTER DISTANCE: and introduce the dimension "B" Units are displayed in tenths of inches. Example 39.50.

5. In case of 8 handles options an additional dimension is required. Select "ND HANDLE CENTER DISTANCE" and introduce the dimension "C" Units are displayed in tenths of inches Example 37.25.

6. Select "COMPENSATION SELECTION". You will have 8 different values that can be set according with the type of material.

7. Select "DESCRIPTION" and type the ID number for this type of border.

8. Select "SAVE STYLE" to store all changes

2.7.- Set Up and Operating

It is important that the machine operator and sewing mechanical read this manual and is familiar with all the functions and safety concerns of the unit before operating.

2.7.1.- Power Up Procedure

- Before turning on the power, make sure the machine is clean and free from any debris that will cause problems running the machine.
- Make sure all electric eyes are clean from any dust and debris.
- Check to make sure there is enough oil in both sewing machines.
- Check both waste containers to make sure they are empty.
- Press the green power button located on the main Start / Stop Control Panel assembly.

2.7.2.- Border loading Procedure

- Cut the existing border in the machine approx. 10”-12” from the entrance to the border encoder assembly.
- Open the prefeed rollers using the manual button located on the prefeed assembly and remove the existing material.
- Load the new roll of material onto the border roll support rod and thread the material thru the prefeed guide and roller assembly. **Be sure to adjust the prefeed border guide for different width border material if needed.**
- Thread the new border material thru the border tension rods and pull enough slack thru the prefeed rollers to make sure the border material (prefeed loop) is almost touching the floor (approx 4 feet). **Be sure to adjust the tension assembly border guides for different width border material if needed.**
- Splice the old border material to the new border material using an appropriate border splicing method like staples, Dennison clips, etc. Make sure that the new border material is placed on TOP of the old border material to prevent the splice from hanging on anything while sewing.
- Use the manual sew pedal to sew the slack border material until the splice is completely thru the sew heads and main feed puller assembly**. Be sure to adjust the left sewing head width position and the handle load assembly border guide for different width border material if needed.**
- Close the prefeed rollers.
- Use the manual sew pedal again to sew a few inches until the border material is properly tensioned by the tension roller assembly.

2.7.3.- Setting Up The Machine To Make Borders

If you see a message “Border Slack Warning” on the screen, open the prefeed rollers and pull back the slack border material until the prefeed loop eye is uncovered and then close the rollers.

- On the “READY – NEW ORDER” screen, press the “EDIT NEW ORDER” button.
- On the “EDIT ORDER” screen, press the “Border Style” button.
- Select the style number of the border style that needs to be run. If the style number is not known, press the “Style List” button on the “EDIT ORDER” screen to see a list of all the current styles programmed in the machine.
- After selecting the style needed, press the “ENTER” button on the “SELECT STYLE” screen.
- Select the quantity of borders needed for the order using the “Quantity” button on the “EDIT ORDER” screen and then press the “EXIT” button on the bottom of the screen.
- Press the “START” button on the “READY – NEW ORDER” screen to run the current border order.

When the machine runs out of material it stops, and will display a possibility of two screens:

- If there **IS** enough material to finish the current border, an “Out of Border Material” screen is displayed with a “Finish Border” button to allow the operator to press it and finish making the current border. After this the “Splice on New Roll” screen comes up which tells the operator how to properly splice on a new roll.
- If there **IS NOT** enough material to finish the current border, a different “Out of Border Material” screen is displayed and the prefeed will back up approx. 10”. This allows the operator to pull back the material and splice on a new roll of material at the roll holder or, to save material, splice on a new roll the same way it was described in the Border Loading Procedure.

2.7.4.- Compensation and Set-up Instructions

Step 1: Adjusting the Feed and Prefeed compensation

Make a Queen size border without handles and measure the length. Adjust the Feed compensation value until it measures correctly. Once the border length is correct, run the Prefeed compensation test using a piece of border that has been marked with two lines that are 300" apart and adjust as needed.

Note: The Feed comp must be run before the Prefeed comp.

Step 2: Adjusting the 1st handle location on a 4 handle border

Run a 4 handle Queen size border until the 1st handle is sewn on, then pause the machine. Press the "Manual" button on the Pause page. Use the manual foot pedal to run the border until the handle is thru the knife. Use the "Border Chop Cycle" button to cut the border. Measure the distance from the leading edge to the center of the handle and make sure it is the correct distance. If the distance is not correct, use the **"Knife to Insert"** setting on the technician page to adjust this. Decreasing this number will place the handle farther away from the leading edge.

Step 3: Adjusting the 1st handle location on the 1st 8 handle border

Run an 8 handle Queen size border until the 1st handle is sewn on, then pause the machine. Press the "Manual" button on the Pause page. Use the manual foot pedal to run the border until the handle is thru the knife. Use the "Border Chop Cycle" button to cut the border. Measure the distance from the leading edge to the center of the handle and make sure it is the correct distance. If the distance is not correct, use the **"1st Handle Location (8 Handle)"** setting on the technician page to adjust this. Decreasing this number will place the handle farther away from the leading edge**. (see note at end of instructions)**

Step 4: Adjusting the 1st handle location on the 2nd 8 handle border

Run two 8 handle Queen size borders until the 1st handle on the 2nd border is sewn on, then pause the machine. Press the "Manual" button on the Pause page. Use the manual foot pedal to run the border until the handle is thru the knife. Use the "Border Chop Cycle" button to cut the border. Measure the distance from the leading edge on the 2nd border to the center of the 1st handle and make sure it is the correct distance. If the distance is not correct, use the **"9th Handle Location (8 Handle)"** setting on the technician page to adjust this. Decreasing this number will place the handle closer to the leading edge. **(see note at end of instructions)**

Step 5: Adjusting the marker location

Enable markers on the technician page. Run a border with no handles that has "Marker Enable" and "Center of Foot End" both set to 1. All other marker settings should be set to 0. Fold the border in half to see if the mark has been placed in the middle of the border. Use the "Knife to Marker" setting on the technician page to adjust the location of the mark. Decreasing this number will place a mark farther from the leading edge.

Note: The "Knife to Insert" setting used in step 2 must be adjusted correctly before trying to adjust the 1st and 9th handle locations of an 8 handle border in steps 3 and 4.

2.7.2.- Quality Check sheet & Procedure

Refer to the “Border Handle Quality Check sheet” on next page

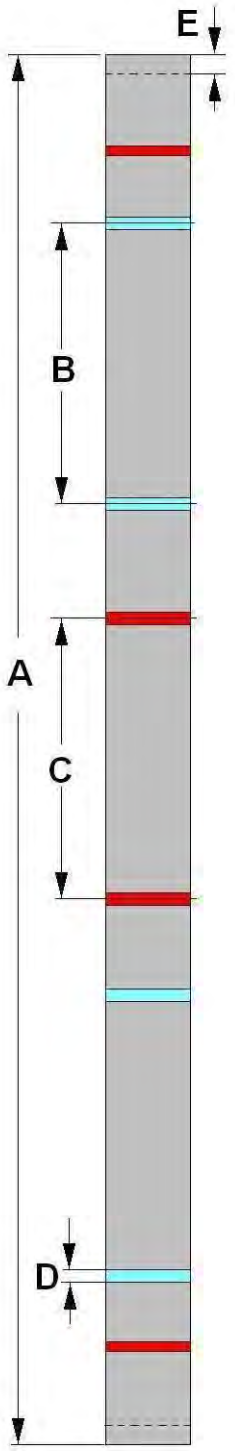

The operator of the 4300 Border Handle Machine must check a border four (4) times each shift (at start-up, 1st break, lunch, 2nd break) and fill out the Border Handle Quality Check sheet according to the following procedure

Insert a "P" for pass or "F" for fail on the chart for each item.
Write in Description and type the ID number for this type of border.
Write in size of border being checked. Twin, Full, etc.
Introduce the dimension “A”: from your border
Introduce the dimension “B”
In case of 8 handles options an additional dimension is required. Select End Handles Center Distance and Introduce the dimension “C”
Check handle spacing. Measure between centers of both pairs of handles. Measurement should be the right ones.
Check horizontal position of handles. Measure from one end of border to center of first handle (A dimension). Measure from other end of border to center of first handle (C dimension). The A and C dimensions should be equal within ½". Measure from the centers of the inside handles (B dimension). The B dimension should be equal to one inch less than two times the A dimension. B = (2xA) - 1. Tolerance is ½".
Check the vertical position of handles. The handle should be centered on the border within 1/8" (D dimension).
Check the border length (A dimension). Stretch the border on the stretch table and check for correct length.
Check the alignment of the unfinished edge with the stitch line (E dimension) on both
ends of each handle. Should be even to 1/16" inside stitch line.
Check for exposed tails (F dimension). Should be no more than 1/16".
Check end stitch margin (G dimension). Should be 1/8" to 3/16" both ends.

	MONDAY				TUESDAY				WEDNESDAY				THURSDAY				FRIDAY			
	Start-Up	1st-Break	Lunch	2nd-Break	Start-Up	1st-Break	Lunch	2nd-Break	Start-Up	1st-Break	Lunch	2nd-Break	Start-Up	1st-Break	Lunch	2nd-Break	Start-Up	1st-Break	Lunch	2nd-Break
Piece #																				
Size (Queen, Twin, Etc.)																				
Handle Spacing 29" ± 1/2"																				
Horizontal Position (A=C,B= (2xA)-1)																				
Vertical Position (D, Centered ± 1/8")																				
Border Length (L, on Stretch Table)																				
Unfinished Edge Alignment (E,0-1/16")																				
Exposed Tail (F, 1/16" Maximum)																				
End Stitch Margin (G, 1/8" - 3/16")																				

2.8.- Maintenance

It is important that the machine operator read this manual and is familiar with all the functions and safety concerns of the unit before operating.

General Safety Instructions

The machine shall be switched off, come to a standstill and be secured so that it cannot be switched on again inadvertently before starting any maintenance work whatsoever. Use proper lockout/tag out procedures to secure the machine against inadvertent startup. Remove any oil, grease, dirt and waste from the machine, particularly from the connections and screws, when starting the maintenance and/or repair work. Do not use any corrosive-cleaning agents. Use lint-free rags. Retighten all screw connections that have to be loosened for the maintenance and repair work. Any safety mechanisms that have to be dismantled for setting-up, maintenance or repair purposes must be refitted and checked immediately after completing the work

2.8.1.- Daily (8 -10 hrs. of operation)

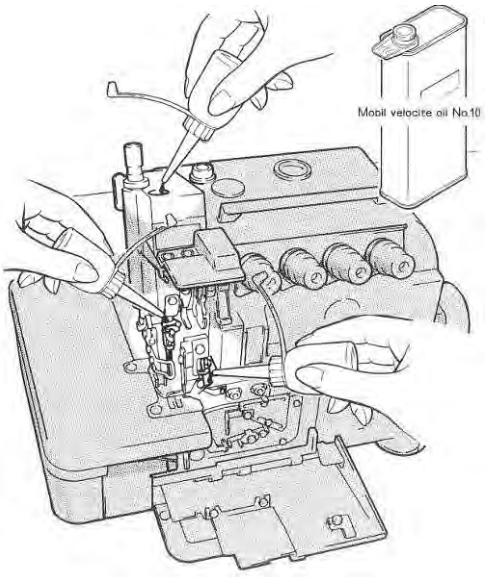

• Follow manufacturer's recommendations and guidelines for operation, maintenance, and lubrication of the sewing head.
• Check for proper oil level and/or flow in the sewing head and other oil filled or lubed equipment, fill as needed. Oil all points as indicated.
• Clean the machine at the end of every shift or as excess materials accumulate.
• Clean lint, waste, etc. from the sewing, looper(s) and needle(s), area as it accumulates, remove or open covers as necessary for access.
• Remove any threads or other material(s) wrapped around or between any moving parts.
• Wipe all photocell lenses with a clean non-abrasive dry cloth.
• Use a soft cloth for cleaning to clean all reflective tapes. Do not use chemicals or abrasives to clean it. Avoid any contact with oils and liquids. Do not touch the tape with bare fingers. If tape is dirty or opaque, the eye may not function correctly.
• Open or remove doors and/or covers and inspect belt(s) for debris or wear and clean or replace as necessary.
• Monitor the air pressure filter/regulator and empty as necessary.
• Investigate and report any unusual noises to the proper personnel.

3.-TECHNICAL MANUAL

All maintenance should be performed by a qualified service technician.

3.1.- Mechanical

3.1.1- Sewing Head Adjustments

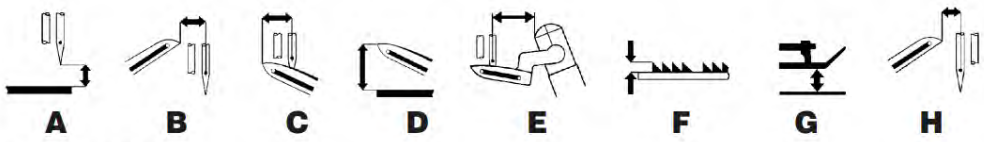

Standard needle : DC×27 (mm)

Model	A	B	C	D	E	F	G	H
EX3216 -04	11.9	4.2	4.4～4.7	12.0	14.5	1.1	7.0	1.7

1.- Adjusting the needle height

1. First, check to see if the needle is inserted to the proper depth.
2. Turn the hand wheel until the needle reaches the highest position of its stroke.
3. Adjust vertical distance (a) between the point of the needle and the top surface of the needle plate. To make this adjustment, loosen screw (1) with a supplied T wrench and move needle holder guide (2) up or down as required.

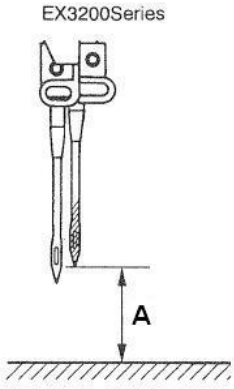

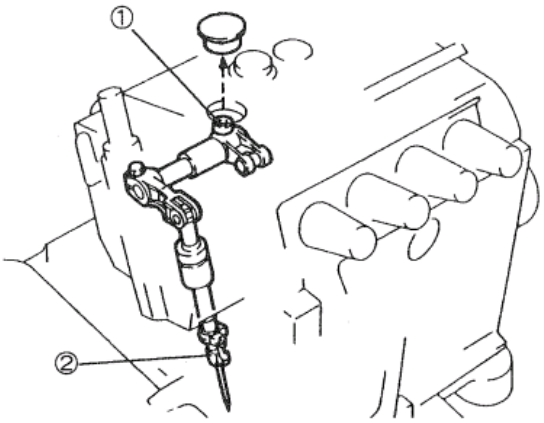

2.- Adjusting the lower lopper

Lower looper setting distance

When the lower looper is at the farthest position to the left, adjust setting distance (B) between the center line of the overlock needle and the point of the lower according to the machine type. To make this adjustment, loosen screw (5) and move looper holder (7) left or right as required.

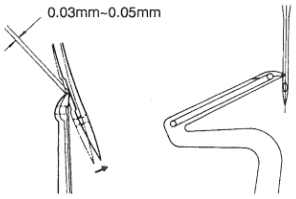

Lower looper front-to-back adjustment

When the point of the lower looper has reached the center line of the needle from the left, the needle should be deflected 0-0.03mm toward the operator by the lower looper.

To make this adjustment, loosen (5) and move looper holder (7) front or back as required by turning adjusting screw (5).

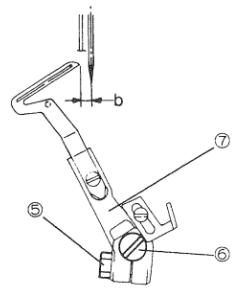

3.- Adjusting the upper lopper

1. When the upper looper is at the farthest position to the left, adjust distance (a) between the center line of the overlock needle and the point of the upper looper. After this adjustment, tighten screw (2) temporarily.

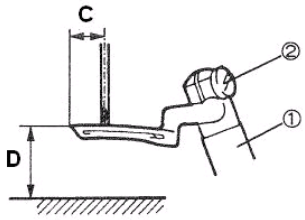

2. When the point of the upper looper and the back of the lower looper are going to cross, set distance © at approximately 0.5mm and distance (d) at approximately 0.2mm. Then tighten screw (2).

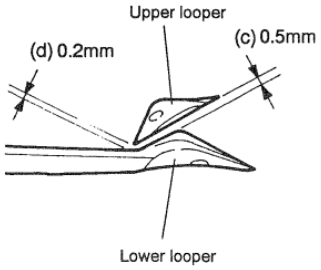

3. When the upper looper is at the farthest position to the left, adjust distance (b) between the center line of the overlock needle and the point of the upper looper. The setting distance and positioning of the upper looper depend on the machine type. Check the name plate for the type of your machine and then select the correct upper looper setting distance and positioning of the upper looper

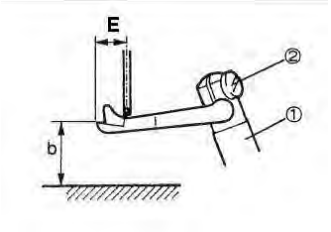

1

4.- Adjusting the double chain stitch looper

1.- Adjust clearance (a) between the center line of the double chain stitch needle and the point of the looper correctly.

1. Turn the hand wheel until the double chain stitch looper is at its farthest position to the left.
2. Loosen screw (1) and move looper holder (3) left or right as required.
3. Tighten screw (1) temporarily.

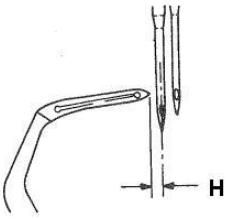

2.- Adjusting the clearance between the looper and the needle

1. Move the double chain stitch looper from the extreme left end of its travel to the center line of the double chain stitch needle by turning the hand wheel.
2. Loosen (1) and move looper holder (3) front or back as required by turning front- to-back adjusting screw (2).
3. Tighten screw (1).

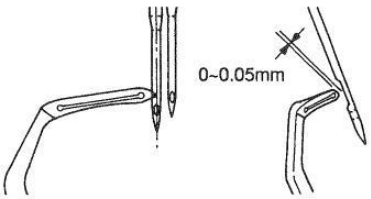

3.- Adjusting the amount of the front-to-back movement of the double chain stitch looper

Remove cover (4), loosen screw (5) and turn hinge pin (6) as required.
To decrease the amount, turn in the direction of (-).
To increase the amount, turn in the direction of (+).
Adjust the amount when changing the double chain stitch needle.
When changing to the needle of larger number, turn hinge pin (6) in the direction of (+).
When changing to the needle of smaller number, turn hinge pin (6) in the direction of (-).

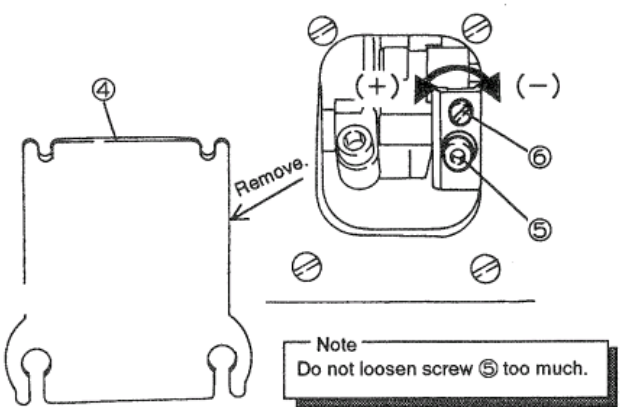

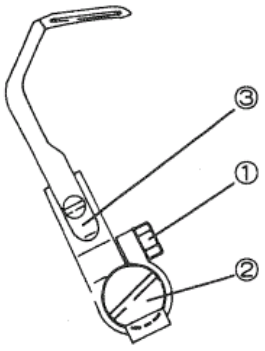

5.- Adjusting the needle guards

1. Adjusting the overlock needle guards

•When the point of the lower looper has reached the center line of the overlock needle from the left, check to see if the needle is deflected 0-0.03mm toward the operator by the lower looper. (Refer to page 38 "ADJUSTING THE LOWER LOOPER" for this adjustment.)

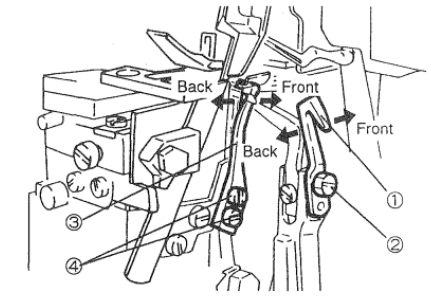

•To adjust rear needle guard (1)

In the above condition, adjust rear needle guard (1) so that the needle is deflected by rear needle guard (1) and clearance (a) is 0-0.05mm. To make this adjustment, loosen screw (2) and move rear needle guard (1) front or back as required.

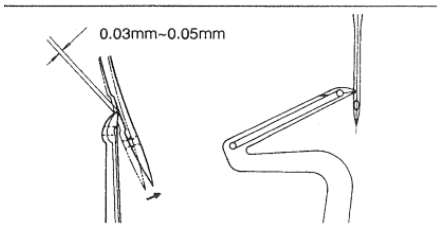

•To adjust front needle guard (3)

When the point of the lower looper is at the center line of the needle and the needle is deflected most by rear needle guard (1), clearance (b) between the needle and front needle guard (3) should be 0.1-0.2mm.

To make this adjustment, loosen screws (4) and front move needle guard (3) front or back as required.

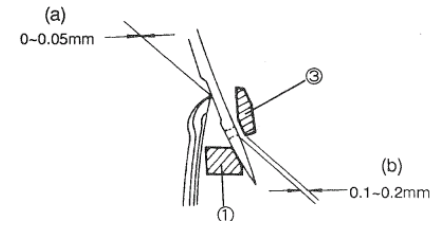

2. Adjusting the double chain stitch needle guards

•To adjust rear needle guard (5)

When the double chain stitch needle is at the lowest position of its stroke, clearance © between the double chain stitch needle and rear needle guard (5)should be 0mm-0.05mm.

To make this adjustment, loosen screws (5) and move rear needle guard (5) front Or back as required.

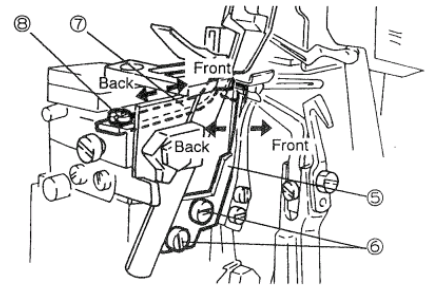

•To adjust front needle guard (7)

Adjust clearance (d) between the double chain stitch front needle and needle guard (7) to 0.05mm-0.1mm.

To make this adjustment, loosen screw (8) and move front needle guard (7) front Or back as required.

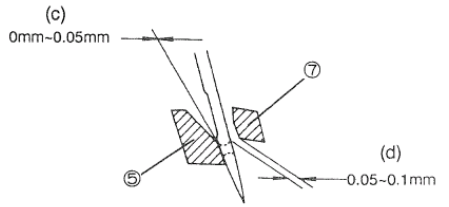

3.1.2- Adjusting Cutting Blades

A clean cut of the border will depend on the type of material, the sharpening of the blade and the tension of between the cutting blades. In order to adjust the tension between blades please follow these procedure.

Note: The less tension you have between blades the longer they will last.

The Guillotine Blades

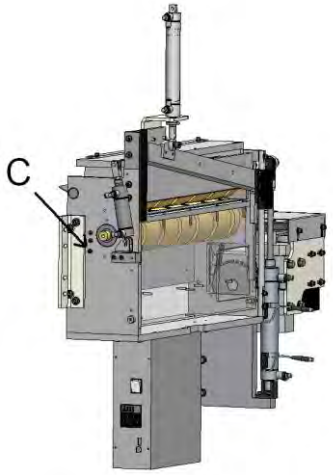

1. Release Screw “C”

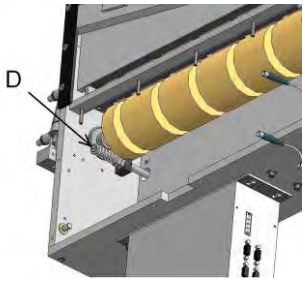

2. Adjust Screw “D” to control the tension between both cutting Blades.

3. You will be able to have access to the screw through holes “A” or “B”

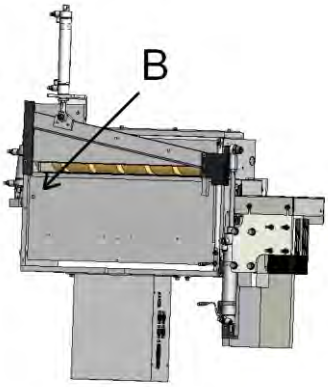

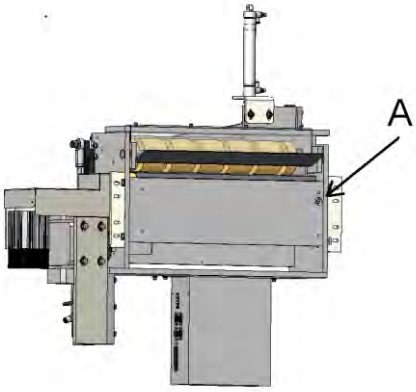

4. Select on Touch Screen the cutting function and adjust until you get a clean cut. If necessary replace the blades (1366113 TOP BLADE,18"CAPACITY + 32004002A BLADE,BOTTOM,18").

5. Re-tight Screw “C”

Adjusting the Handle Knife Blade

1. Make sure air is off to the system.

2. Remove the four standard hex head screws and remove feed roller assembly.

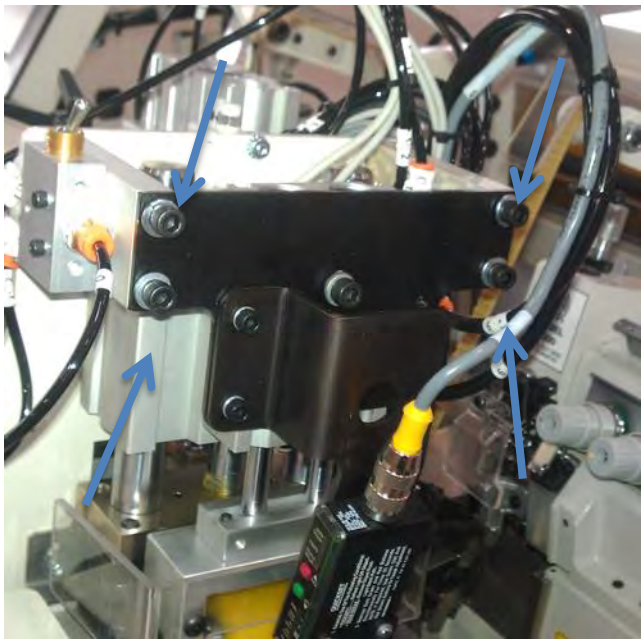

3. Loosen the two metric screws only enough to allow adjusting of the blade.

4. The silver and black plate need to be flush. Turn of the adjustment screw very slightly clockwise to adjust the blade.

5. Each time you adjust the set screw test the cutting blade by manually pushing down and cutting a piece of border material. You should be able to raise the cutter fairly easy. Depending on how clean the cut is you may need to adjust again. If the adjustment is all the way in and your still getting a rough cut, it's time to sharpen the blade.

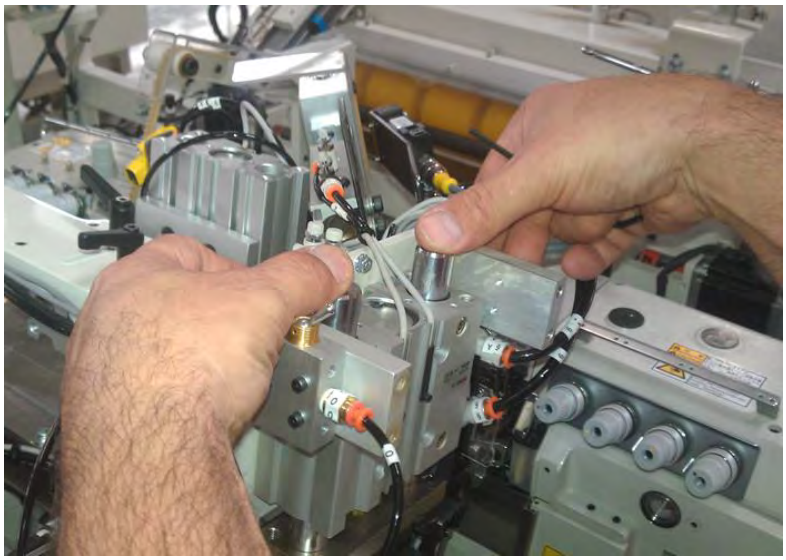

6. Remember to tighten the two blade metric screws and install the knife handle feed roller.

3.2.- Pneumatic

3.2.1.- Main Air pressure regulator AA198-5110

The regulator assembly is located behind the table. The regulator is for the main air pressure, this is normally set to 70 to 80 psi.

The purpose of the regulator is to keep the operating pressure of the system (secondary pressure) virtually constant regardless of fluctuations in the line pressure (primary pressure) and the air consumption.

Clean air in your compressed air system is essential for the safe and efficient operation of this reliable power source.: Harmful contaminants like oil, dust, dirt, rust, and water-alone or in combination-can attack your system and clog sensitive pneumatic instruments. It can also reduce the efficiency of air-operated tools. Wear out seals and erode system components. Increase maintenance and repair costs. Contribute to product rejects, production downtime-even complete plant shutdown.

3.2.2.- Air pressure module. 4080-200

It is the Sensor responsible for the detection of the secondary air pressure, if it does not reach the pre-adjusted value.

For more details of connections see pneumatic diagram located 0n page **Error! Bookmark not defined.**

3.3.- Electrical

All maintenance should be performed by a qualified service technician.

3.3.1.- Main Power witch

The main power On/Off switch is on the back of the machine. It is used to turn the power on to the whole machine. This machine requires 220V Single Phase 15 Amps. If you have problems with the power not coming on when the On button is pressed you may check this switch by doing the following.

ATTENTION. Make sure that the machine is unplugged before proceeding and that all lock out/tag out procedures have been correctly followed (See to Lockout tag out procedure)

- Check the circuit breakers if any of the barkers had gotten overloaded at some point.
- Replace the cover, plug the machine in, and try turning the machine back on.
- If the contact still trips the overload, then there is a problem either with the wiring or the contactor.
- Use the wiring diagram for your machine in the parts manual to check the voltages.
- Try replacing the circuit breaker.

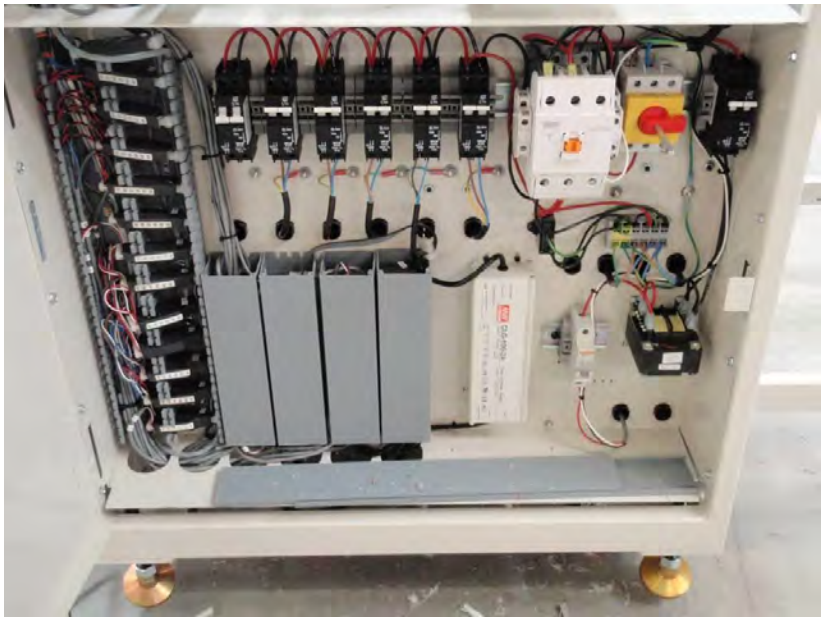

3.3.2.- Sensors

1.- Photoelectric Eyes FFSM312VQ

There are 5 Photoelectric sensors mounted on the machine.

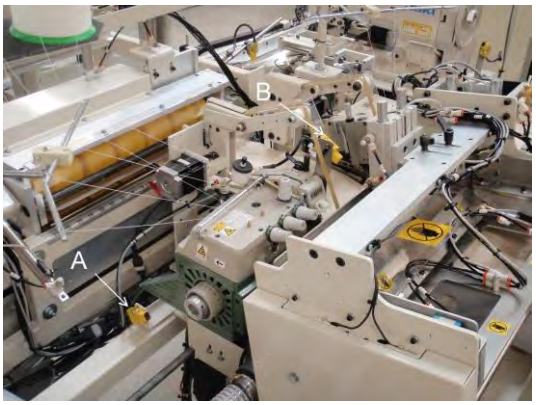

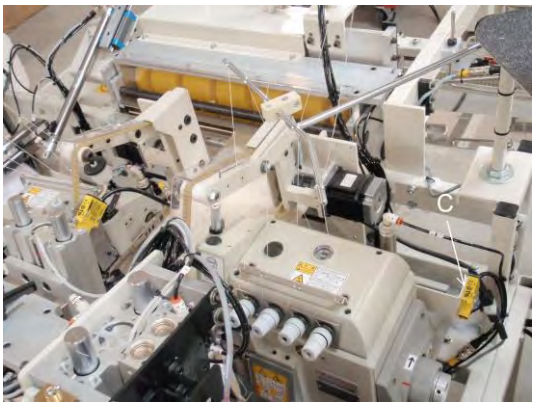

"A" Left head Hand wheel eye.

Reads a piece of reflective tape located on the pulley disks The Hand wheel eye is responsible for reporting to the Efka motor that the sewing head is sewing at the set RPM, stitch counting for all counters, and for needle position when stopping

"B" Handle eye.

Responsibility to read the presence of the handle on the handle tray

"C" Right Sewing Head Hand wheel eye.

Reads a piece of reflective tape located on the pulley disks The Hand wheel eye is responsible for reporting to the Efka motor that the sewing head is sewing at the set RPM, stitch counting for all counters, and for needle position when stopping

"D" Roll Feeding eye.

Responsibility is to read the presence of material on the border pre-feeder.

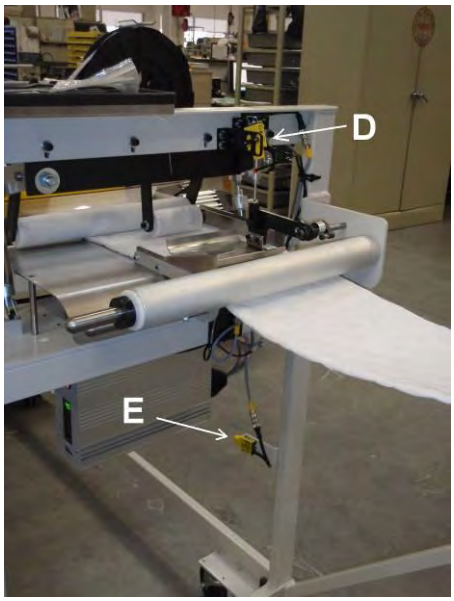

"E" Feeding Loop eye.

Detect the formation of the slack between the pre-feeding and the sewing machine

Eye Sensor Adjustment

1. Remove the clear plastic cover from the end of the sensor. There are two adjusting screws under the cover. One is labeled “GAIN” and is used to set the sensitivity of the sensor. The other screw is labeled “DO & LO” and should always be fully clockwise.
2. With the end of the sensor pointing at the center of the reflective tape, turn the “GAIN” screw counter-clockwise until the red LED indicator is off
3. Then turn the “GAIN” screw clockwise until the LED indicator comes on.
4. Then turn the “GAIN” screw one full turn clockwise. The LED indicator should be blinking slowly.
5. Cover the eye so that the sensor cannot see the reflective tape and the LED should go off.

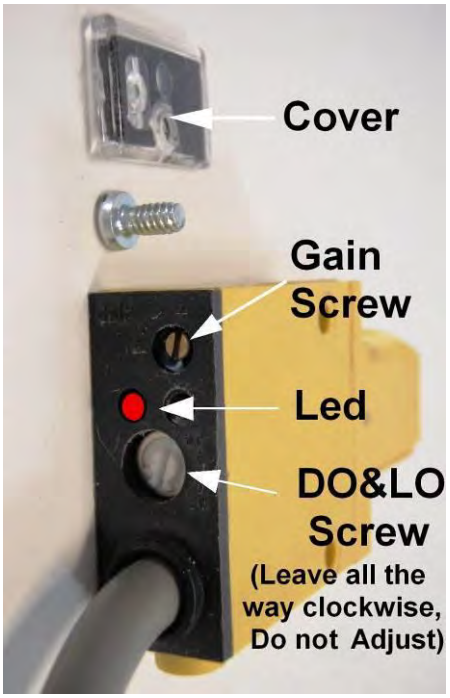

Reflective Tape Maintenance

Use a soft cloth for cleaning. Do not use chemicals or abrasives to clean it. Avoid any contact with oils and liquids. Do not touch the tape with bare fingers. If tape is dirty or opaque, the eye may not function correctly.

2.- Flaw Mark Eye FFSE3WLC

There are 2 flaw mark sensor on the machine

NOTE: It is looking for a black mark indicating a flaw, which has been previously marked during the prior process.

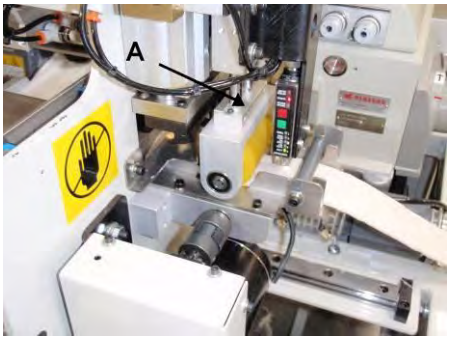

1.- For the detection of any flaw or the handles “A”

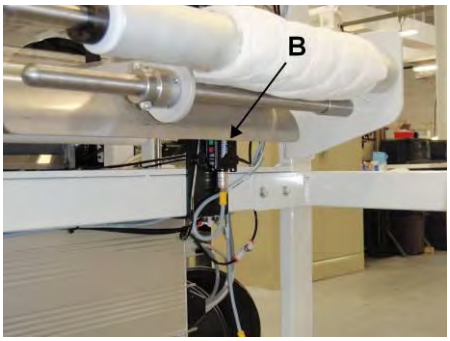

2.- For the detection of any flaw on the border. “B”

Border Flaw Mark Adjustment

1. First mark a small piece of border or Handle with the definite black line. (Like the border or a handle had been marked for a flaw).

2. Place the marked piece of the border on top of the plate above the flaw mark sensor.

3. Align a white unmarked section of the border directly over the flaw mark sensor.

4. Press and holds the RED and GREEN buttons simultaneously for 3 seconds. This will cause the sensor to automatically set itself.

5. Test the adjustment by moving the marked piece of border back and forth above. The LED 5 should light when viewing the white border and should decrease to LED 1 or no LED when viewing the black line. Use the GREEN up arrow and the RED down Arrow buttons to adjust sensor.

NOTE: Occasionally thick borders with heavy quilting will cause the sensor to report a flaw by mistake. If this becomes a problem, perform the additional adjustments below.

1. Place the marked piece of border on top of the plate above the flaw mark Sensor.

2. Align the black line on the border directly over the flaw mark sensor.

3. Is any of the intensity LEDs lit? If so proceed to step 4, if not then press the GREEN up arrow button repeatedly until you see one of the intensity LEDs light.

4. Now that you have one of the intensity LEDs lit, press RED button 3 more times. Adjustment of the sensor is now complete. The sensor should now ignore quilting and look only for definite black Line

3.- Air Cylinder Sensors

There are several sensors locate on the cylinders.

A: Hall Switch. AAEHSKQ
Used on following cylinders:
Border knife open & close.
Handle clamp up

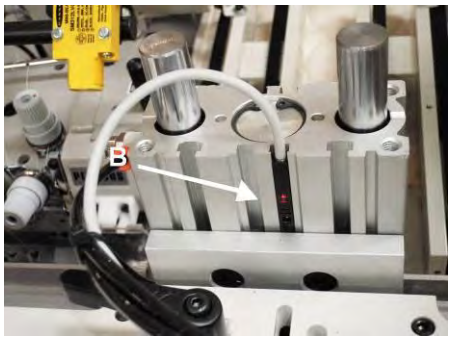

B: Hall Switch.AAEDY59A-3M
Used on following cylinders:
Handle knife open & close
Handle guide vertical up
Handle guide horizontal out

4.- Proximity Switch 1278-7055A

Used on :
Border Splice Switch
Handle load home
Handle load out

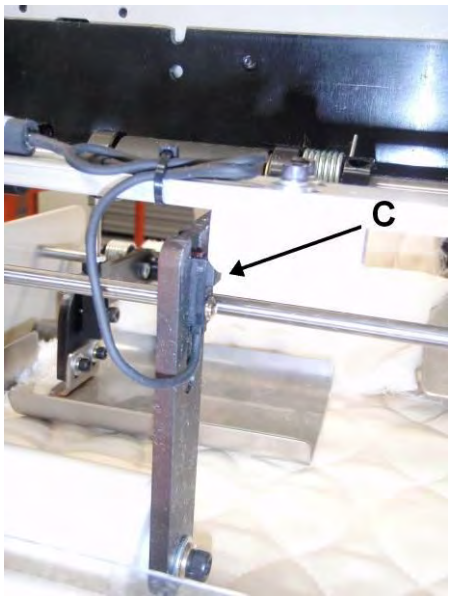

3.4.- Stepping Motor Control Box

There are 3 stepping motor box located inside the machine. CONVEYORS, HANDLE LOAD, HANDLE FEED

The back of the boxes has an on/off switch, fuse, and cables. Leave the on/off switch on all the time. When working on the box always disconnect the power cord before servicing.

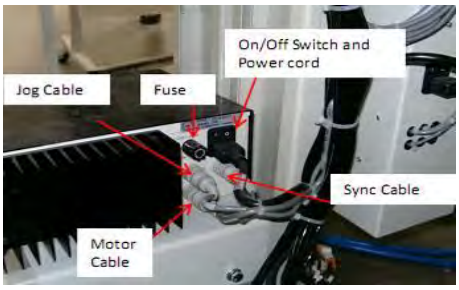

3.4.1.- Left Belt Feed AP-28-600CC

The box has three thumbwheels on the front which are set to synchronize the feeding of the material
PRE-SET THUMBWHEEL SETTING: 200

3.4.2.- Right Belt Feed AP-28-600CC

The box has three thumbwheels on the front which are set to synchronize the feeding of the material
PRE-SET THUMBWHEEL SETTING: 200

3.4.3.- Handle Feed AP-28-800W

The box has three thumbwheels on the front which are set to synchronize the feeding of the handle to the sewing head. The number is proportional to the loading speed not affected by sewing speed. It is set based on the thickness and type of material being sewn. To adjust unlock the dial and turn counter clockwise to reduce the speed turn clockwise to increase.
PRE-SET THUMBWHEEL SETTING: 200
JOG POT SETTING: 750

3.4.4.- Handle Feed AP-28-800W

Similar to the HANDLE LOAD control box.
The three thumbwheels dial is not used on this control box
PRE-SET THUMBWHEEL SETTING: 000
JOG POT SETTING: 950

3.4.5.- Mini Switch (SW1)

In case of replacement of the boxes please review following adjustments.

- **Switch # 1:** Control the rotations of the motor CW: Clock wise rotation. CCW: Counter close wise
- **Switch 2:** No function
- **Switch 3:** No function
- **Switch 4:** For 1 Amps motors**.**
- **Switch 5:** For 2 Amps Motors.
- **Switch 6:** For 2.5 Amps Motors.
- **Switch 7:** For 3 Amps Motors.
- **Switch 8:** For 3.5 Amps Motors

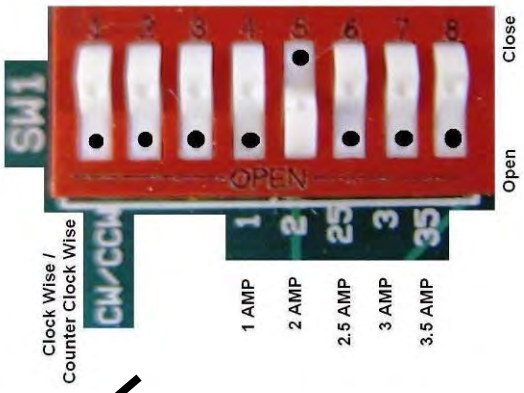

Stepper Box Settings.

CONVEYORS
MOTOR 1 (L.CONV) 2 AMP setting and CCW rotation
MOTOR 2 (R.CONV) 2 AMP setting and CW rotation

HANDLE FEED
4 AMP setting and CW rotation

HANDLE LOAD A
2 AMP setting and CW rotation

3.5.- Efka Motor

3.5.1.- Programming the Code Number

NOTE: The parameter numbers in the illustrations below serve as examples and may not be available in all program versions. In this case, the display shows the next higher parameter number. See List of Parameters. If you have and screen with 4 digits your access code will be 3112 instead of 311

1. Press the **P** key and turn power on

2. Press the >> key (1st digit blinks)

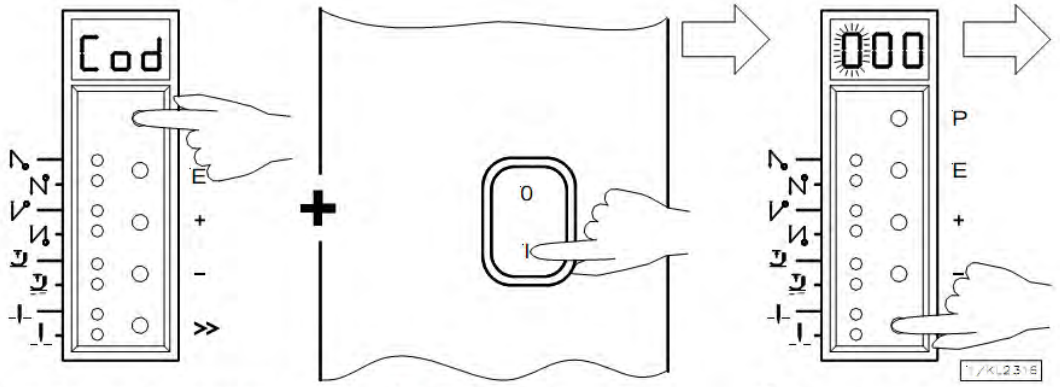

3. Press the + or – key to select the 1st digit
Technician level ➔ Code no. 190
Supplier level ➔ Code no. 311

4. Press the >> key (2nd digit blinks)

5. Press the + or – key to select the 2nd digit

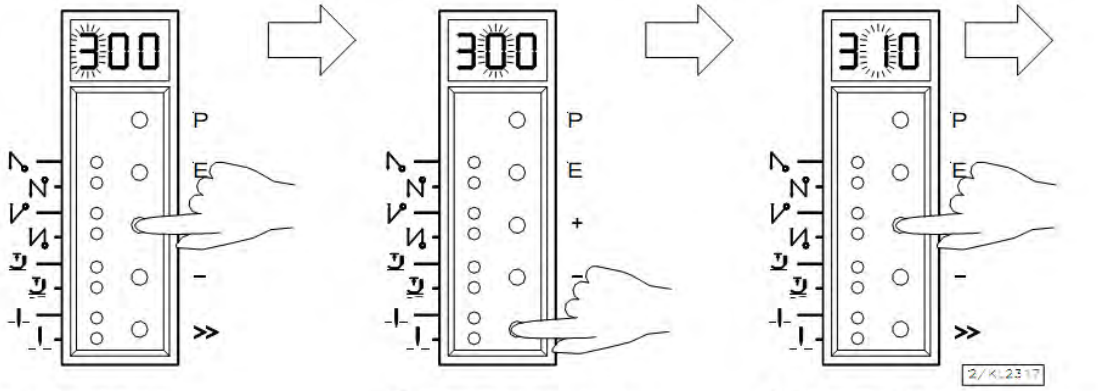

6. Press the >> key (3rd digit blinks)

7. Press the + or – key to select the 3rd digit

8. Press the **E** key; the parameter number is displayed, which is indicated by points between the digits.

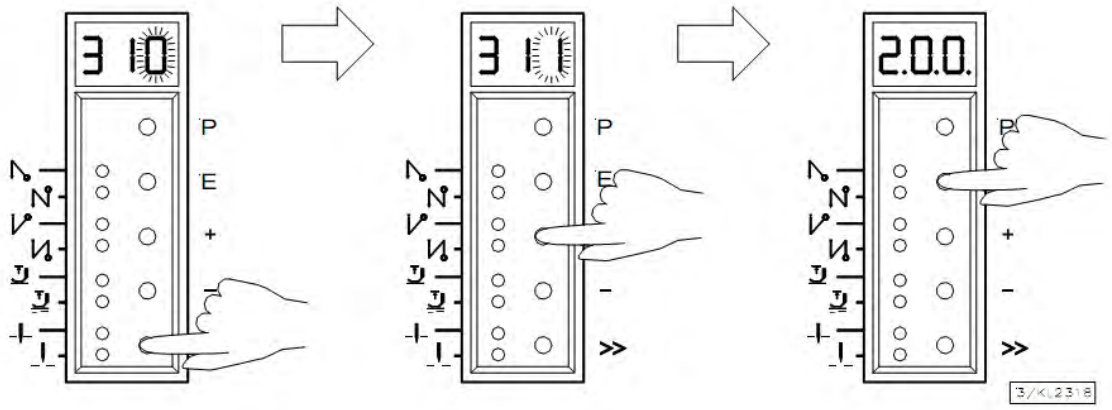

Parameter Selection

Direct Selection

1. After code number input at the programming level

2. Press the >> key (1st digit blinks)

3. Press the + or – key to select the 1st digit

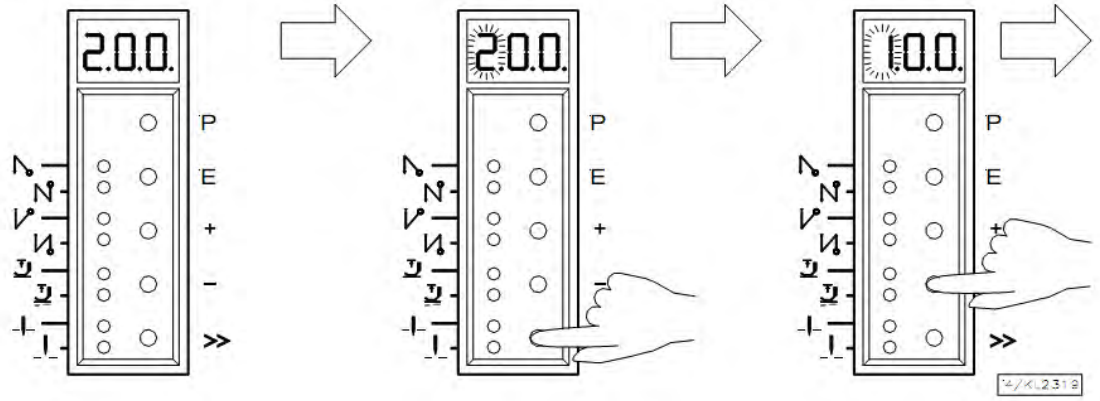

4. Press the >> key (2nd digit blinks)

5. Press the + or – key to select the 2nd digit

6. Press the >> key (3rd digit blinks)

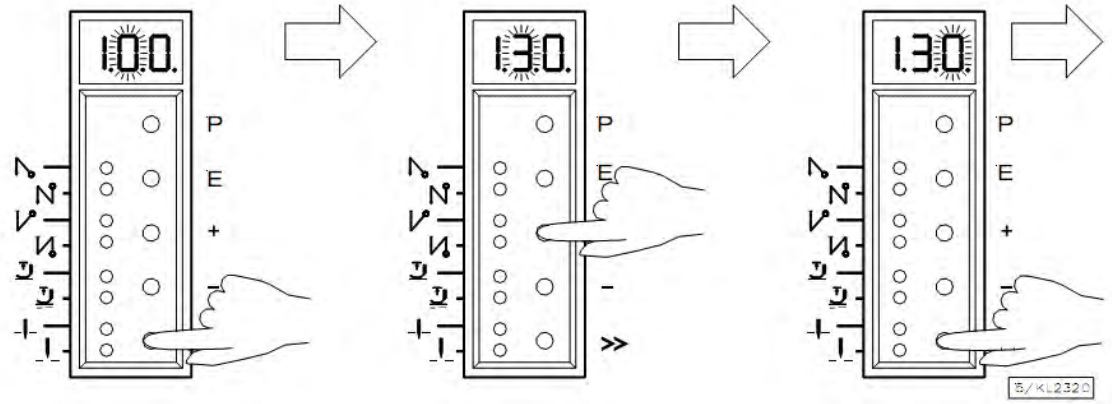

7. Press the + or – key to select the 3rd digit

8. Press the **E** key; the parameter value is displayed. There are no points between the digits.

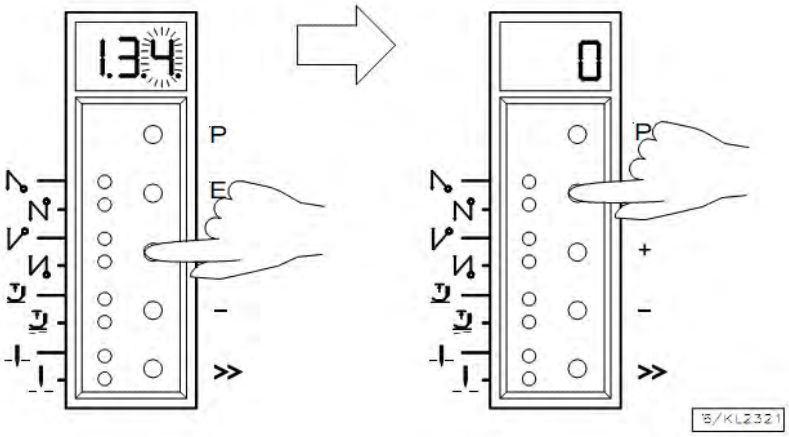

Changing Parameter values

1. Display after parameter value selection

2. Change the parameter value by pressing the + or - key

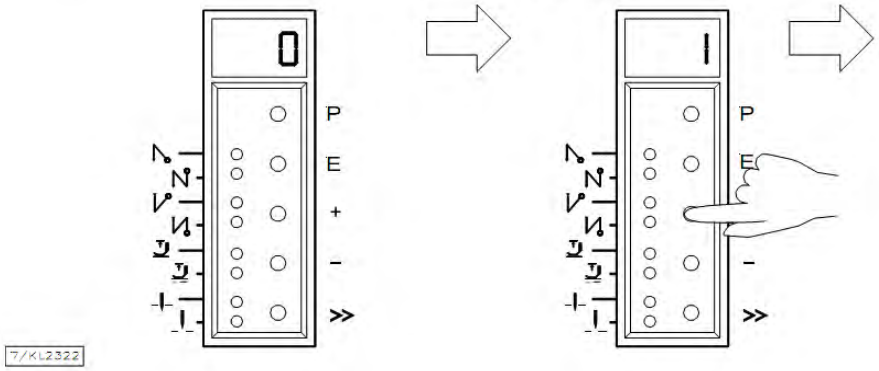

Option 1

Press the **E** key. The **next** parameter number is displayed.

Press the **P** key. Exit programming. The changed parameter values will be saved when you start sewing again!

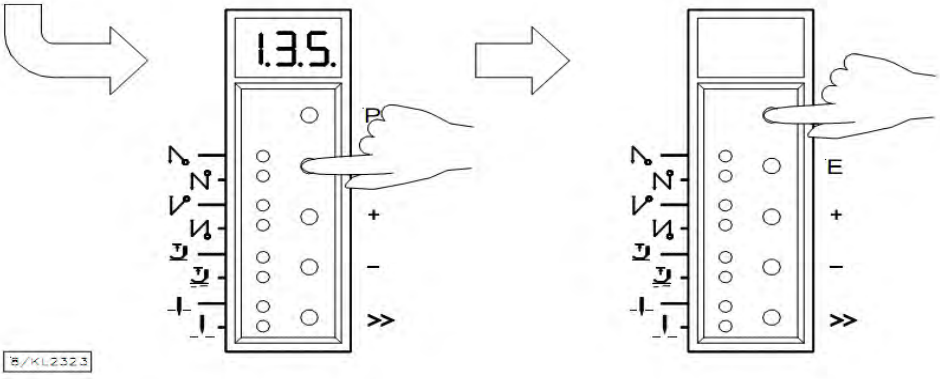

Option 2

Press the **P** key. The **same** parameter number is displayed.

Press the **P** key. Exit programming. The changed parameter values will be saved when you start sewing again!

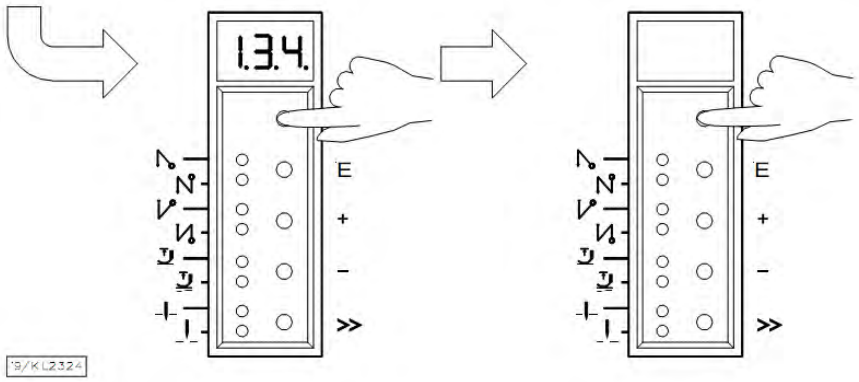

'9/KL2324

Parameter Selection with the +/- Keys

1. After code number input at the programming level

2. Select the next parameter by pressing the + key

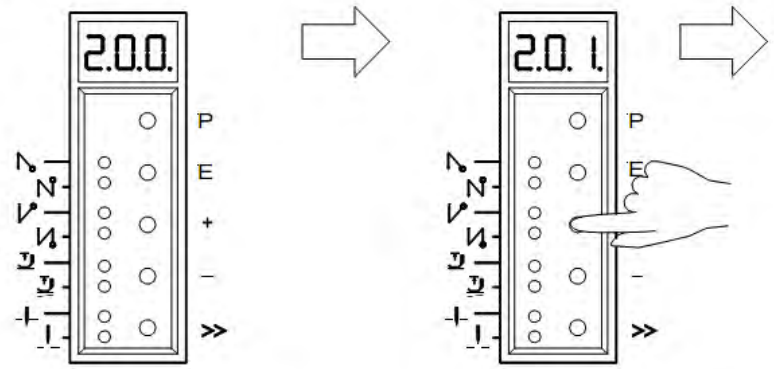

'10/KL2325

3. Select the previous parameter by pressing the - key

4. After pressing the **E** key, the parameter value is displayed

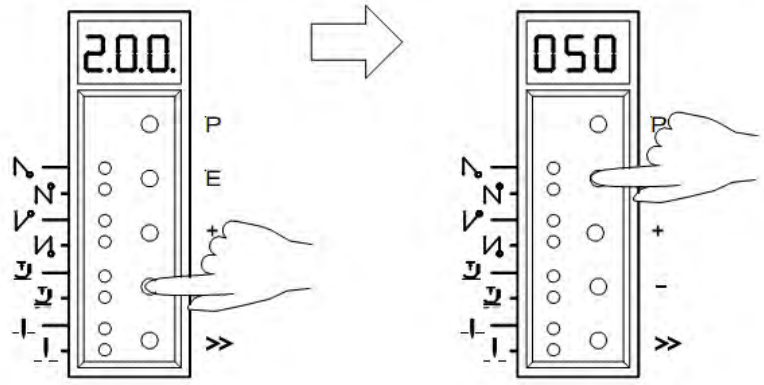

'11/KL2326

These values are saved when you start sewing. They remain in effect even after turning the machine off! Using parameter 401 is another possibility for immediate storage without having to start sewing.

3.5.2.- To Perform Master Reset of Parameters:

1. Power on holding down the "P" button till "COD" is displayed.
2. Press ">>" once and enter the number "591" or 5913 for 4 digits screens
3. Press "E" twice and "093" is displayed.
4. Press "+" once, "094" is displayed.
5. Press "P" to exit programming mode with all default values.

3.5.3.- Parameter List

The parameters below are pre-programmed from factory before the unit is shipped
Before Programming, Perform a Master Reset of Parameters.

1.- Right sewing head

PARAMETER	RANGE	VALUE	DESCRIPTION
290		0	Mode of operation. MUST SET THIS PARAMETER FIRST!
026	0-5	0	EB301 Treadle Mode
111	200-9900 rpm	500	Maximum speed when "129" is 0, 1, or 2.
119	1-3	1	Linear acceleration
161	0-1	0=CW	Motor rotation
270	0-5	1	External hand wheel sensor configuration.
272	020-255	100	Drive ratio between motor pulley and hand wheel pulley. If hand wheel pulley is smaller than motor pulley, increase this value to slow down sewing head until measured speed matches speed set with parameter 111.
436	0-1	0	Use code "5913". This disables an input that was causing box to reset itself.
401	0-1	1	Immediate save of parameters. MUST BE DONE LAST!!!

Front panel
LED's:

LED 1: Off
LED 2: Off
LED 3: Off
LED 4: Off
LED 5: Off
LED 6: Off
LED 7: Off, Stop at needle down.
LED 8: On, Stop at needle up.

2.- Left Sewing Head

PARAMETER	RANGE	VALUE	DESCRIPTION
290		0	Mode of operation. MUST SET THIS PARAMETER FIRST!
026	0-5	0	EB301 Treadle Mode
111	200-9900 rpm	500	Maximum speed when "129" is 0, 1, or 2.
119	1-3	1	Linear acceleration
161	0-1	1=ccw	Motor rotation
270	0-5	1	External hand wheel sensor configuration.
272	020-255	100	Drive ratio between motor pulley and hand wheel pulley. If hand wheel pulley is smaller than motor pulley, increase this value to slow down sewing head until measured speed matches speed set with parameter 111.
436	0-1	0	Use code "5913". This disables an input that was causing box to reset itself.
401	0-1	1	Immediate save of parameters. MUST BE DONE LAST!!!

Front panel
LED's:

LED 1: Off
LED 2: Off
LED 3: Off
LED 4: Off
LED 5: Off
LED 6: Off
LED 7: Off, Stop at needle down.
LED 8: On, Stop at needle up.

3.- Pre-Feed

PARAMETER	RANGE	VALUE	DESCRIPTION
290		0	Mode of operation. MUST SET THIS PARAMETER FIRST!
026	0-5	0	EB301 Treadle Mode
110	70-390	115	Positioning speed
111	0-999	046	Maximum speed when "129" is 0, 1, or 2.
119	1-3	1	Linear acceleration
153	0-50	0	Braking power at standstill
161	0-1	1-CCW	Motor rotation
207	1-55	1	Braking
220	1-55	1	Acceleration
240	0-56	55	Enable reverse run of motor with input 1
270	0-5	5	No hand wheel sensor
272	020-255	100	Drive ratio between motor pulley and hand wheel pulley. If hand wheel pulley is smaller than motor pulley, increase this value to slow down sewing head until measured speed matches speed set with parameter 111.
436	0-1	0	Use code "5913". This disables an input that was causing box to reset itself.
401	0-1	1	Immediate save of parameters. MUST BE DONE LAST!!!!

Front panel
LED's:

LED 1: Off
LED 2: Off
LED 3: Off
LED 4: Off
LED 5: Off
LED 6: Off
LED 7: Off, Stop at needle down.
LED 8: On, Stop at needle up

4.- Puller

NOTE: Program and run the Right Sew Head before programming the Puller.
Use the "5131E" Efka program, or "5131I" and above for the puller.

PARAMETER	RANGE	VALUE	DESCRIPTION
290	0-26	0	Mode of operation. MUST SET THIS PARAMETER FIRST!!!
026	0-1	0	EB301 treadle mode
111	0-999	5000	Maximum speed when "129" is 0, 1, or 2
119	1-3	1	Linear acceleration
153	0-50	35	Braking power at standstill
161	0-1	0-CW	Motor rotation
220	1-55	5	Acceleration
270	0-5	5	No handwheel sensor
272	0015-9999	2500	Drive ratio between motor pulley and hand wheel pulley. If hand wheel pulley is smaller than motor pulley, increase this value to slow down sewing head until measured speed matches speed set with parameter 111.
482	0-3	3	Master/Slave Mode, 0=Off, 1=Master, 2=Slave, 3=Slave w/ Ratio
483	0-1	1	Motor rotation compared to Master, 0=same, 1=opposite
436	0-1	0	Use code "5913". This disables an input that was causing box to reset itself.
401	0-1	1	Immediate save of parameters. MUST BE DONE LAST!!!
290	0-26	0	Mode of operation. MUST SET THIS PARAMETER FIRST!!!

3.6.- Serial Bus

3.6.1.- Technical Menus

1.- Advance Settings

The ADVANCED SETTINGS from the ADVANCE FUNCTION menu accesses the advanced machine settings and functions not normally accessible by the operator. After power on or a reset, a pass code must be entered to access these screens. The two ADVANCED SETUP pages contain all the adjustable counters and timers that control the machine. The number in the upper left corner of each button represents the counter/timer number and is used on the SHOW ALL SETTINGS page matrix.

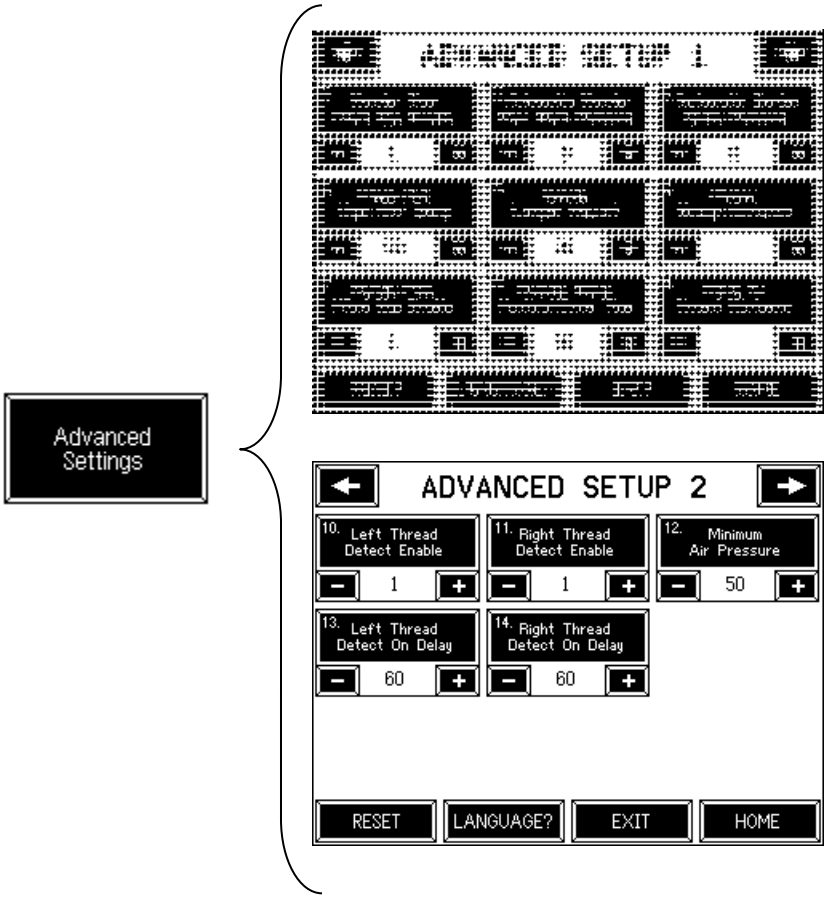

2.- Advance Manual.

The four ADVANCED MANUAL pages contain buttons, shown as dark "3" dimensional rectangles, and input indicators, shown as light rectangles. The buttons are used to manually turn on or off individual output functions of the machine for testing and troubleshooting. The input indicators show if the computer can "see" the individual inputs for testing and troubleshooting.

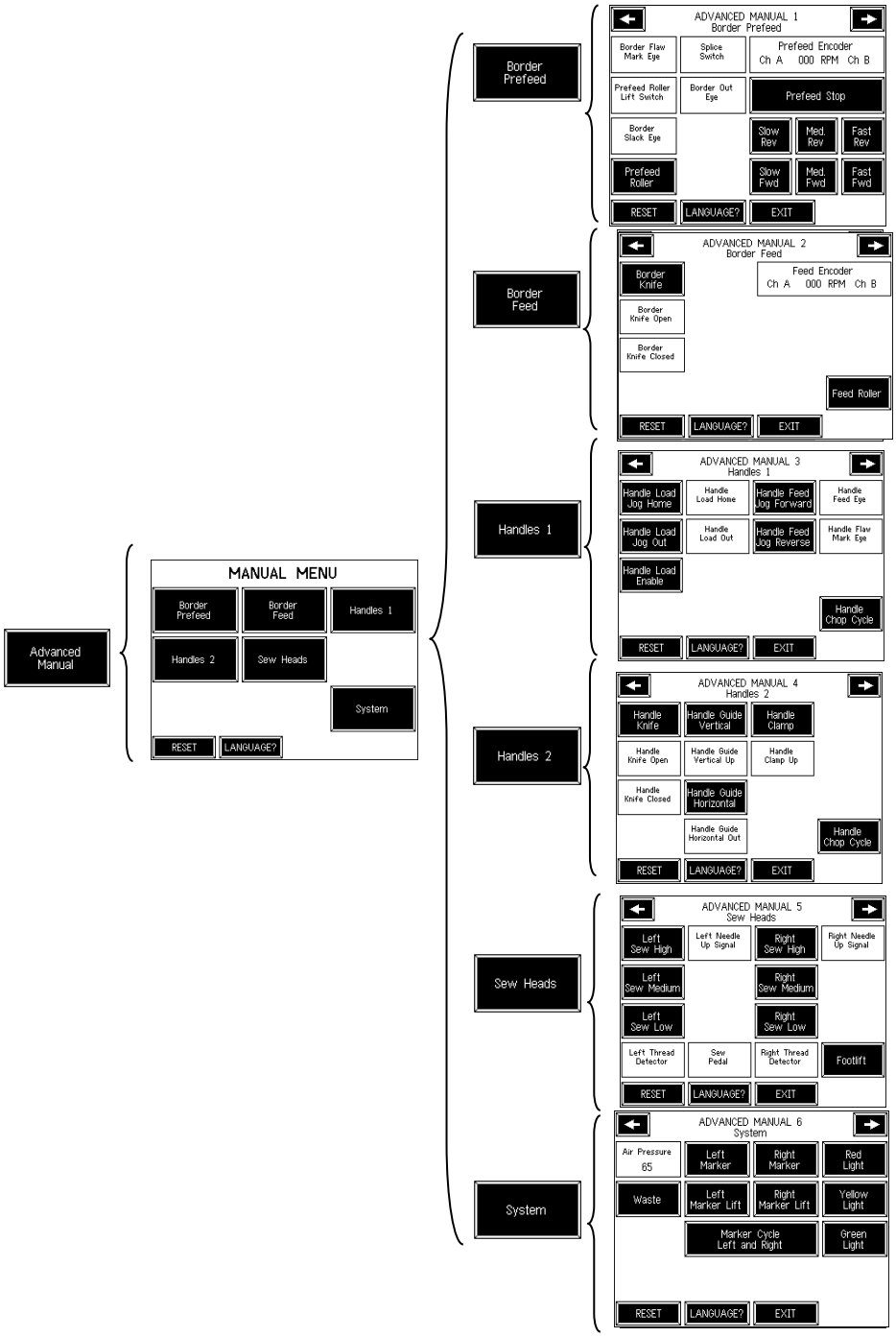

3.6.2.- Calibrating the Touch Screen

If you are having troubles locating the right place to get access to the function by touching the screen a screen calibration may be required.
Proceed as following:

1. Place one finger on the screen and hold it there while pushing the Green ON button.

2. When the screen turns light, remove your finger and the screen will display two lines, one vertical and one horizontal, intersecting at the top left corner. The text "Touch at the crossed lines to calibrate display." should appear in various languages. In older machines, there will be no text.

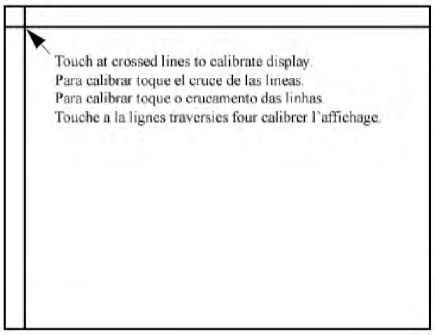

3. Using a small pointing device that will not puncture or damage the screen (such as a pencil eraser), touch the screen where the two lines intersect. Do this with as much accuracy as possible.

4. When the screen is touched, the display will change to two lines intersecting at the lower right of the screen.

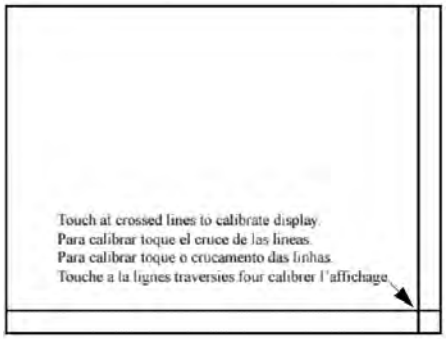

5. Repeat step 4 where these lines intersect.

NOTE: The implementation of step 3 and step 4 directly affects the validity of all the buttons in the entire program. It is very important to be accurate.

Press the language button of your choice.

Press the RESET button at the lower left corner of the screen. See figure 5.

3.6.3.- Installation of a new Touch Screen.

To program a new screen, they must follow these directions.

1. Install new screen and turn power on
2. When screen displays "Fatal Error Message" press continue
3. Enter Mechanic Security Code
4. After reading the "Warning Message" press continue again
5. Screen will begin to process the up-loading of existing program. This will take 60 - 90 seconds
6. After reading the "Last Warning Message" press continue again.
7. Screen will begin to process information again for 15 - 30 seconds
8. Reset routine will follow. Special note: Machine assemblies will reset or move to home positions
9. Screen will return to the Main Display and is ready to run.

3.6.4.- Standard Modules

1.- Program Module…4080-150

Stores the program information. It is also used to load program modifications or updates. For update procedures please refer to next chapter.

2.- Memory Module….4080-970

Stores the unique data required to operate this particular machine; such as serial number, original factory parameters, etc. This module should never be exchanged with another machine.

3.- Output Module…4080-140

They are responsible for transferring signals from the computer to the working elements such as valves, motors and relays, etc.

4.- Input Module…4080-110

They are responsible for transferring signals from the machine to the computer such as switches, electric eyes, sensors, etc.

NOTE :

1. Even though all output and/or input modules within the machine are identical, they cannot be moved to another location on the serial bus cable, as the computer automatically assigns a working address for each one.
2. If a replacement is necessary, always replace with a new or loaner module from another machine.
3. Electrical Power to the machine must be turned "OFF" during replacements.
4. Computer will show an error if one or more modules are missing.

Procedure:

Remove the old module and connect the new one, after turning on the power, the computer will reassign the address to this new module.

5.- Update a Machine using a New Program Module

NOTE: Very Important
Before starting the procedure below, go to Advanced Settings and **write down all the settings shown in these screens.**

1. Turn off power to the machine.
2. Replace the existing Program Module with the Program Module that contains the updated program.
3. With your finger on the screen, turn power on to the machine. When the screen changes from dark to light, remove your finger from the screen.
4. Carefully calibrate the screen. See screen calibration.

ATTENTION: Do not turn off the machine during this process for any reason, as vital information will be corrupted and it will be necessary to the call manufacturer for assistance and/or return the touch screen and module for base programming.

5. Press the "Update Controller" button. Input mechanic security code (33333). This process takes up to 5 minutes and asks you to press the "Continue" button once during this time.
   When complete the Controller will contain the updated program.

NOTE: Continue to item 6 only if you need to reprogram original module.

6. Turn off power to the machine.
7. Replace the Program Module that you installed in step #2 with the original Program Module that came with the machine.
8. With your finger on the screen, turn power on to the machine. When the screen changes from dark to light, remove your finger from the screen.
9. Carefully calibrate the screen.
10. Press the "Update Program Mod" button. Input technician security code (xxxxx). This process takes up to 5 minutes. When complete the original Program Module that came with the machine and the Controller will contain the updated program.

Now that the process is complete, go to Advanced Settings and verify them using the settings you wrote down at the beginning of the process. Make any necessary corrections.

3.7.- Maintenance

All maintenance should be performed by a qualified service technician.

• Maintenance should only be performed by trained, qualified personnel. Before performing any maintenance or repair work, switch off the electrical, pneumatic, etc. power to the machine at the main source and secure it with a padlock so that it cannot be switched on again without authorization. Refer to lockout/tag out procedures.
• Always wear proper safety equipment when operating or performing maintenance on any equipment.
• All recommended maintenance is for a single shift schedule; adjust as necessary for a multi-shift operation.
• Equipment should not be used for purposes other than designed or specified.

3.7.1.- Daily (8 -10 hrs. of operation)

• Follow manufacturer's recommendations and guidelines for operation, maintenance, and lubrication of the sewing head.
• Check for proper oil level and/or flow in the sewing head and other oil filled or lubed equipment, fill as needed. Oil all points as indicated.
• Clean the machine at the end of every shift or as excess materials accumulate.
• Clean lint, waste, etc. from the sewing, looper and needle, area as it accumulates, remove or open covers as necessary for access.
• Remove any threads or other material(s) wrapped around or between any moving parts.
• Wipe all photocell lenses with a clean non-abrasive dry cloth.
• Open or remove doors and/or covers and inspect belt(s) for debris or wear and clean or replace as necessary.
• Monitor the air pressure filter/regulator and empty as necessary.
• Investigate and report any unusual noises to the proper personnel.

3.7.2.- Weekly (40 hrs. of operation)

• Check the sewing head drive belt for proper tightness and wear. Adjust and replace as necessary.
• Inspect photocell reflective tape, i.e. (machine hand wheel, etc.) and replace if dirty or worn.
• Inspect pillow blocks and other bearings (conveyors and rotating shafts) and remove thread and debris.
• Inspect all moving parts to ensure smooth operation, lube or clean as necessary. Monthly (160 hrs. of operation)
• Inspect pillow blocks and other non-sealed bearings (conveyors and rotating shafts) and apply one shot of recommended grease to each bearing/fitting.
• Refer to the manufacturer's guidelines for oil and oil filter changes and other maintenance pertaining to the sewing head and other OEM equipment.
• Monitor the air pressure filter/regulator and replace the filter as necessary

3.8.- Troubleshooting

3.8.1.- Efka Controller Error

General Information			
On the control	**On the V810**	**On the V820**	**Signification**
A1	InF A1	InF A1	Pedal not in neutral position, when turning the machine on
A2	-StoP- blinking	-StoP- blinking + symbol display	Machine run blockage
A3	InF A3	InF A3	Reference position is not set
A6	InF A6	InF A6	Light barrier monitoring
A7	Symbol blinking	Symbol blinking	Bobbin thread monitor

Programming Functions and Values (Parameters)			
On the control	**On the V810**	**On the V820**	**Signification**
Returns to 000 or to last parameter number	Returns to 0000 or to last parameter number	Like V810 + display InFo F1	Wrong code number or parameter number input

Serious Condition			
On the control	**On the V810**	**On the V820**	**Signification**
E1	InF E1	InF E1	The external pulse encoder e.g. IPG... is defective or not connected.
E2	InF E2	InF E2	Line voltage too low, or time between power off and power on too short.
E3	InF E3	InF E3	Machine blocked or does not reach the desired speed.
E4	InF E4	InF E4	Control disturbed by deficient grounding or loose contact.
E9	InF E9	InF E9	EEPROM defective.

Hardware Disturbance			
On the control	**On the V810**	**On the V820**	**Signification**
H1	InF H1	InF H1	Commutation transmitter cord or frequency converter disturbed.
H2	InF H2	InF H2	Processor disturbed

3.8.2.- Flow Chart EFKA Error E1

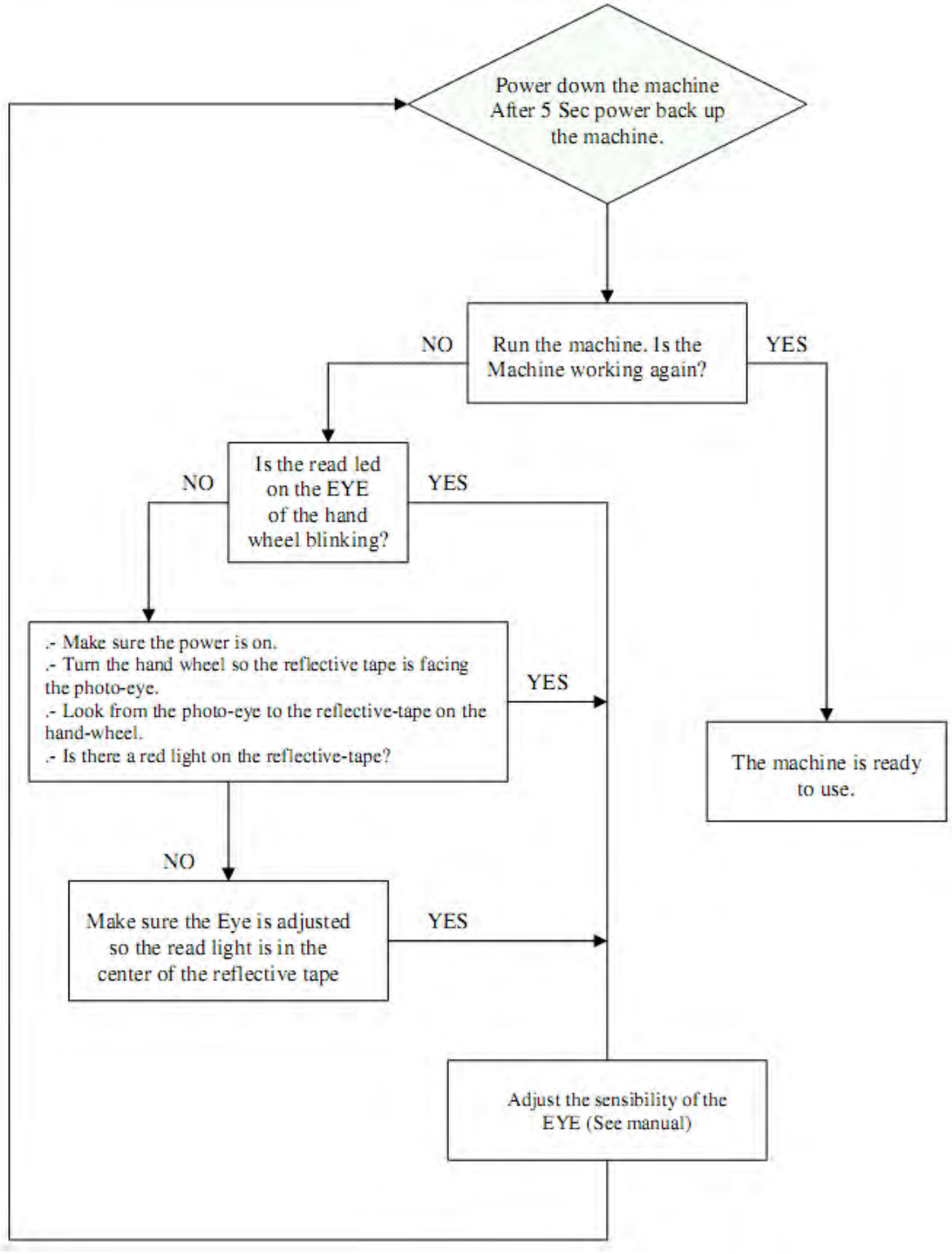

Sewing trouble shooting

1. Handles are not straight
   a. Foot Pressure on Sergers. (Both units must have equal pressure.)
   b. Check top feed control box settings (They must be the same number value)
   c. Trim knife on sew head is dull or too low.

2. Handles not cutting properly
   a. Handle knife blades dull. See page 42
   b. Too much pressure on handle feed puller

3. Too much or not enough handle trim
   a. Adjust handle length setting up or down depending on size needed.

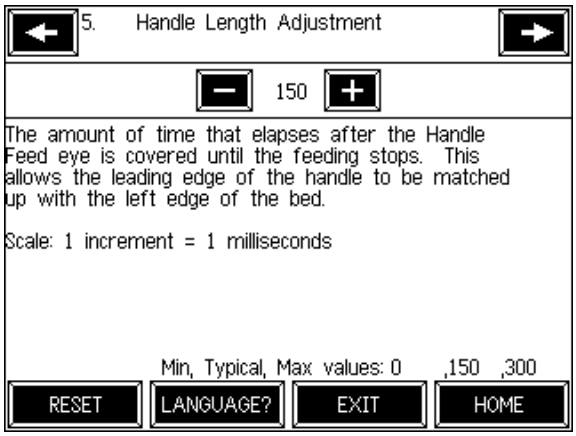

4. Handle already prepped error
   a. Check handle length eye adjustment
   b. Replace reflective tape on handle clamp.

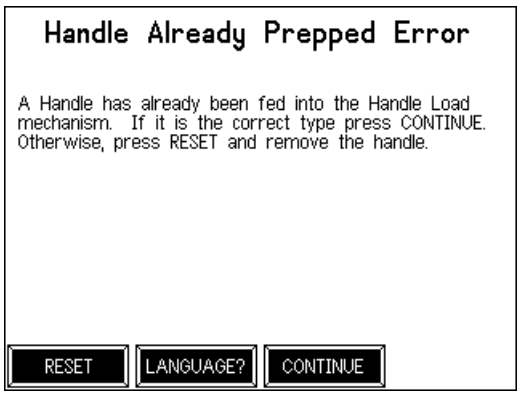

5. Handle feed timeout error
   a. Out of handle material
   b. Check handle length eye adjustment
   c. Handle feed puller is not down or handle material is jammed.

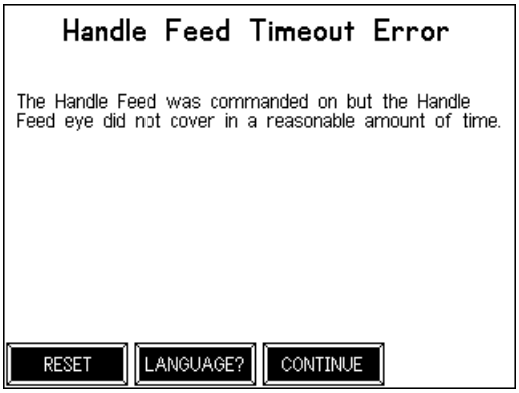

6. False thread breaks error
   a. Adjust thread detect on delay setting (right or left)

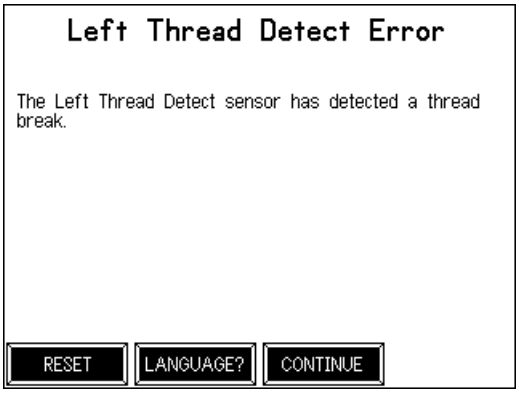

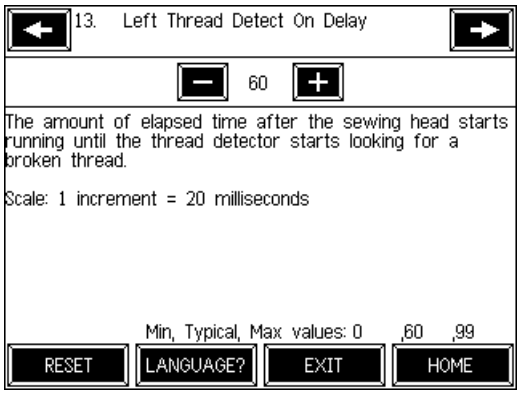

7. False flaw mark error
   a. Recalibrate flaw mark eye. Refer to page 48.

8. Closer head not trimming (optional equipment)
   a. Replace under trimmer knife blades.

Assembly Drawings & Parts Lists

The materials contained herein are confidential and proprietary information of Atlanta Attachment Company. In addition to any confidentiality and non-disclosure obligations that currently exist between you and Atlanta Attachment Company, your use of these materials serves as an acknowledgment of the confidential and proprietary nature of these materials and your duty not to make any unauthorized use or disclosure of these materials.

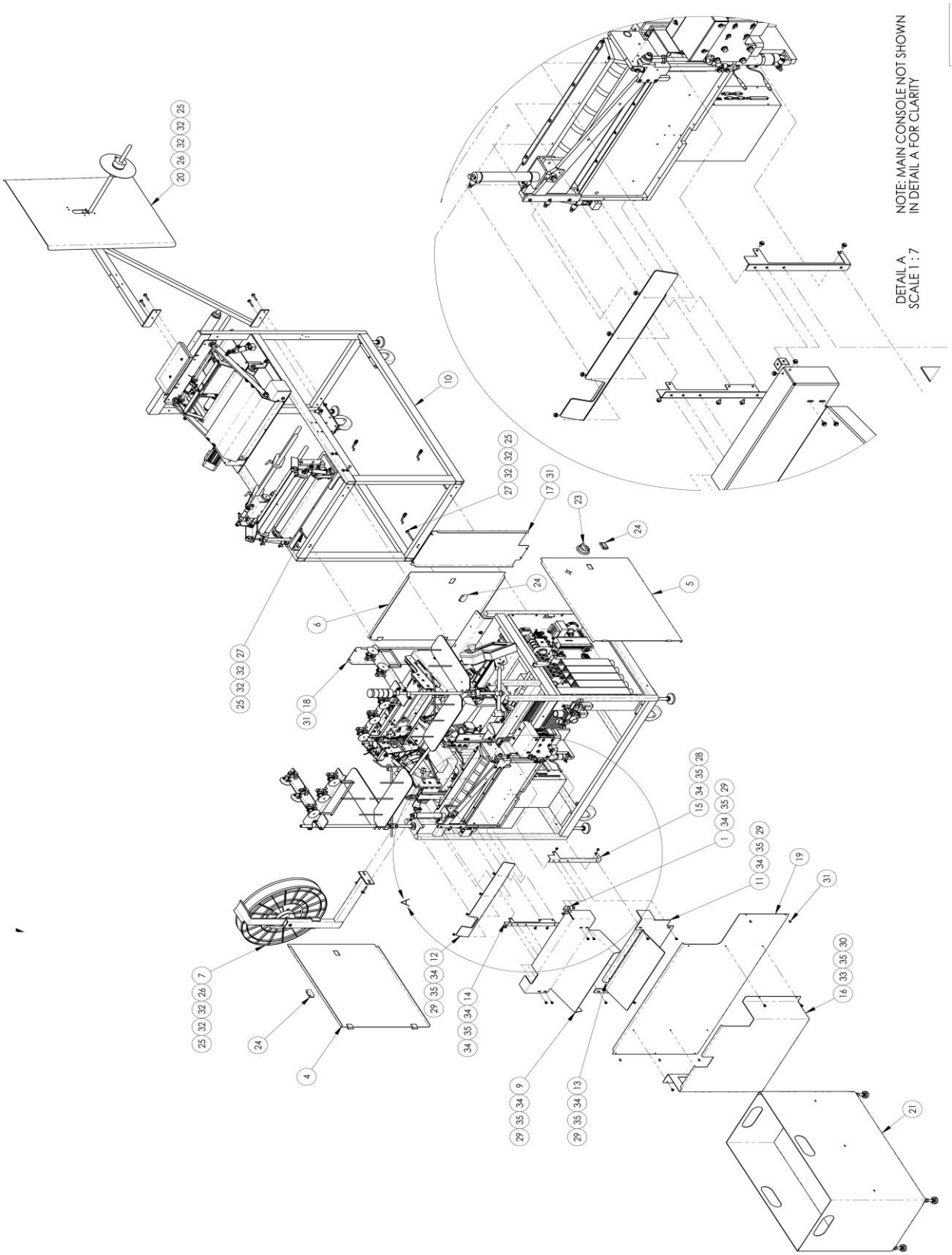
NOTE: MAIN CONSOLE NOT SHOWN IN DETAIL A FOR CLARITY
DETAIL A
SCALE 1 : 7

4300B VERTICAL HANDLE INSERTER, 18”

AAC Drawing Number 9002862 Rev 3

NO	QTY.	PART #	DESCRIPTION
1	1	98-6819A	BRKT,CORNER 2 x 10-32
2	1	4300-PD	DIAGRAM,PNEUMATIC
3	1	4300-WD	DIAGRAM,WIRING
4	1	4300033	DOOR,RIGHT
5	1	4300036	DOOR, CONT. BOX
6	1	4300039	DOOR,FRONT CENTER
7	1	4300130	ROLL HOLDER ASSY
8	1	4300150	CONSOLE,L&R HEAD,18"
9	1	4300160	GUARD,TOP HALF,4300A
10	1	4300170	BORDER PREFEED ASSEMBLY
11	1	4300172	COVER,BOTTOM, GUILLOTINE
12	1	4300173	SHIELD,TOP,GUILLOTINE
13	1	4300174	GUARD, BOTTOM
14	1	4300204	BRKT,GUARD,LEFT SIDE
15	1	4300206	BRKT,GUARD,RIGHT SIDE
16	1	4300216	PANEL,GUILLOTINE C/BOX
17	1	4300218	COVER, FRONT LEFT
18	1	4300219	COVER, FRONT RIGHT
19	1	4300220	COVER, REAR
20	1	4300300	ROLL HOLDER ASSY
21	AR	33008300	BORDER BOX ASBLY
22	3	AATPWL1	LOOM,WIRE,1"
23	1	EESDHRY	DISCONNET HANDLE, RED/YEL
24	3	MM40450010	FASTENER,SLIDE LOCK
25	10	NNK1/4-20	NUT,KEP,1/4-20
26	6	SSHC01112	HEX HEAD BOLT 1/4-20X1.75
27	4	SSHC01176	1/4-20 X 2-3/4 HHCS
28	5	SSHC95032	SCREW, HEX CAP
29	17	SSHC98024	10-32 X 3/8 HEX CAP
30	5	SSHC98032	10-32X1/2 HEX HD
31	13	SSZS93032	SCREW, SHT.METAL 10 ZIP
32	20	WWF1/4	WASHER, FLAT, 1/4", COM
33	5	WWF10	WASHER, FLAT, #10, COM
34	22	WWFS10	WASHER, FLAT, #10, SAE
35	27	WWL10	WASHER,LOCK,#10

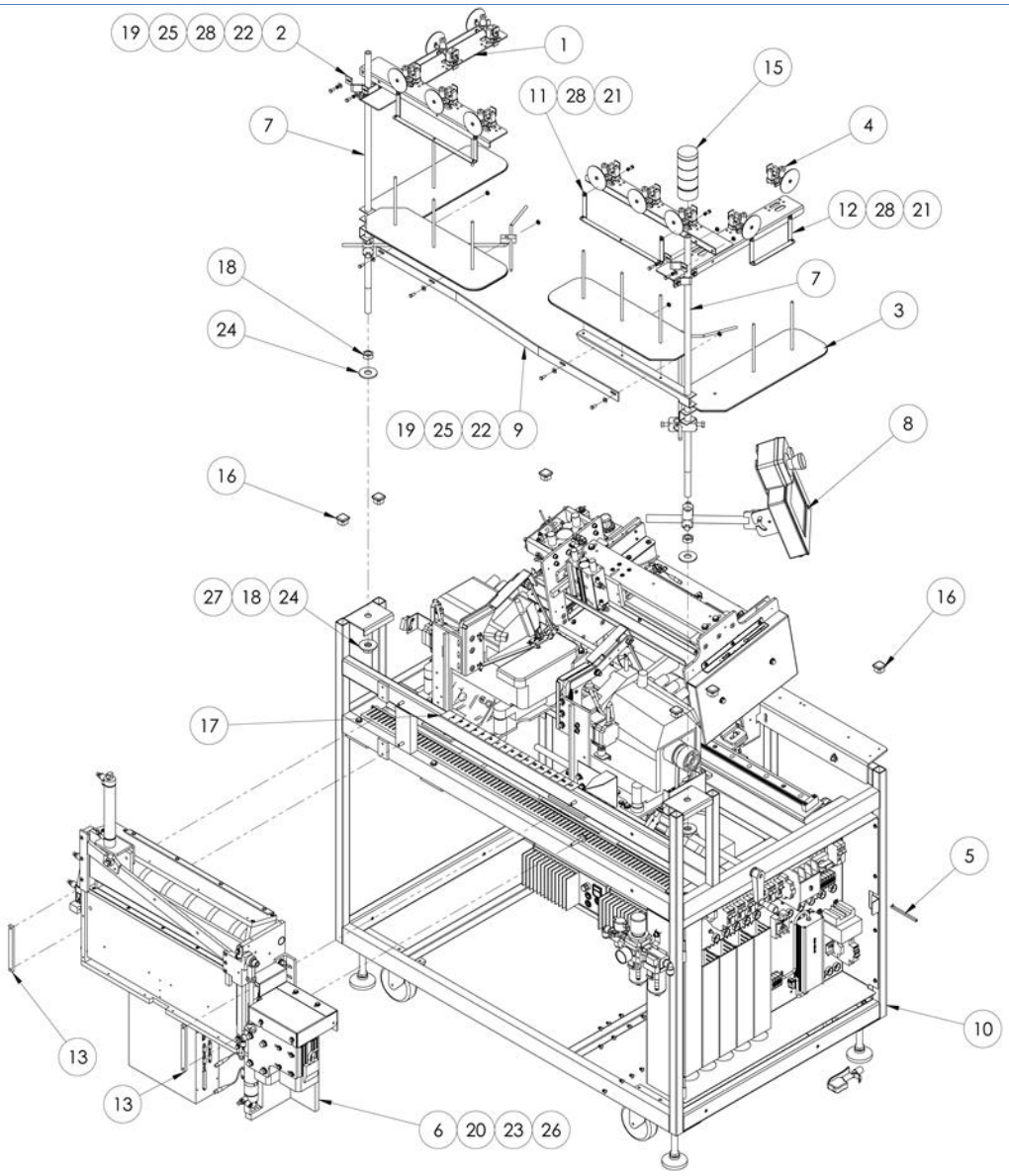

4300150 Dual Motor Heavy Duty

AAC Drawing Number 4300150 Rev 1

NO	QTY	PART #	DESCRIPTION	NO	QTY	PART #	DESCRIPTION
1	4	0411-069C	BRKT,THREAD BRK DETECTION	15	1	EELES302RAGM2	TOWER,SIGNAL,NO POLE
2	4	0411-070	CLAMP, SENSOR BRACKET	16	6	MM132-1202	END CAP,SQUARE,BLACK
3	4	1959-161	3 POS THREAD PLATE ASSY.	17	1	MM1910A22M	RULER,SILVER MYLAR 18"
4	10	4003-IS3WT2	SENSOR,THREAD BREAK	18	4	NNH5/8-18	NUT,HEX,5/8-18
5	1	1355487	DISCONNECT SHAFT,MOD	19	12	NNK10-32	KEP NUT, 10-32
6	1	1366140	GULLIOTINE ASSEMBLY,18"	20	4	SSHC01112	HEX HEAD BOLT 1/4-20X1.75
7	2	4300056	POLE, THREAD STAND	21	8	SSHC98024	10-32 X 3/8 HEX CAP
8	1	4300103	TOUCH SCREEN ASBLY	22	12	SSHC98032	10-32X1/2 HEX HD
9	1	4300189	THREAD STAND BRACE	23	4	WWF1/4	WASHER, FLAT, 1/4", COM
10	1	4300190	MAIN ASSY, HEAVY DUTY,18"	24	4	WWF5/8	WASHER,FLAT,5/8
11	2	4300294	GUIDE,3-THREAD	25	12	WWFS10	WASHER, FLAT, #10, SAE
12	2	4300296	GUIDE,2-THREAD	26	4	WWL1/4	WASHER,LOCK,1/4
13	2	4300444	PLATE,NUT,1/4-20@4.88 CTC	27	2	WWL5/8	5/8 LOCK WASHER
14	1	AATPWL1	LOOM,WIRE,1"	28	16	WWL10	WASHER,LOCK,#10

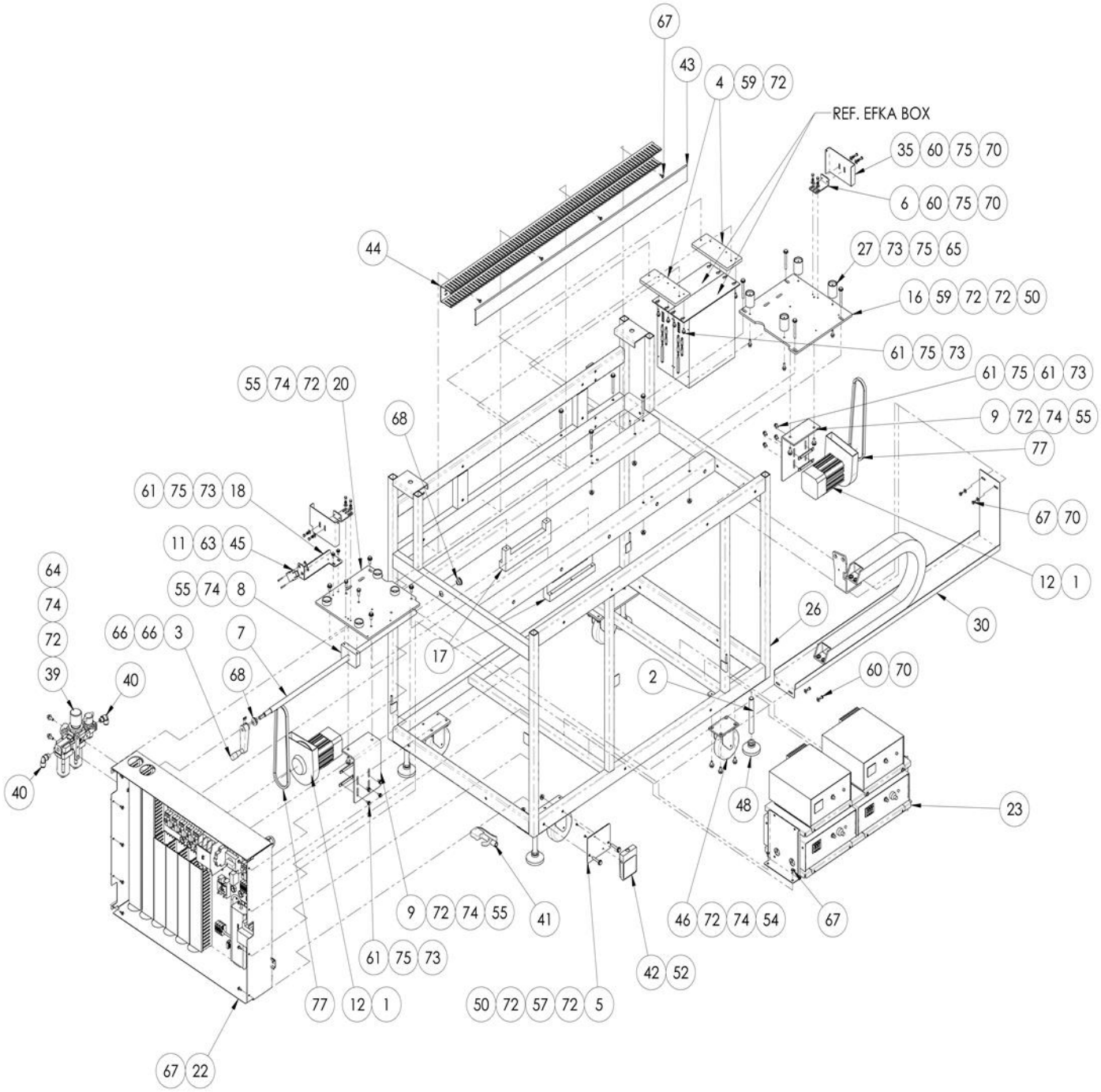
67
43
4 59 72
REF. EFKA BOX
35 60 75 70
6 60 75 70
44
27 73 75 65
16 59 72 72 50
61 75 73
61 75 61 73
9 72 74 55
77
55 74 72 20
68
61 75 73 18
11 63 45
55 74 8
64
74
72
39
40
66 66 3
7
68
17
2
26
30
60 70
67 70
12 1
48
23
9 72 74 55
41
46 72 74 54
67
61 75 73
42 52
77 12 1
50 72 57 72 5
67 22

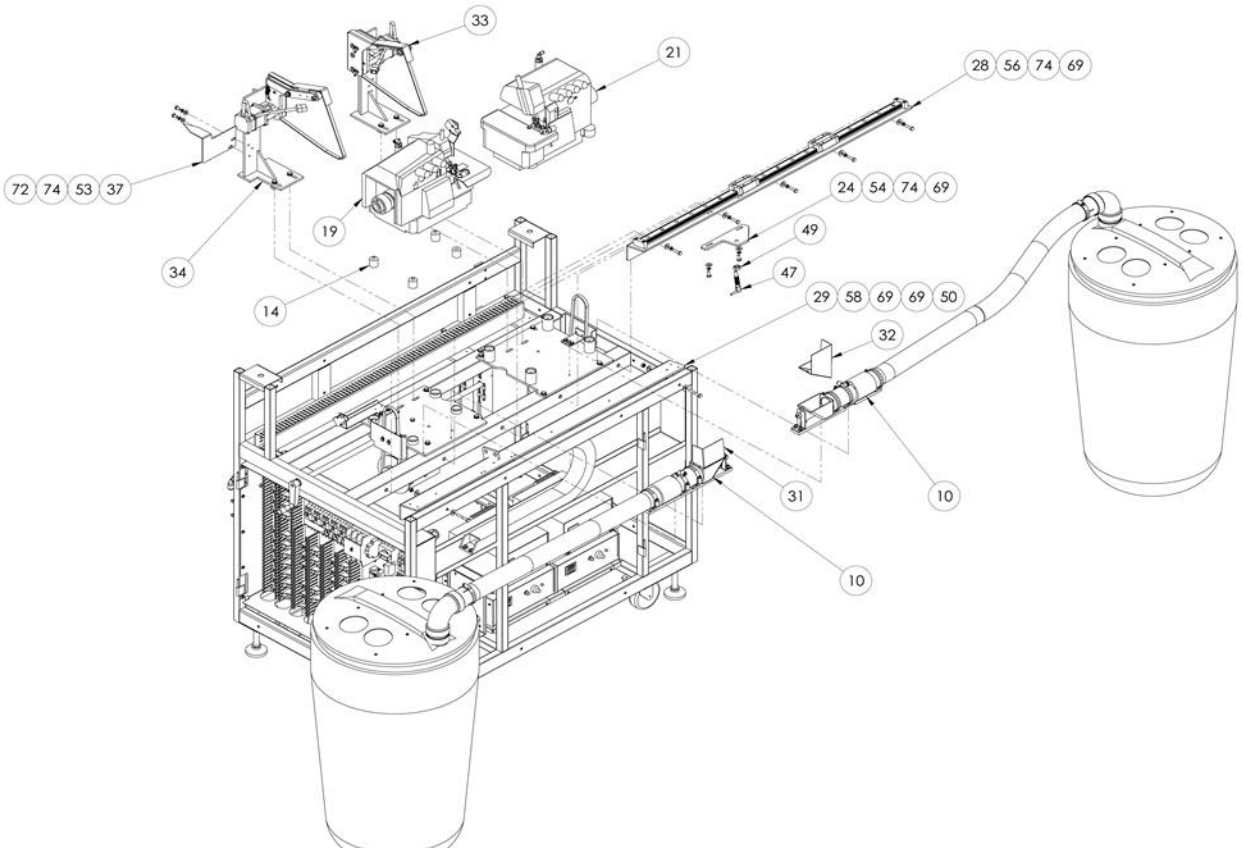
33
21
28 56 74 69
72 74 53 37
24 54 74 69
19
49
34
47
14
29 58 69 69 50
32
31
10
10

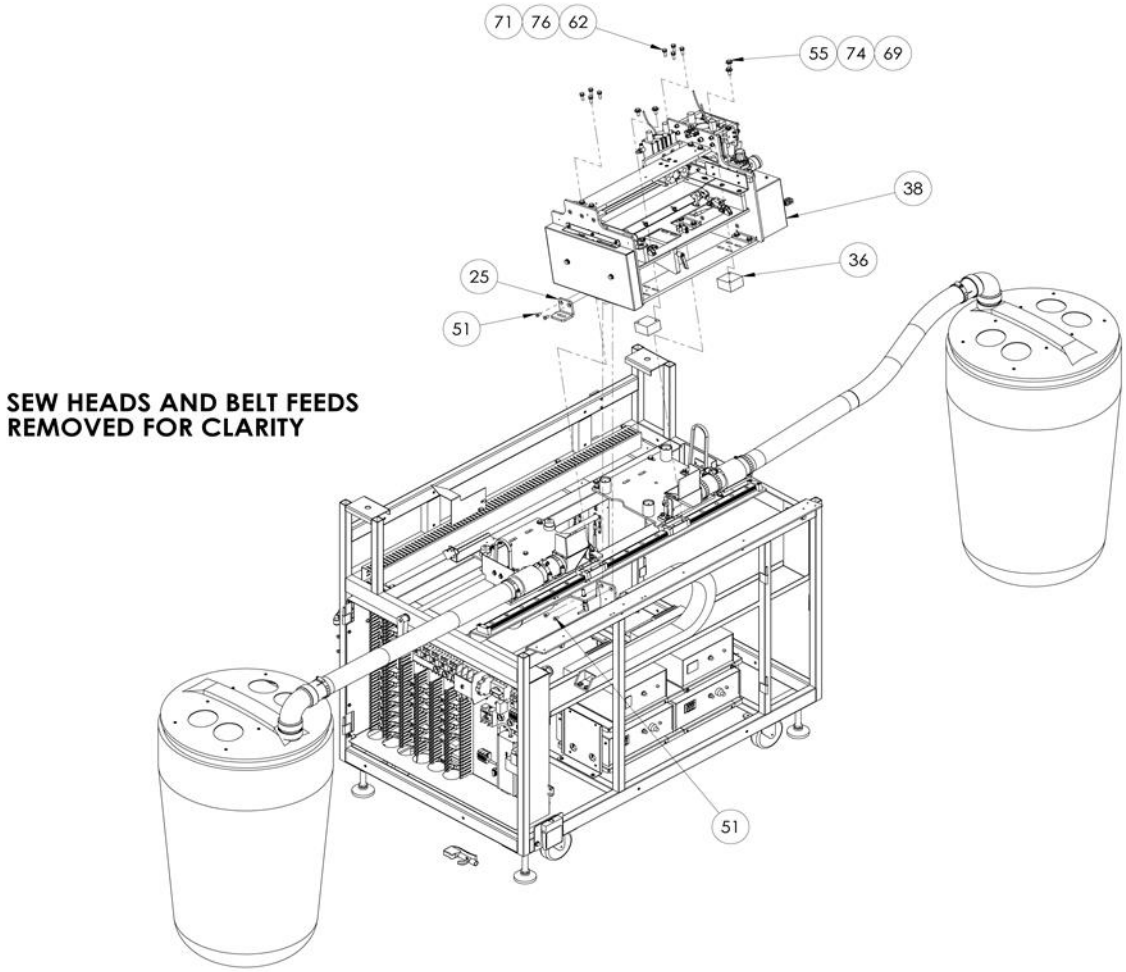
71 76 62
55 74 69
38
36
25
51
SEW HEADS AND BELT FEEDS
REMOVED FOR CLARITY
51

4300190 Heavy Duty Main Assembly, 18”

AAC Drawing Number 4300190 Rev 1

NO	QTY	PART #	DESCRIPTION	NO	QTY	PART #	DESCRIPTION
1	4	0211-209	PLATE,NUT,10-32@2.25 CTC	40	2	AAQME-3-4	MALE ELBOW 3/8OD TUBE
2	4	0411-1063	THREADED ROD	41	1	AAVBG35C	BLOW GUN ASSY WITH HOSE
3	1	951A-0844	CRANK HANDLE, MODIFIED	42	1	EE24F163	FOOTSWITCH, TREADLITE
4	2	1961-122	MT, DUAL MOTOR CONTROL	43	4'	EEDC2X2	COVER,WIRE DUCT
5	1	1961-159	PLATE, MOUNT, FOOT PEDAL	44	4'	EEDF2X2	DUCT,WIRE,2X2, MOD
6	2	1961-161A	BRKT,BELT GUARD	45	1	FFSM312LVQ	EYE,ELECTRIC,10-30VDC
7	1	1961-406A	ROD, HEAD LOCATION, ADJ.	46	4	MM431-4	CASTER,4",W/LOCKS
8	1	1961-412A	BLOCK,INDEX,LEFT HEAD	47	1	MM3403A16	PIN,QUICK RELEASE
9	2	1961-421	MT,MOTOR,EFKA	48	4	MML-2	LEVELING PAD, 5/8-11
10	2	1961-800F	WASTE ASSEMBLY	49	1	NNJ1/2-13	1/2-13 JAM NUT
11	1	1975-412A	PLATE,NUT,4-40,.95CTC	50	8	NNK1/4-20	NUT,HEX,KEP,1/4-20,W/LOCK
12	2	4059-DC1500	MOTOR,DC WITH CONTROLLER	51	4	SSFC01032	1/4-20 X 1/2 FLAT ALN CAP
13	AR	4300-WD	DIAGRAM,WIRING	52	2	SSFS80016	6-32 X 1/4, FLAT SLOT
14	3	205473	CUSHION,RUBBER,W/PIN	53	2	SSHC01032	1/4-20 X 1/2 HHCS
15	1	210523	CUSHION,RUBBER,NO PIN	54	18	SSHC01040	1/4-20 X 5/8 HHCS
16	1	4300011	PLATE, MOUNT, RIGHT HEAD	55	14	SSHC01048	1/4-20 X 3/4 HEX CAP
17	2	4300018	RAIL,GUIDE	56	5	SSHC01064	1/4-20 X 1 HHCS
18	1	4300019	MOUNT, POSITION EYE	57	2	SSHC01096	1/4-20 X 1-1/2 HHCS
19	1	4300020	SEWING HEAD ASSY,LH	58	2	SSHC01112	HEX HEAD BOLT 1/4-20X1.75
20	1	4300022	PLATE,LEFT HEAD	59	8	SSHC01160	1/4-20 X 2-1/2 HHCS
21	1	4300030	SEWING HEAD ASM,SS, RH	60	10	SSHC98024	10-32 X 3/8 HEX CAP
22	1	4300035	CONTROL ASSEMBLY	61	19	SSHC98032	10-32X1/2 HEX HD
23	1	4300065	STEPPER BOX ASBLY	62	8	SSHCM6X20	SCREW, HEX M6X20L
24	1	4300079	BRKT, LOCATOR PIN	63	2	SSPS70048	4-40 X 3/4 PAN HD SLOTTED
25	1	4300126	BRKT, LOCATOR PIN	64	2	SSSC01048	1/4-20 X 3/4" SOC CAP SC
26	1	4300191	FRAME,V.H. BORDER,18" CAP	65	4	SSSC98048	10-32 X 3/4 SOC CAP
27	4	4300195	MOUNT,ISOLATOR	66	2	SSSS98016	SCREW,SKT SET,FLAT POINT
28	1	4300221	INSERT RAIL ASSEMBLY,18"	67	19	SSZS93032	SCREW, SHT.METAL 10 ZIP
29	1	4300222	BRKT, MTG, LINEAR RAIL	68	2	UUFF723-05	BEARING,BRONZE,.505ID
30	1	4300223	CABLE TRACK ASSEMBLY,18"	69	15	WWF1/4	WASHER, FLAT, 1/4", COM
31	1	4300241	WASTE FUNNEL, LEFT	70	12	WWF10	WASHER, FLAT, #10, COM
32	1	4300242	WASTE FUNNEL, RIGHT	71	8	WWFM6	WASHER, FLAT, M6, SAE
33	1	4300270	TOP BELT FEED ASSY, RIGHT	72	44	WWFS1/4	WASHER,FLAT,SAE,1/4
34	1	4300280	TOP BELT FEED ASSY, LEFT	73	22	WWFS10	WASHER, FLAT, #10, SAE
35	2	4300293	GUARD, V-BELT	74	41	WWL1/4	WASHER,LOCK,1/4
36	2	4300312	BLOCK, SLIDE	75	30	WWL10	WASHER,LOCK,#10
37	1	4300375	POINTER, BORDER WIDTH	76	8	WWLM6	WASHER,LOCK,M6
38	1	4300490	HANDLE CUT, INSERT ,18"	77	2	ZX3827	V-BELT,3/8 X 27"
39	1	AA198-5110	FILTER/REGULATOR/LOCKOUT				

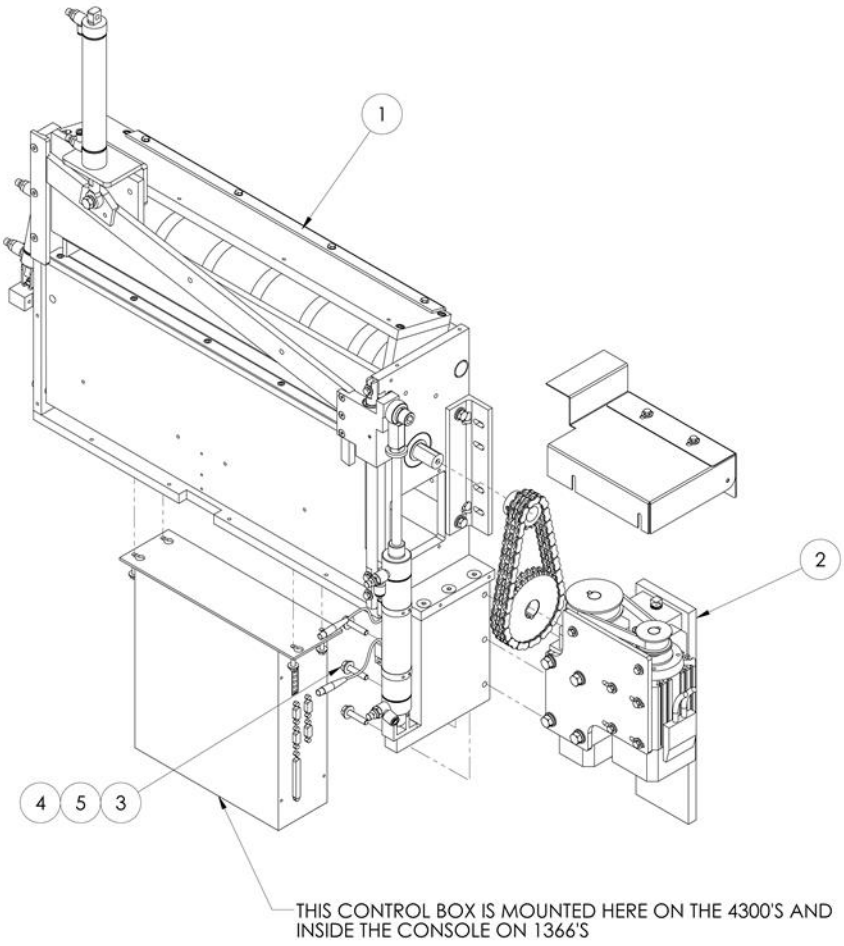

1366140 Guillotine Assembly, 18”

AAC Drawing Number 1366140 Rev 0

NO	QTY	PART #	DESCRIPTION
1	1	1366114	GULLIOTINE ASSY, 18"
2	1	1366150	ADAPTOR, WORM GEAR DRIVE
3	3	SSHC01080	1/4-20 X 1-1/4 HHCS
4	3	WWFS1/4	WASHER,FLAT,SAE,1/4
5	3	WWL1/4	WASHER,LOCK, 1/4
6	1	1366188	GUARD, TOP ROLLER

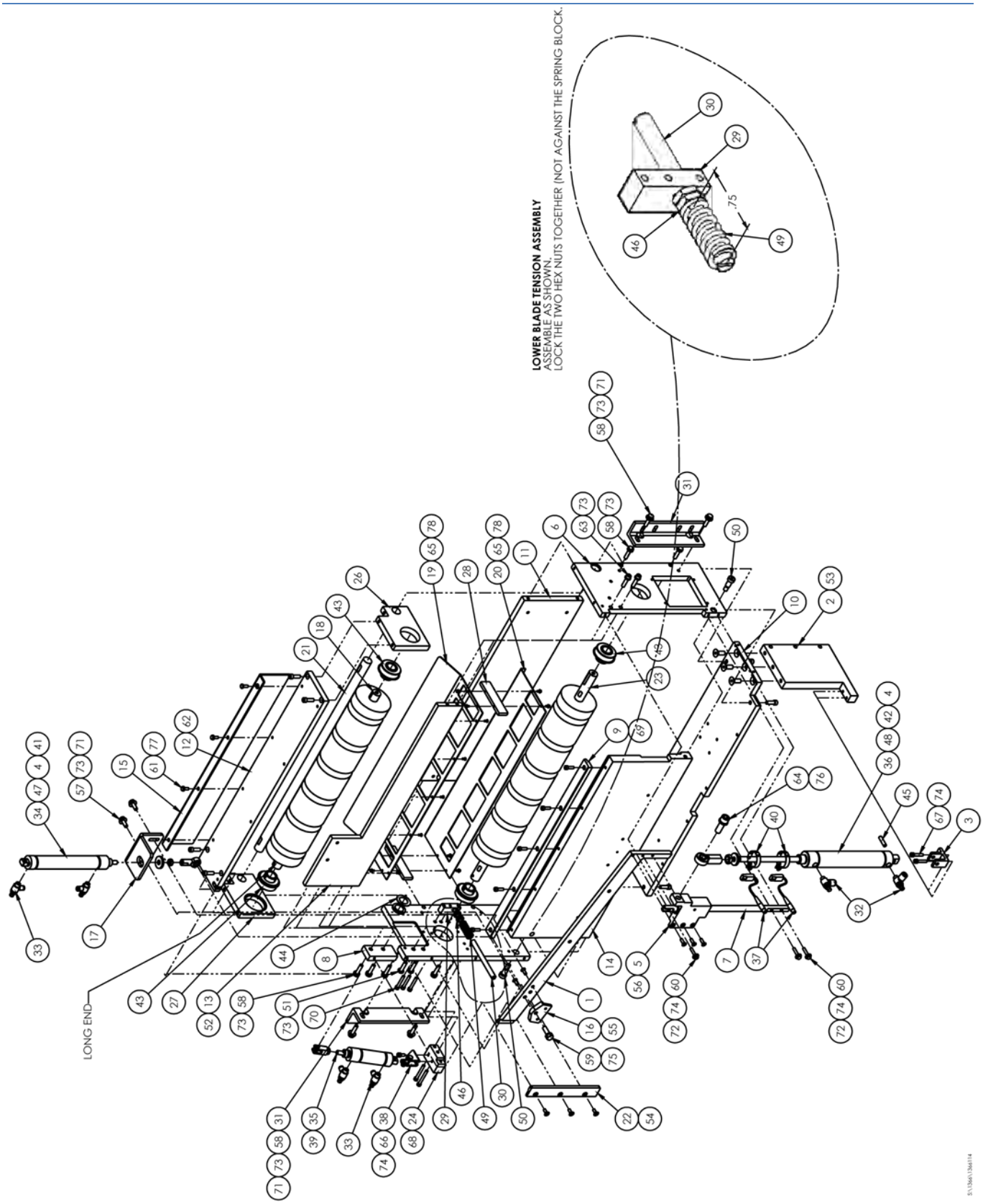
LOWER BLADE TENSION ASSEMBLY
ASSEMBLE AS SHOWN.
LOCK THE TWO HEX NUTS TOGETHER (NOT AGAINST THE SPRING BLOCK.
.75
LONG END

1366114 Guillotine Assembly,18”

AAC Drawing Number 1366114 Rev 2

NO.	QTY	PART #	DESCRIPTION	NO.	QTY	PART #	DESCRIPTION
1	1	1366113	TOP BLADE, 18" CAPACITY	40	2	AAFD35000	BAND, SWITCH, HSKQ,UNV.
2	1	1366144	MOUNT, PIVOT BRKT	41	1	BBAW-5Z	ROD END, SPHERICAL .5/16ID
3	1	1366145	MOUNT, CYLINDER PIVOT	42	1	BBAW-7	BEARING,ROD END,FEMALE
4	2	273-4-503A	WASHER,LEATHER	43	4	BBS8703-88	BEARING,BALL,.75IDX1.75OD
5	1	3200082	BLOCK,GUIDE,TOP BLADE	44	1	BBTRA1220	WASHER,THRUST,STEEL
6	1	3200121	PLATE,FRONT SLIDE	45	1	IID016X064	DOWEL PIN,1/4 X 1
7	1	3200124	SHAFT, TOP BLADE	46	2	NNJ3/8-24	3/8-24 JAM NUT
8	1	3200129	BLOCK, PLATE RUB MOUNTING	47	1	NNJ5/16-24	NUT,JAM,5/16-24
9	1	32004002A	BLADE, BOTTOM 18" CAPACIT	48	1	NNJ7/16-20	NUT,JAM,7/16-20
10	1	4300155	PLATE, BASE	49	1	RRLC092H6	SPRING,COMP,.092X.60X1.5
11	1	4300156	PLATE, MAIN MTG.	50	2	SSAS024040	SCREW,ALLEN,SHOULDER
12	1	4300157	PLATE, BACK	51	2	SSBC01064	1/4-20 X 1 BUT CAP SC
13	1	4300158	BAR, TIE	52	5	SSBC70016	#4-40 X 1/4 BHCS
14	1	4300159	PLATE, HINGE	53	3	SSFC10056	5/16-18X7/8 FLAT HD CAP
15	1	4300161	GUARD, TOP	54	3	SSFC95032	10-24 X 1/2 FLAT ALLEN
16	1	4300162	PUSH BRACKET	55	2	SSFC98032	10-32 X 1/2 FLAT ALLEN CAP
17	1	4300163	MOUNT, CYLINDER	56	3	SSFC98040	#10-32 X 5/8 FLAT ALLEN
18	1	4300164	ROLLER, TOP DRIVE	57	2	SSHC01048	1/4-20 X 3/4 HEX CAP
19	1	4300165	GUARD, TOP ROLLER	58	10	SSHC01064	1/4-20 X 1 HHCS
20	1	4300166	GUARD, BOTTOM ROLLER	59	1	SSHC10064	5/16-18 X 1 HHCS
21	1	4300167	SHAFT, FLATTED, JR, .75OD	60	3	SSHC95064	SCREW, HEX CAP
22	1	4300171	PLATE, RUB, TOP BLADE	61	8	SSHC98032	10-32X1/2 HEX HD
23	1	32004027	ROLLER, TOP DRIVE	62	8	SSSC01048	1/4-20 X 3/4" SOC CAP SC
24	1	32004063	MOUNT, AIR CYLINDER	63	2	SSSC01064	1/4-20 X 1 SOC CAP
25	1	33004008	PLATE,REAR SIDE	64	1	SSSC40080	7/16-20 X 1-1/4 SOC CAP
26	1	33004009	ARM, TOP LEFT	65	8	SSSC70016	4-40 X 1/4 SOCKET CAP
27	1	33004014	ARM, TOP RIGHT	66	2	SSSC95032	10-24 X1/2, SOC CAP
28	2	33004015	GUIDE, INTERNAL	67	2	SSSC95064	10-24 X1, SOC CAP
29	1	33004017	BLOCK, SPRING	68	2	SSSC95096	10-24 X1-1/2, SOC CAP
30	1	33004031	POST, SPRING	69	5	SSSC98040	10-32 X 5/8 SOC CAP
31	2	33004058A	MOUNTING, GUILLOTINE	70	3	SSSC98080	10-32 X 1-1/4 SOC CAP
32	2	AA198RA408	FLOW CONTROL,1/4 X 1/8	71	6	WWFS1/4	WASHER,FLAT,SAE,1/4
33	4	AA198RA508	FLOW CONTROL,5/32 X 1/8"	72	7	WWFS10	WASHER, FLAT, #10, SAE
34	1	AAC095DP	CYLINDER,AIR,DA	73	16	WWL1/4	WASHER,LOCK,1/4
35	1	AAC6DP-1	CYLINDER,AIR,DA	74	11	WWL10	WASHER,LOCK,#10
36	1	AACM125DP	CYLINDER,AIR,DA W/MAGNET	75	1	WWL5/16	WASHER, LOCK, 5/16
37	2	AAEHSKQ	SWITCH,HALL EFFECT(SMC)	76	1	WWL7/16	WASHER,LOCK,7/16
38	1	AAFBP-11C	BRKT,PIVOT,1/4 BORE	77	4	wwsi10	WASHER,INTERNAL TOOTH,10
39	1	AAFCT-11	CLEVIS, 5/16-24 X 1/4 ID	78	8	WWSI4	WASHER,INT. TOOTH

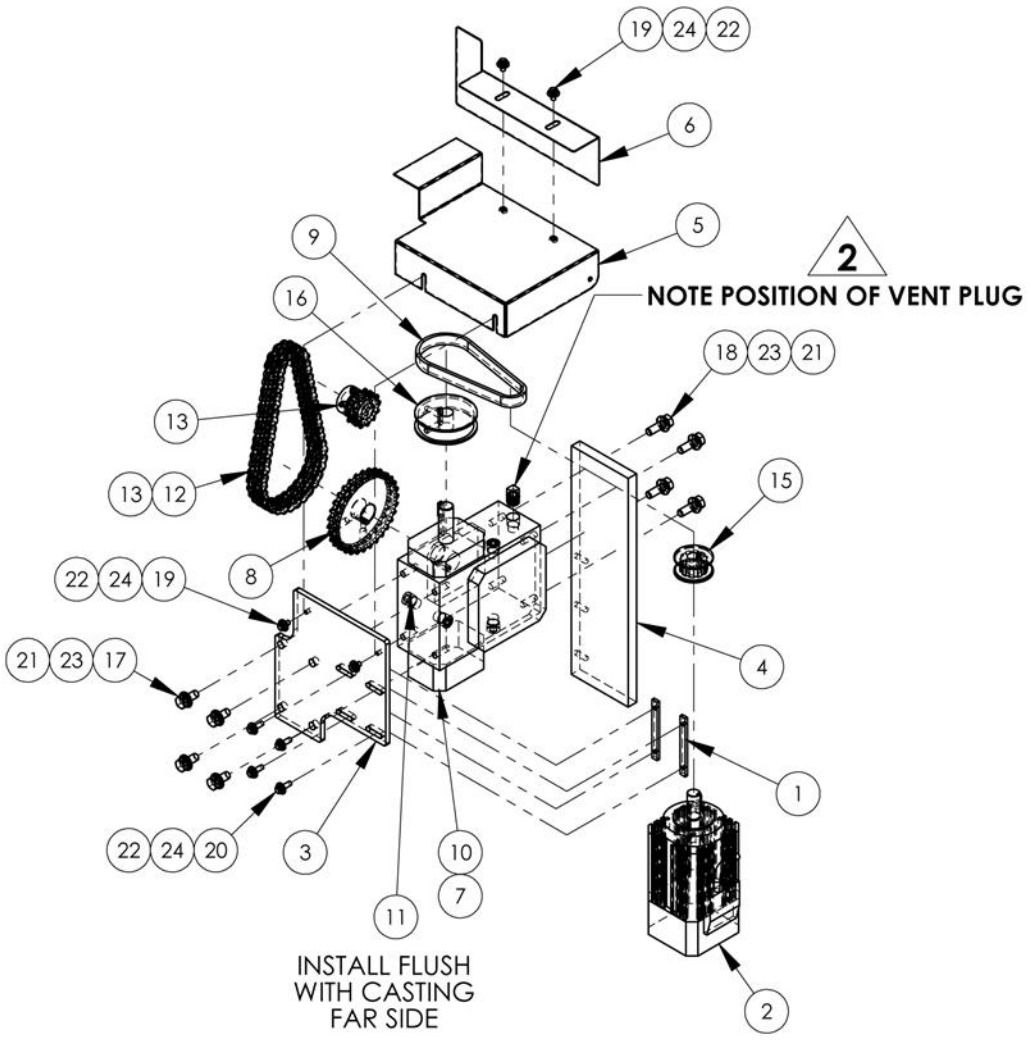

1366150 Worm Gear Drive Adaptor

AAC Drawing Number 1366150 Rev 2

NO	QTY	PART #	DESCRIPTION	NO	QTY	PART #	DESCRIPTION
1	2	0211-209	PLATE,NUT,10-32@2.25 CTC	13	1	MMD35B12M	SPROCKET,22T,DBL,3/4B
2	1	4059-DC1500	MOTOR & CONTROLLER	14	*1	MMD35CL	MASTER LINK,DBL,#35 CHAIN
3	1	1366141	MTG. PLT, EFKA MOTOR	15	1	PP10LF050M3	PULLEY,GEAR,3/8P,10T,14MM
4	1	1366142	PLT,MNT,WORM DRIVE	16	1	PP20LB050M4	PULLEY,GEAR,3/8P,.63B,20T
5	1	1366143	GUARD,EFKA MOTOR	17	4	SSHC10048	5/16-18 X 3/4 HHCS
6	1	1366146	GUARD	18	4	SSHC10064	5/16-18 X 1 HHCS
7	2	1961028	KEY, 3/16 SQ X 11/16 LG	19	4	SSHC98024	10-32 X 3/8 HEX CAP
8	1	1961101	SPROCKET, 30T, 35, DBL,	20	4	SSHC98040	10-32X5/8 HEX HD
9	1	GG135L050	BELT, 3/8P,, 1/2W	21	8	WWFS5/16	WASHER,FLAT,SAE,5/16
10	1	MM20U1-30M1	WORM, REDUCE,30:1,RH	22	8	WWFS10	WASHER, FLAT, #10, SAE
11	1	MM4534K42	PLUG, FLUSH, 1/4" PIPE	23	8	WWL5/16	WASHER,LOCK, 5/16
12	1	MMD35 (18.75" LG)	CHAIN,STEEL, DBL #35-2 X 18.75 IN LG	24	8	WWL10	WASHER,LOCK,#10

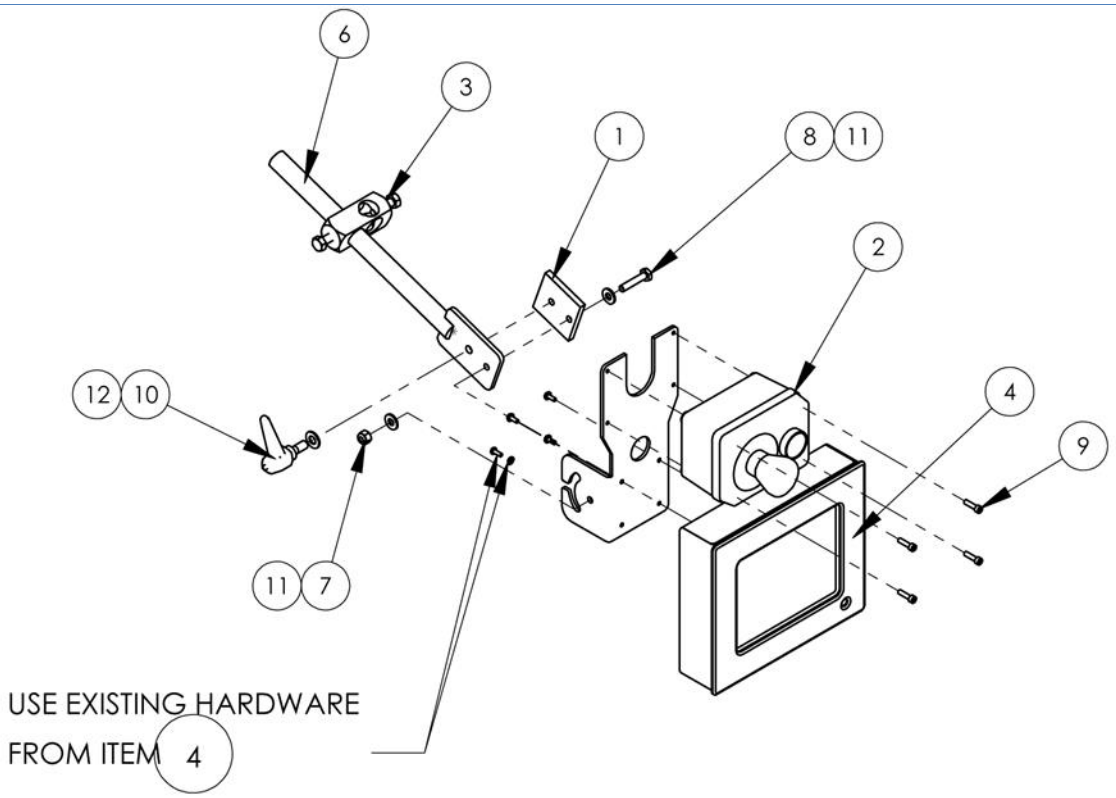

4300103 Touch Screen Assembly

AAC Drawing Number 4300103 Rev 1

NO	QTY	PART #	DESCRIPTION
1	1	0411-3708	NUT PLATE,BOX MOUNT
2	1	1278-6010	START/STOP BUTTON ASSY
3	1	28201	BLOCK,CROSS,(LARGE)
4	1	4080-004	TOUCH SCREEN
5	1	4300104	MOUNT, TOUCH SC AND SW
6	1	4300114	ROD MOUNT, TOUCHSCREEN
7	1	NNE1/4-20	NUT,ELASTIC LOCK,1/4-20
8	1	SSHC01080	1/4-20 X 1-1/4 HHCS
9	4	SSSC90040	8-32 X 5/8 SOC CAP SC
10	1	TTH32425	HANDLE,THRDED,5/16-18X3/4
11	2	WWFS1/4	WASHER,FLAT,SAE,1/4
12	1	WWFS5/16	WASHER,FLAT,SAE,5/16

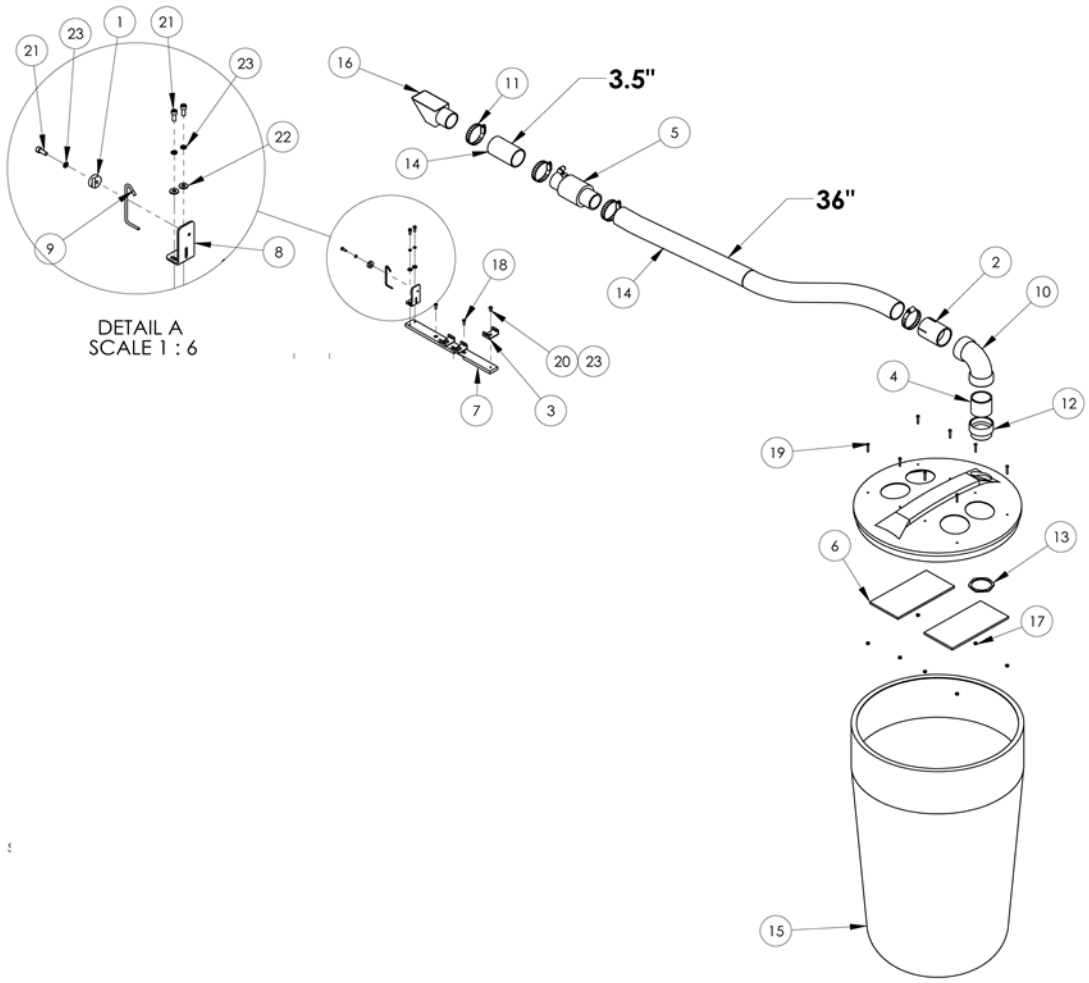

1961-800F Waste Assembly

AAC Drawing Number 9002612 Rev 3

NO	QTY	PART #	DESCRIPTION	NO	QTY	PART #	DESCRIPTION
1	1	1278-7154A	CLAMP, 1/8 TUBE	13	1	MM655462	RING, 2" THREADED LOCK
2	1	1961-802	ADAPTER, 2" PVC TO	14	*3.3 FT	MMFH200	HOSE,FLEX 2" ID
3	3	1961-803	CHANNEL, TUBE CLAMP	15	1	MMTC32GTAN	CONTAINER,WASTE
4	1	1961-809	PIPE SEGMENT, 2" ID	16	1	MMVLR-11T	FUNNEL, WASTE REMOVAL
5	1	1961-817	VENTURI ASSY,2"	17	8	NNK8-32	NUT,KEP,8-32
6	2	26285A	FILTER,WASTE SYSTEM	18	2	SSFC98040	#10-32 X 5/8 FLAT ALLEN
7	1	4300090	MOUNT, WASTE FUNNEL	19	8	SSPS90064	8-32 X 1 PAN HD
8	1	4300244	BRKT, MTG, AIR JET	20	3	SSPS98024	10-32X3/8 PAN HD SLOT
9	1	4300245	JET, AIR, WASTE	21	3	SSSC98032	10-32X1/2, SOC CAP
10	1	MM189472	ELBOW, 2" SCH 40 PVC	22	2	WWFS10	WASHER, FLAT, #10, SAE
11	4	MM5415K19	CLAMP,HOSE,WORM TYPE 1-9/	23	6	WWL10	WASHER,LOCK,#10
12	1	MM610364	ADAPTOR, 2" PVC THR.M.				

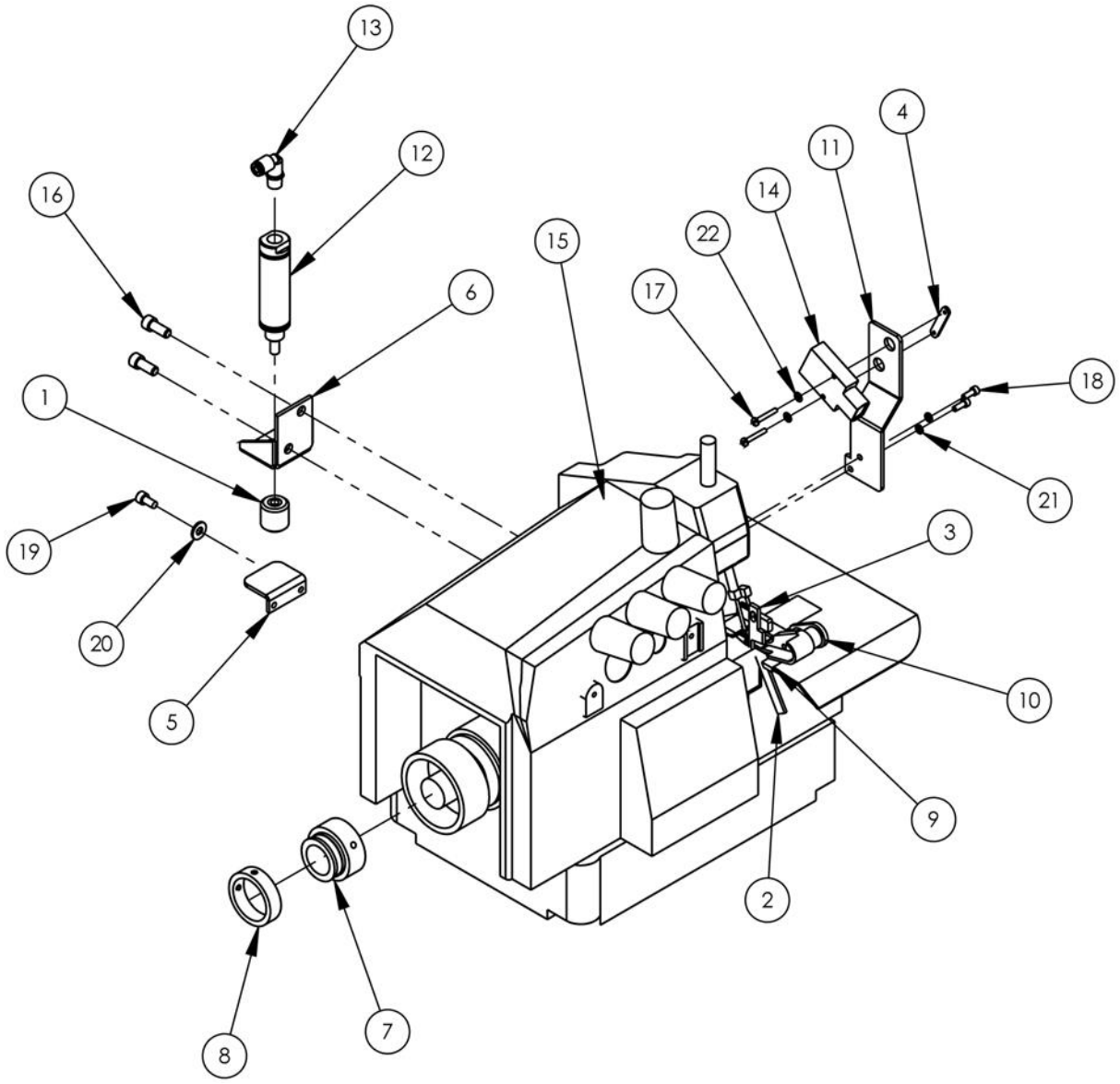

4300020 Left Sewing Head Assembly

AAC Drawing Number 4300020 Rev 0

NO.	QTY	PART #	DESCRIPTION	NO.	QTY	PART #	DESCRIPTION
1	1	11200T	BUMPER,1/4-28	12	1	AAC7S-1	CYLINDER,AIR,SA
2	2	1961-002	CUTTER,LOWER,LEFT HAND	13	1	AAQME-5-8	QUICK MALE ELBOW
3	2	1961-003C	CUTTER,UPPER,LEFT HAND	14	1	FFSM312LVQ	EYE,ELECTRIC,10-30VDC
4	1	1975-412A	PLATE,NUT,4-40,.95CTC	15	1	SPEGE32L450	SEWING HEAD,PEG,LH,SS,5X5
5	1	1976-020	TAB, FOOTLIFT	16	2	SSM3236136	1/4-40 X 9/16" SOC CAP
6	1	1976-057B	MOUNT, FOOTLIFT CYL.	17	2	SSPS70048	4-40 X 3/4 PAN HD SLOTTED
7	1	311-128	HUB, HANDWHEEL, TAPE MOUN	18	2	SSSC85024	6-40 X 3/8 SOC CAP SC
8	1	311-129	SLEEVE TAPE MOUNT ADJUST	19	1	SSSC98024	10-32 X 3/8 SOC CAP
9	1	4300226	PLATE,NEEDLE,MOD,LH,SS	20	1	WWFS10	WASHER, FLAT, #10, SAE
10	1	4300265	FOOT ASSY, LH HEAD	21	2	WWL6	WASHER,LOCK,#6
11	1	4300273	BRKT, MTG, HANDLE EYE	22	2	WWSI4	WASHER,INT. TOOTH

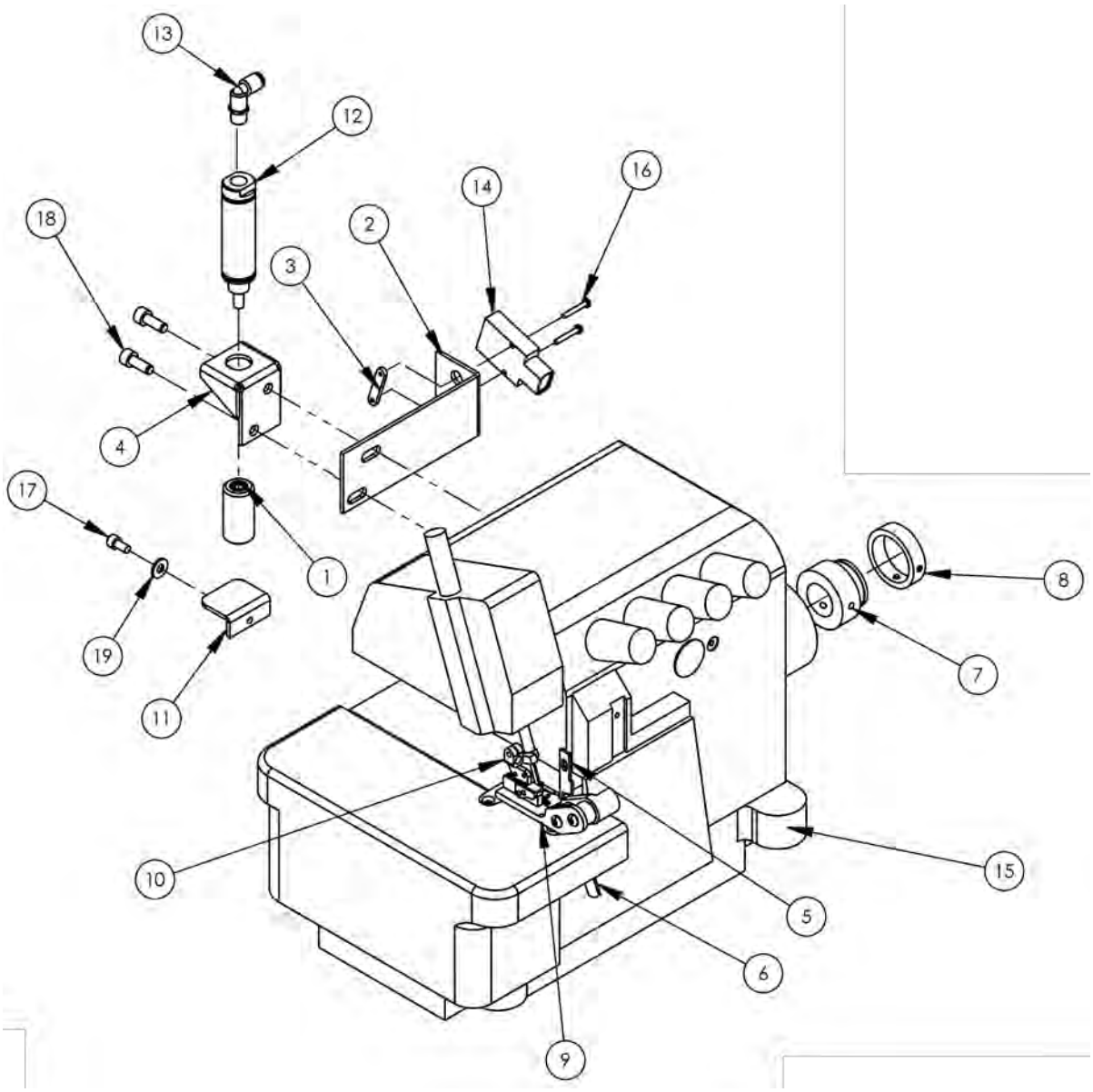

4300030 Right Sewing Head Assembly

AAC Drawing Number 4300030 Rev 1

NO.	QTY	PART #	DESCRIPTION	NO.	QTY	PART #	DESCRIPTION
1	1	11200F	BUMPER, 1/4-28 X 1-1/2L	11	1	4300322	TAB, FOOTLIFT
2	1	1962-424	EYE MOUNT, POS. 1 SENSOR	12	1	AAC7S-1	CYLINDER,AIR,SA
3	1	1975-412A	PLATE,NUT,4-40,.95CTC	13	1	AAQME-5-8	QUICK MALE ELBOW
4	1	1976-057b	MOUNT, FOOTLIFT CYL.	14	1	FFSM312LVQ	EYE,ELECTRIC,10-30VDC
5	1	277000	CUTTER,UPPER,WIDE,10MM	15	1	SPEGEX3216H	SEWING HEAD,PEGASUS,HD
6	1	277009	CUTTER,LOWER,10MM,EX52PEG	16	2	SSPS70048	4-40 X 3/4 PAN HD SLOTTED
7	1	311-128	HUB, HANDWHEEL, TAPE MOUN	17	1	SSSC98024	10-32 X 3/8 SOC CAP
8	1	311-129	SLEEVE TAPE MOUNT ADJUST	18	2	SSSCM6X16	M6X16 SOC CAP SCREW
9	1	4300266	FOOT ASSY, RH HEAD	19	1	WWFS10	WASHER, FLAT, #10, SAE
10	1	4300291	FOOT SHANK MOD., RH				

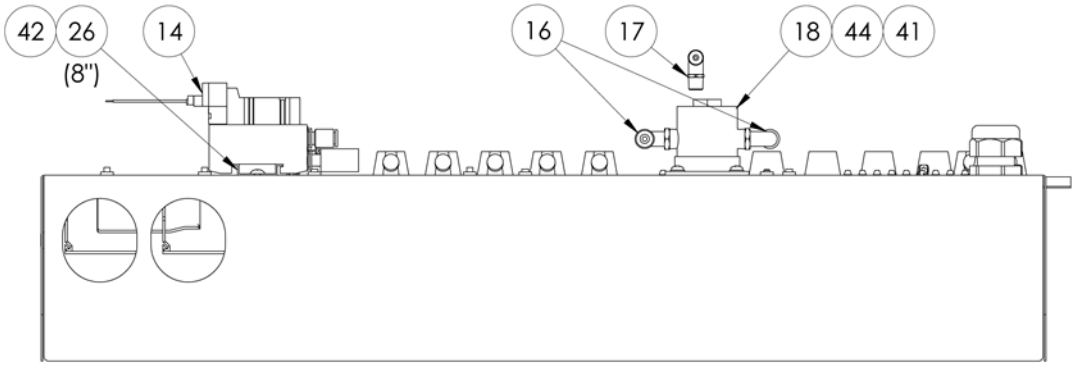

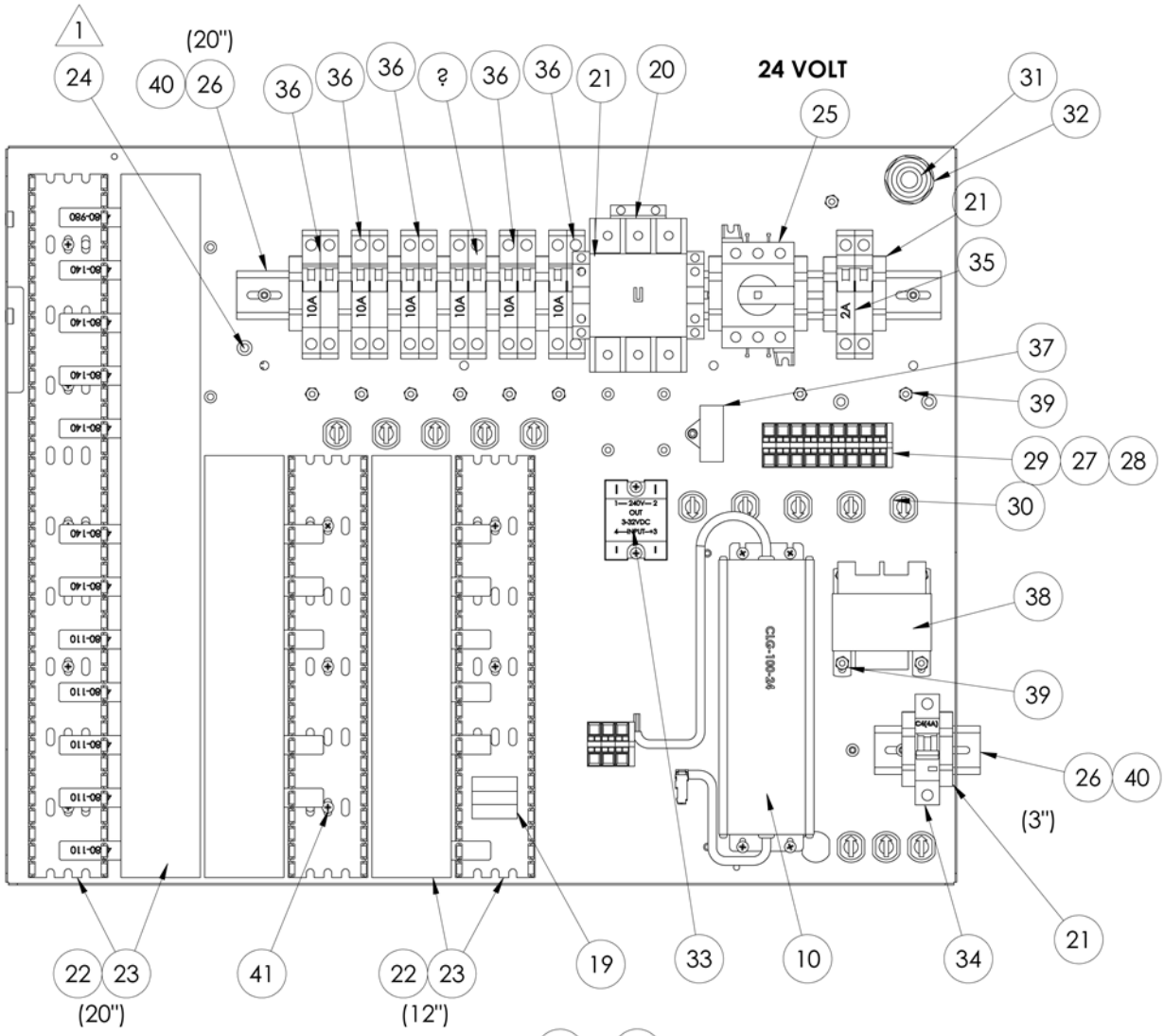

NOTE: SLOTS IN ITEM(S) (26) & (23) MUST BE SYMETRICAL TO CUT LENGTH(S)

4300035 Control Assembly

AAC Drawing Number 4300035 Rev 6

NO	QTY	PART #	DESCRIPTION
1	6	4080-110	MODULE,QUAD INPUT
2	2	4080-120	MODULE,DUAL OPTO-ISO
3	3	4080-130	MODULE,QUAD OPTO-ISO
4	7	4080-140	MODULE,QUAD OUTPUT
5	1	4080-150	MODULE,PROGRAM
6	1	4080-200	MODULE,AIR PRESSURE
7	1	4080-930	MODULE,DATA
8	1	4080-950	MODULE,POWER
9	1	4080-980	MODULE, ADAPTER
10	1	4080-990b	POWER SUPPLY, SBUS,
11	AR	4300-WD	DIAGRAM,WIRING
12	1	4300032	CONTROL PANEL
13	1	4300101	CABLE PACKAGE, 4300
14	1	AAE4300	SOLENIOD,ASSY,10 STATION
15	1	AAFP28	MUFFLER,1/4 NPT
16	2	AAQME-4-4	ELBOW, MALE,1/4X1/4NPT
17	1	AAQME-5-8	QUICK MALE ELBOW
18	1	AAV250A	PILOT VALVE
19	1	EE64151B	FERRITE CORE,SPLIT,CABLE
20	1	EECGC85A24	CONTACTOR,65A,24VAC
21	15	EECLIPFIX	ANCHOR,DIN RAIL
22	7.33	EEDC2X2	COVER,WIRE DUCT
23	7.33	EEDF2X2	DUCT,WIRE,2X2, MOD
24	*14	EEPBMSH25C	MOUNT,CABLE TIE,NYLON
25	1	EESD2080RR	DISCONNECT, 3 POLE, 80A, IEC
26	31"	EETS35X7.5A	DIN RAIL-AMERICAN
27	9	FF264-341	TERMBLK,WAGO,TOP,DUAL,GRY
28	3	FF264-347	TERMBLK,WAGO,TOP,DUAL,GRN
29	2	FF264-371	TERMBLK,WAGO,TOP,END
30	13	FF1724	STRAIN RELIEF
31	1	FF3460	STRAIN RELIEF,LIQ TIGHT
32	1	FF8465	NUT,LOCK,3/4NPT,NYLON,BLK
33	1	FFD2425F	RELAY,SSR,24VAC,25A
34	1	FFL741C	CIRCUIT BREAKER,THERM-MAG
35	1	FFQL213DMKM02	CIRCUIT BREAKER,2A,2P
36	6	FFQL213DMKM10	CIRCUIT BREAKER,10A,2P
37	1	FFRAV781BW	MODULE, TVS, 240 VAC
38	1	FFTX28/5A	TRANSFORMER,28V,4.6AMP
39	13	NNH8-32	HEX-NUT 8-32 REG.
40	6	SSBC98016	10-32 X 1/4 BUTTON CAP SC
41	32	SSPP90020	SCREW,PHP #8-32X5/16
42	2	SSPP98024	10-32 X 3/8 PAN HD PHILIP
43	1	SSSC90024	#8-32 X 3/8 SOC CAP SC
44	4	WWF8	WASHER, FLAT, #8

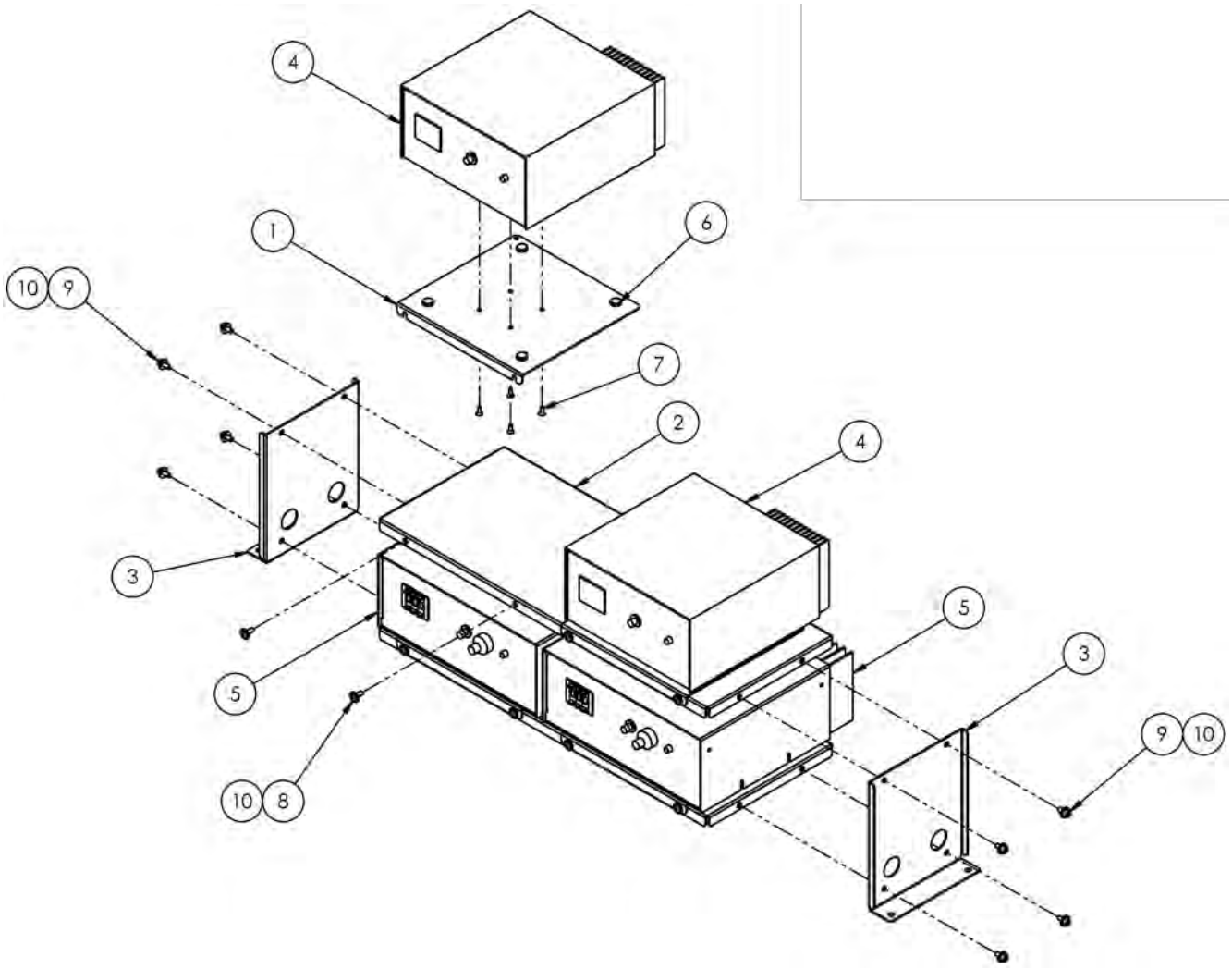

4300065 Stepper Box Assembly

AAC Drawing Number 4300065 Rev 0

NO.	QTY	PART #	DESCRIPTION
1	4	1335M-9010	BRKT, STEPPER BOX BASE
2	2	4300066	BOX, SHELF,STEPPER,DUAL
3	2	4300067	MOUNT,CONTROL BOX,SIDE
4	2	AP-28-600CC	CONT BOX,2 AMP MAX,SBUS
5	2	AP-28-800W	CONTROL BOX,STEPPER MTR
6	16	MMSLD-ECH	1/2" DIA RUBBER BUMPER
7	16	SSFC80024	6-32 X 3/8 FLAT CAP
8	8	SSPP98032	10-32 X 1/2 PAN PHIL
9	8	SSSC98024	10-32 X 3/8 SOC CAP
10	16	WWFS10	WASHER, FLAT, #10, SAE

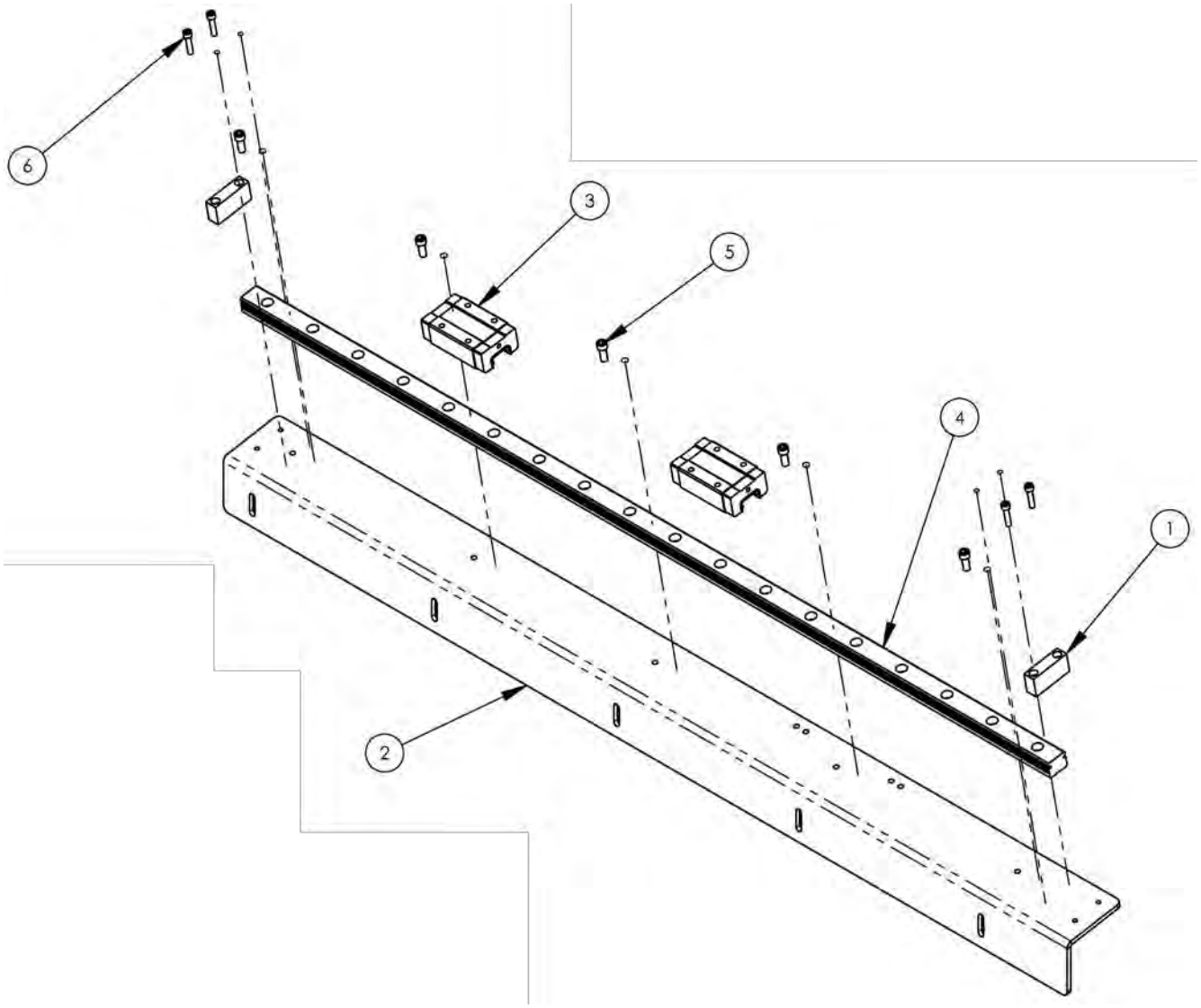

4300221 Insert Rail Assembly, 18”

AAC Drawing Number 4300221 Rev 0

NO.	QTY	PART #	DESCRIPTION
1	2	1356142	BLOCK, RAIL STOP
2	1	4300222	BRKT, MTG, LINEAR RAIL
3	2	MMAGH25CAN	LINEAR BEARING
4	1	MMAGR251070N	RAIL,LINEAR AG SERIES
5	5	SSSC01040	1/4-20 X 5/8" SOC CAP SC
6	4	SSSC98056	10-32 X 7/8 SOC CAP

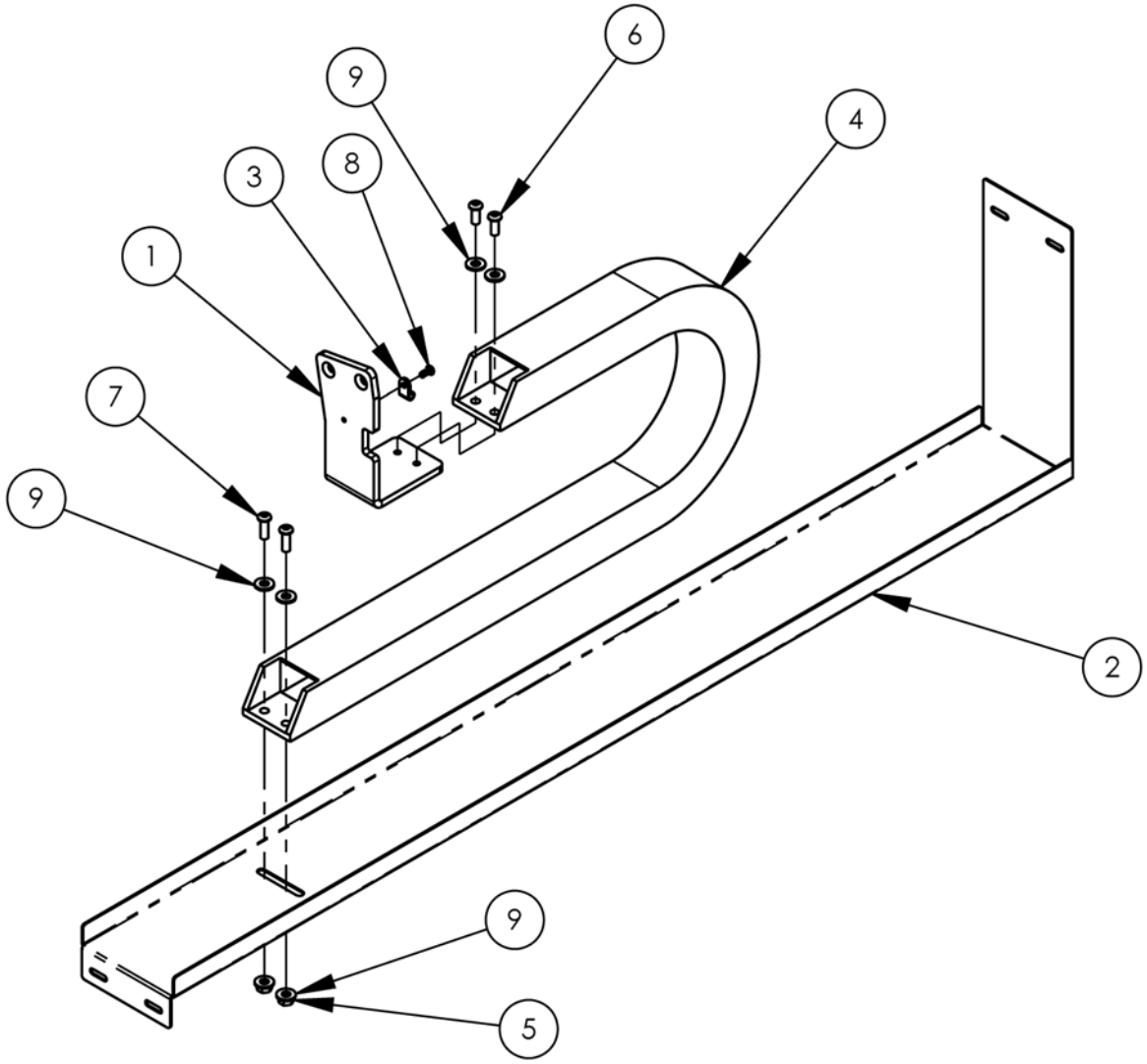

4300223 Cable Rack Assembly

AAC Drawing Number 4300223 Rev 0

NO.	QTY	PART #	DESCRIPTION
1	1	4300141	BRKT, MTG, CABLE TRACK
2	1	4300224	SUPPORT, CABLE TRACK,18"
3	1	AAF3/16	CLAMP, BLACK PLASTIC
4	1	MM45021-22	DUCT,WIRE PLASTITRAK
5	2	NNK1/4-20	NUT,HEX,KEP,1/4-20,W/LOCK
6	2	SSBC01040	1/4-20 X 3/4 BUT CAP SC
7	2	SSBC01048	SCREW,BUTTON CAP,1/4-20X3/4,SS
8	1	SSBC90020	8-32X3/8 BUTTON CAP
9	6	WWFS1/4	WASHER,FLAT,SAE,1/4

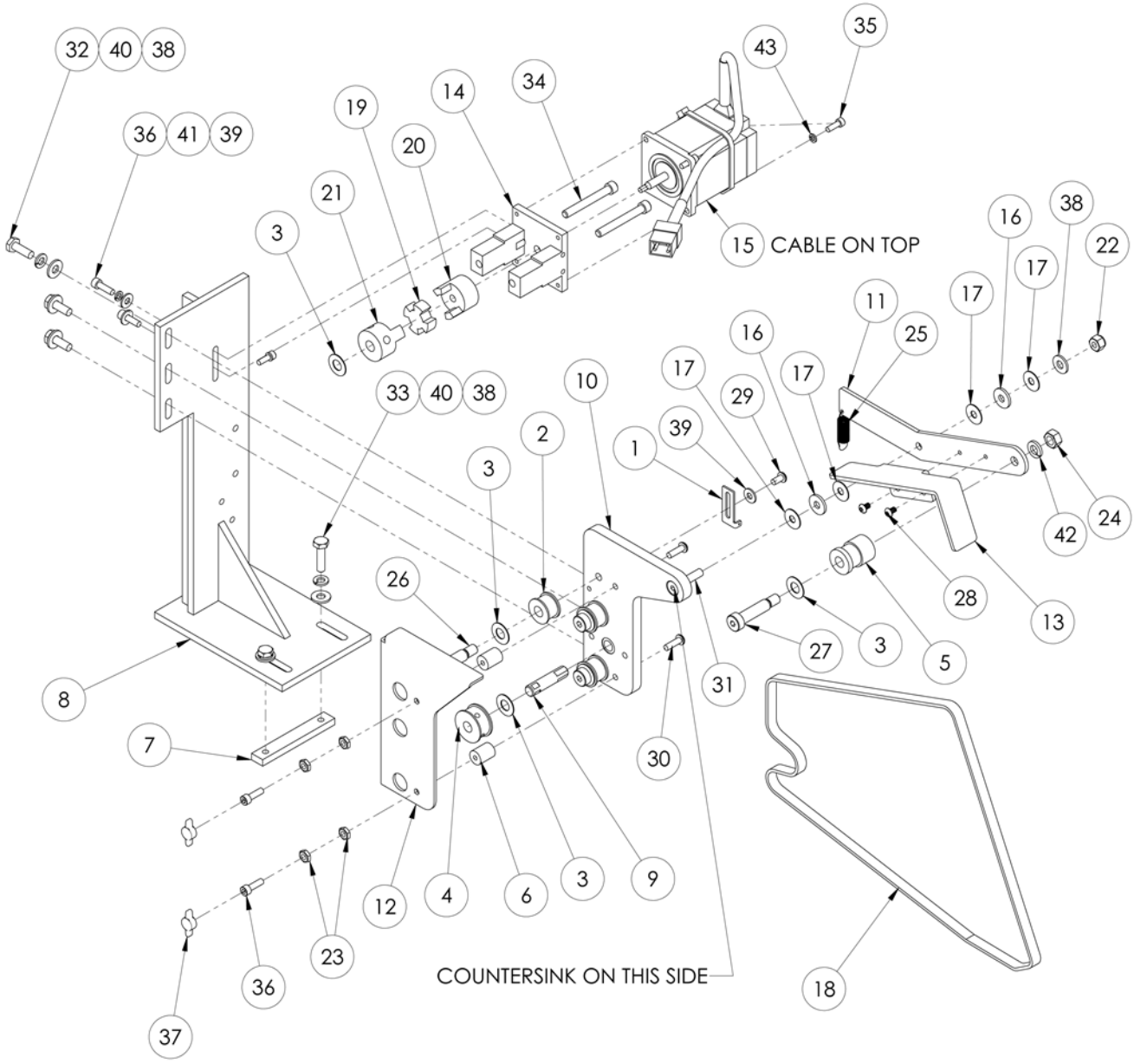
CABLE ON TOP
COUNTERSINK ON THIS SIDE

4300270 TOP BELT FEED ASSY. RIGHT

AAC Drawing Number 4300270 Rev 0

NO	QTY	PART #	DESCRIPTION
1	1	1325-39C	SPRING CLIP
2	3	1342Z-201	ROLLER,DELRIN,TOP BELT FD
3	6	3517	WASHER,THRUST,BRONZE
4	1	3554-2A	PULLEY,GEAR,1/5 PITCH
5	1	49023	ROLLER,FRONT
6	2	49038	BELT COVER SPACER
7	1	4300024	PLATE,NUT 1/4-20,2.50 CTC
8	1	4300049	MOUNT, TOP CONVEYOR,RH
9	1	4300249	SHAFT, CONV, DRIVE
10	1	4300264	SUPPORT, BELT FEED, RH
11	1	4300268	ARM, BELT TENSION
12	1	4300271	COVER, BELT, RH
13	1	4300315	GUARD, TOP BELT, RH
14	1	AP-22E-101	MOTOR BRACKET
15	1	AP-22E-103	STEP MOTOR, 2 AMP
16	2	BBNTA411	BEARING,THRUST,.250B
17	4	BBTRA411	WASHER,THRUST,STEEL
18	1	GG356XL037U	BELT,GEAR,KEVLAR CORE,URE
19	1	MML050	SPIDER, COUPLING
20	1	MML050-250	COUPLING,1/4 BORE
21	1	MML050-375	COUPLING,3/8 BORE
22	1	NNE1/4-20	NUT,ELASTIC LOCK,1/4-20
23	4	NNH10-32	HEX-NUT 10-32 REG.
24	1	NNH5/16-18	NUT,HEX, 5/16-18
25	1	RRE29C	SPRING,EXT .020X.19X1.5
26	3	ssas024040	SCREW,ALLEN,SHOULDER
27	1	SSAS024080	SHULDER BOLT 3/8 X 1.25L
28	2	SSBC90016	8-32 X 1/4 BUTTON CAP
29	1	SSBC98024	10-32 X 3/8 BUTTON CAP SC
30	2	SSBC98040	10-32 X 5/8 BUTTON CAP SC
31	1	SSFC01080	1/4-20 X 1-1/4 FLAT CAP
32	3	SSHC01048	1/4-20 X 3/4 HEX CAP
33	2	SSHC01064	1/4-20 X 1 HHCS
34	2	SSSC01128	1/4-20 X 2 SOC CAP
35	5	SSSC90032	#8-32 X 1/2 SOC CAP SC
36	4	SSSC98040	10-32 X 5/8 SOC CAP
37	2	SSW#10	WING SCREW KNOB
38	6	WWFS1/4	WASHER,FLAT,SAE,1/4
39	3	WWFS10	WASHER, FLAT, #10, SAE
40	5	WWL1/4	WASHER,LOCK, 1/4
41	2	WWL10	WASHER,LOCK,#10
42	1	WWL5/16	WASHER,LOCK, 5/16
43	5	WWL8	WASHER,LOCK,#8

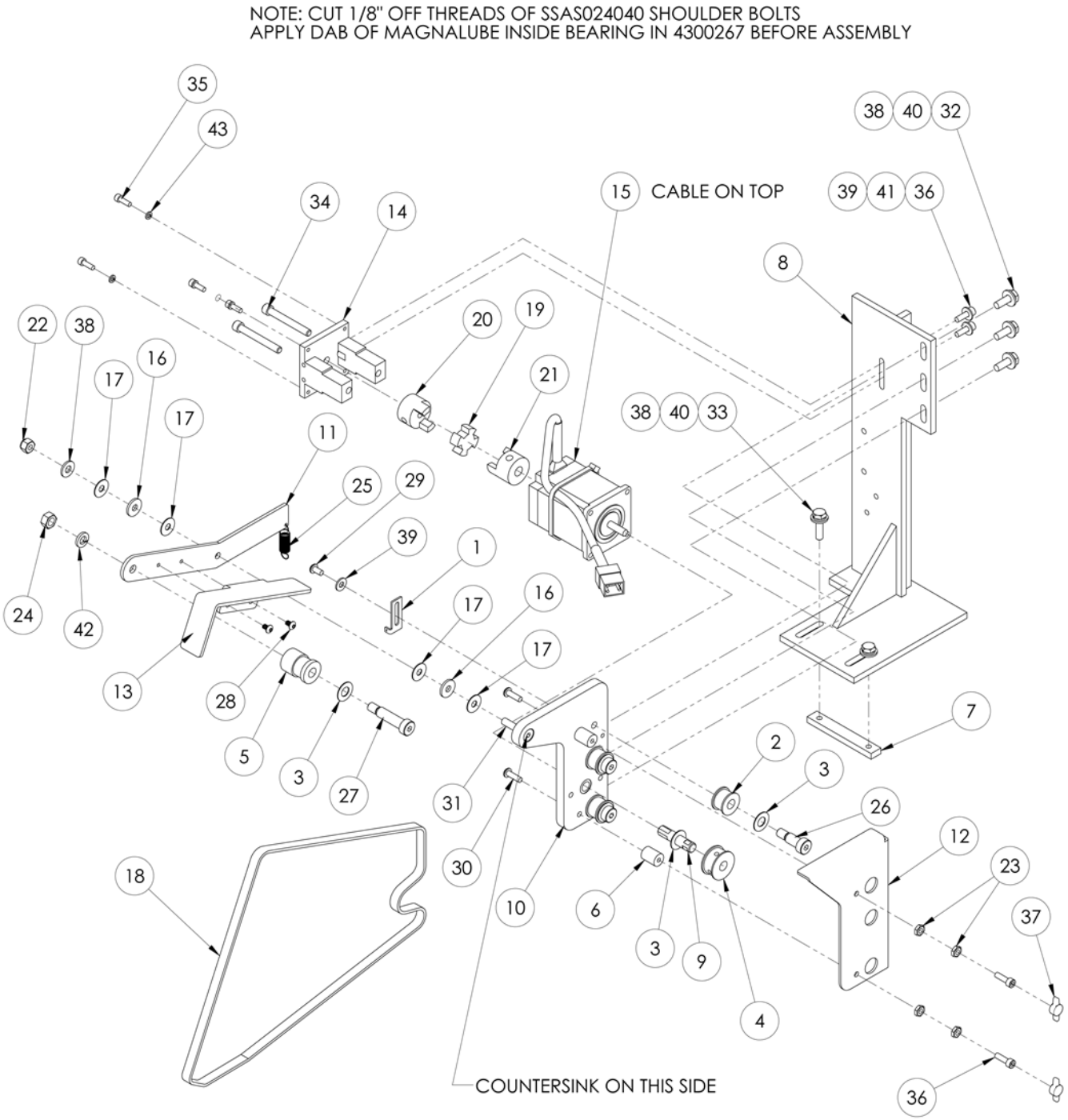
NOTE: CUT 1/8" OFF THREADS OF SSAS024040 SHOULDER BOLTS
APPLY DAB OF MAGNALUBE INSIDE BEARING IN 4300267 BEFORE ASSEMBLY
CABLE ON TOP
COUNTERSINK ON THIS SIDE

4300280 TOP BELT FEED ASSY., LEFT

AAC Drawing Number 433280 Rev 0

NO	QTY	PART #	DESCRIPTION
1	1	1325-39G	SPRING CLIP
2	3	1342Z-201	ROLLER,DELRIN,TOP BELT FD
3	6	3517	WASHER,THRUST,BRONZE
4	1	3554-2A	PULLEY,GEAR,1/5 PITCH
5	1	49023	ROLLER,FRONT
6	2	49038	BELT COVER SPACER
7	1	4300024	PLATE,NUT 1/4-20,2.50 CTC
8	1	4300050	MOUNT, TOP CONVEYOR,LH
9	1	4300249	SHAFT, CONV, DRIVE
10	1	4300267	SUPPORT, BELT FEED, LH
11	1	4300268	ARM, BELT TENSION
12	1	4300272	COVER, BELT, LH
13	1	4300316	GUARD, TOP BELT, LH
14	1	AP-22E-101	MOTOR BRACKET
15	1	AP-22E-103	STEP MOTOR, 2 AMP
16	2	BBNTA411	BEARING,THRUST,.250B
17	4	BBTRA411	WASHER,THRUST,STEEL
18	1	GG356XL037U	BELT,GEAR,KEVLAR CORE,URE
19	1	MML050	SPIDER, COUPLING
20	1	MML050-250	COUPLING,1/4 BORE
21	1	MML050-375	COUPLING,3/8 BORE
22	1	NNE1/4-20	NUT,ELASTIC LOCK,1/4-20
23	4	NNH10-32	HEX-NUT 10-32 REG.
24	1	NNH5/16-18	NUT,HEX, 5/16-18
25	1	RRE29C	SPRING,EXT .020X.19X1.5
26	3	ssas024040	SCREW,ALLEN,SHOULDER
27	1	SSAS024080	SHULDER BOLT 3/8 X 1.25L
28	2	SSBC90016	8-32 X 1/4 BUTTON CAP
29	1	SSBC98024	10-32 X 3/8 BUTTON CAP SC
30	2	SSBC98040	10-32 X 5/8 BUTTON CAP SC
31	1	SSFC01080	1/4-20 X 1-1/4 FLAT CAP
32	3	SSHC01048	1/4-20 X 3/4 HEX CAP
33	2	SSHC01064	1/4-20 X 1 HHCS
34	2	SSSC01128	1/4-20 X 2 SOC CAP
35	4	SSSC90032	#8-32 X 1/2 SOC CAP SC
36	4	SSSC98040	10-32 X 5/8 SOC CAP
37	2	SSW#10	WING SCREW KNOB
38	6	WWFS1/4	WASHER,FLAT,SAE,1/4
39	3	WWFS10	WASHER, FLAT, #10, SAE
40	5	WWL1/4	WASHER,LOCK, 1/4
41	2	WWL10	WASHER,LOCK,#10
42	1	WWL5/16	WASHER,LOCK, 5/16
43	4	WWL8	WASHER,LOCK,#8

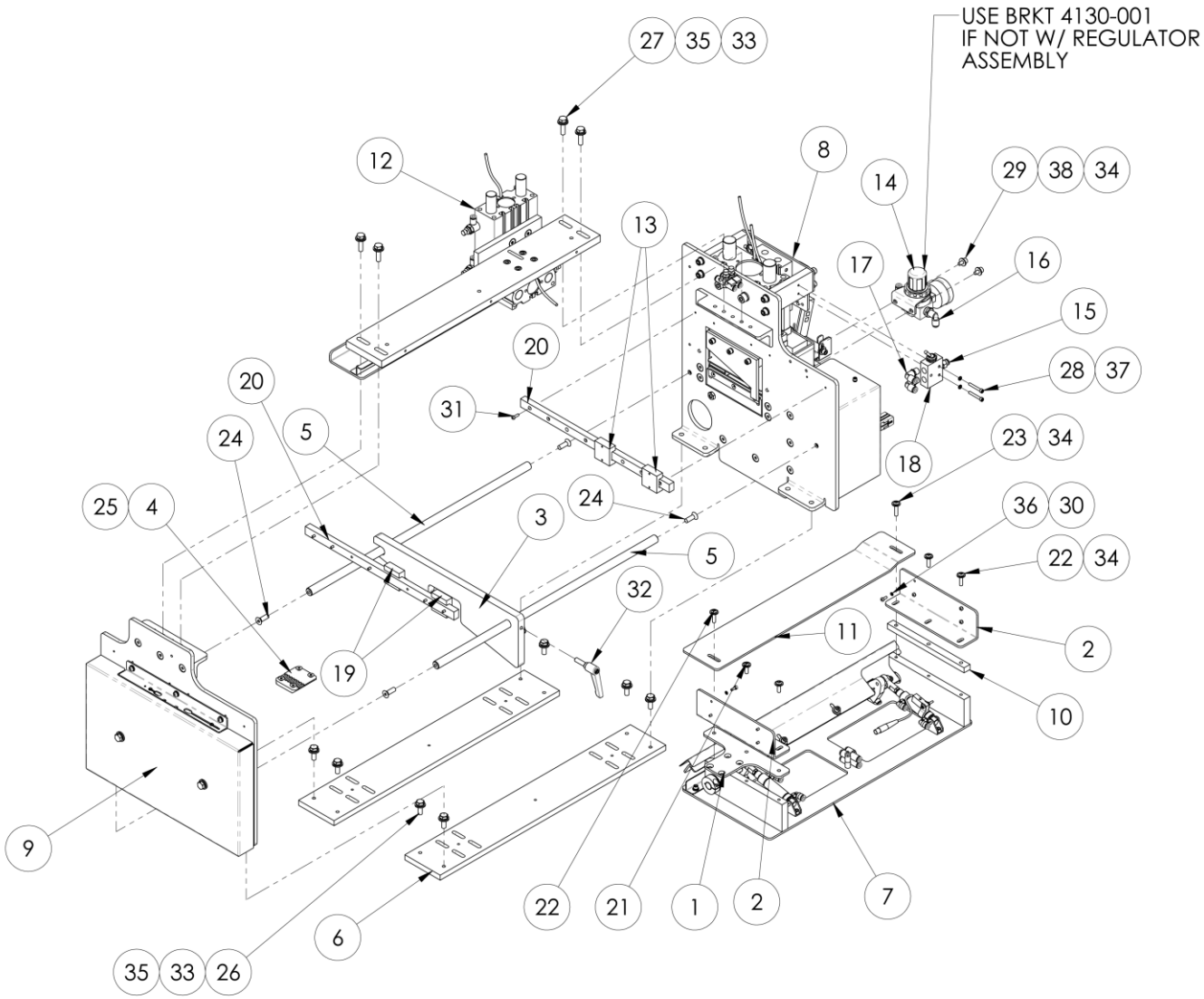
USE BRKT 4130-001
IF NOT W/ REGULATOR
ASSEMBLY
27
35
33
12
8
14
29
38
34
13
17
16
15
20
28
37
20
31
5
24
23
34
18
25
4
24
3
36
30
5
22
34
32
11
2
19
10
9
22
21
1
2
7
6
35
33
26

4300490 HANDLE CUT INSERT 18”

AAC Drawing Number 4300490 Rev 1

NO	QTY	PART #	DESCRIPTION
1	1	4300069	PLATE, DRIVE
2	2	4300071	BRKT, SUPPORT, INSERT
3	1	4300076	GUIDE, EDGE, BORDER
4	1	4300115	CLAMP, BELT
5	2	4300227	ROD, BORDER SUPPORT
6	2	4300228	BAR, BEARING SUPPORT
7	1	4300240	HANDLE CLAMP ASSY, 18"
8	1	4300415	FEED AND CUT ASSY
9	1	4300420	HANDLE INSERT DRIVE ASSY
10	1	4300442	SPACER, HANDLE CLAMP ASSY
11	1	4300443	GUARD, HANDLE LOAD
12	1	4300465	HANDLE GUIDE ASSY, 18"
13	2	4300502	BLOCK,BEARING,PVC
14	1	AAMSR20008	REG,0-140 W/GAUGE& BRKT
15	1	AAQMC-5-8	QU. MALE CONN 5/32X1/8
16	2	AAQME-5-4	ELBOW, MALE 5/32X1/4NPT
17	2	AAQME-5-8	QUICK MALE ELBOW
18	1	AAV41V	VALVE,TOGGLE
19	2	MMLC15C1	BLOCK,BEARING,15MM
20	2	MMLWL15R320	RAIL,LINEAR,15MM X 320MM
21	2	SSBC98040	10-32 X 5/8 BUTTON CAP SC
22	3	SSBC98048	10-32 X 3/4 BUTTON CAP SC
23	1	SSBC98056	10-32 X 7/8 BUTTON CAP SC
24	4	SSFC01048	1/4-20 X 3/4 FLAT CAP
25	4	SSFC98024	#10-32 X .375 FLAT CAP
26	8	SSHC01048	1/4-20 X 3/4 HEX CAP
27	4	SSHC01064	1/4-20 X 1 HHCS
28	2	SSSC80064	6-32 X 1 SOC CAP SC
29	2	SSSC98024	10-32 X 3/8 SOC CAP
30	8	SSSCM3X8	M3-0.5X8 ,SOCKET CAP
31	12	SSSCM3X10	M3-0.5X10, SOCKET CAP
32	1	TTH32415	HANDLE,THDED,1/4-20X7/8
33	12	WWFS1/4	WASHER,FLAT,SAE,1/4
34	8	WWFS10	WASHER, FLAT, #10, SAE
35	12	WWL1/4	WASHER,LOCK, 1/4
36	8	WWL4	WASHER,LOCK,#4
37	2	WWL6	WASHER,LOCK,#6
38	2	WWL10	WASHER,LOCK,#10

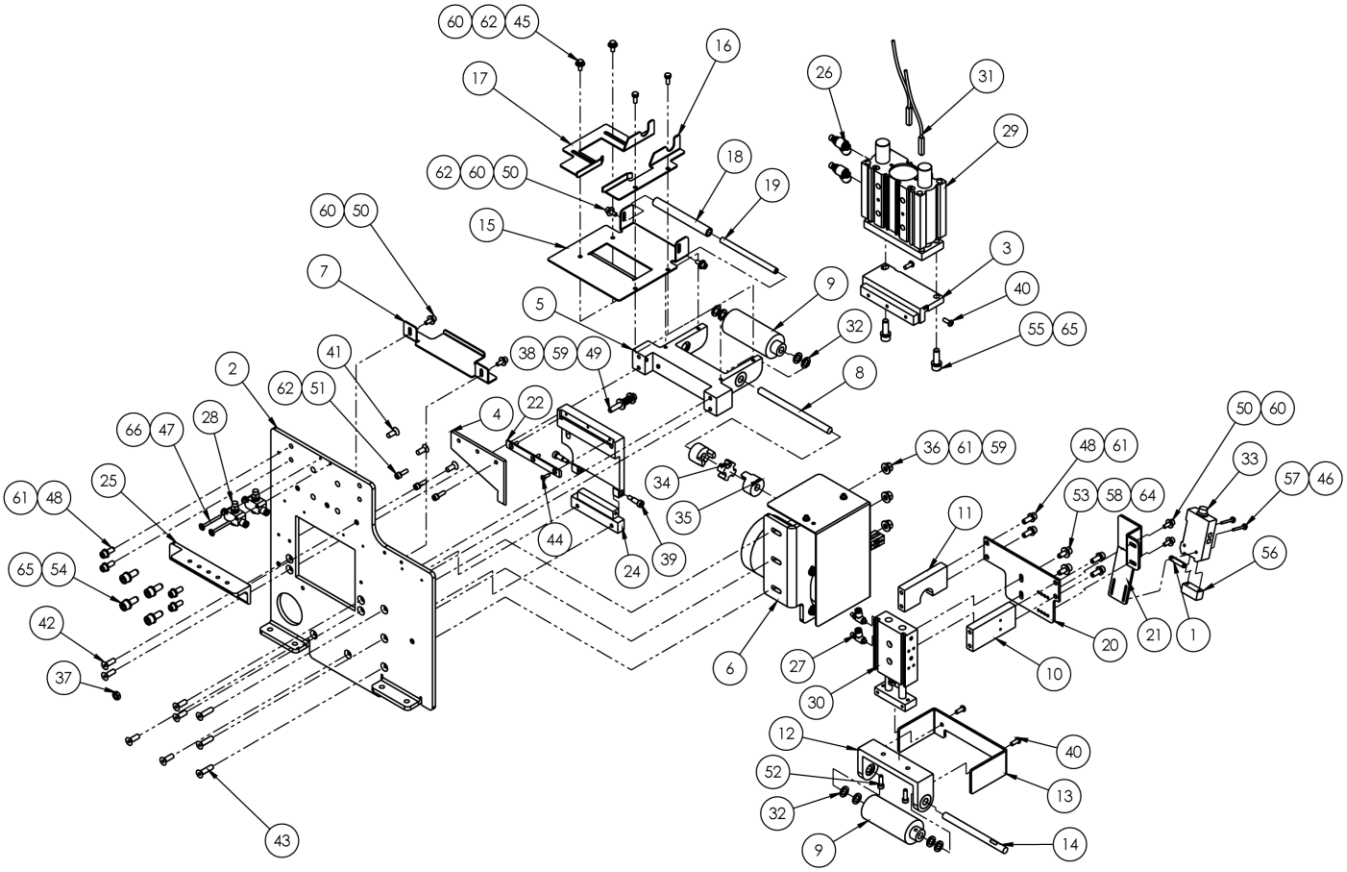
60 62 45
16
17
26
31
29
18
62 60 50
19
60 50
15
3
7
9
40
5
32
55 65
41
38 59 49
2
62 51
8
4
22
66 47
28
50 60
36 61 59
48 61
33
25
34
53 58 64
57 46
61 48
35
11
56
65 54
44
24
39
20
21
1
42
6
27
10
37
30
12
40
52
13
32
9
14
43

4300415 FEED AND CUT ASSY.

AAC Drawing Number 4300415 Rev 0

NO	QTY	PART #	DESCRIPTION	NO	QTY	PART #	DESCRIPTION
1	1	1975-412A	PLATE,NUT,4-40,.95CTC	34	1	MML050	SPIDER, COUPLING
2	1	4300399	PLATE, MTG, FEED & CUT	35	2	MML050-375	COUPLING,3/8 BORE
3	1	4300402	BLOCK, UPPER CUTTER	36	3	NNH1/4-20	NUT,HEX,1/4-20
4	1	4300403	CUTTER, UPPER	37	1	NNJ1/4-20	NUT, HEX, JAM, 1/4-20
5	1	4300404	YOKE, BOTTOM ROLLER	38	1	RRLC045F3	SPRING,COMP .042X.42X.75
6	1	4300405	PULLER DRIVE ASSY	39	2	SSAS016032	SHOULDER BOLT 1/4 X 3/8L
7	1	4300406	PLATE, GUIDE, HANDLE	40	4	SSBC98032	10-32 X 1/2 BUTTON CAP SC
8	1	4300407	SHAFT, DRIVE, PULLER	41	3	SSFC01040	1/4-20 X 5/8 FLAT ALN CAP
9	2	4300408	ROLLER, FEED	42	6	SSFC01048	1/4-20 X 3/4 FLAT CAP
10	1	4300409	STANDOFF,PULLER CYLINDER	43	3	SSFC01064	1/4-20 X 1 FLAT CAP
11	1	4300411	STANDOFF,PULLER CYLINDER	44	3	SSFC80032	6-32 X 1/2 FLAT CAP
12	1	4300412	YOKE, UPPER ROLLER	45	4	SSHC98032	10-32X1/2 HEX HD
13	1	4300413	GUARD, HANDLE KNIFE	46	2	SSPS70064	4-40 X 1 PAN HD SLOTTED
14	1	4300414	SHAFT, IDLER, PULLER	47	2	SSPS70080	#4-40 X 1-1/4 PAN HD SLTD
15	1	4300416	PLATE, MTG, GUIDE	48	8	SSSC01040	1/4-20 X 5/8" SOC CAP SC
16	1	4300417	GUIDE, HANDLE, LEFT	49	1	SSSC01112	1/4-20 X 1-3/4 SOC CAP
17	1	4300418	GUIDE, HANDLE, RIGHT	50	6	SSSC98032	10-32X1/2, SOC CAP
18	1	4300419	ROLLER, GUIDE, HANDLE	51	3	SSSC98040	10-32 X 5/8 SOC CAP
19	1	4300421	SHAFT, ROLLER, GUIDE	52	2	SSSCM5X16	M5-0.8 X 16,SOC CAP SCR
20	1	4300423	PLATE,PULLER CYLINDER	53	2	SSSCM6X16	M6 X 16, SOC CAP
21	1	4300424	MOUNT, EYE, HANDLE	54	4	SSSCM8X20	M8X20 SOC CAP
22	1	4300426	CUTTER, BOTTOM	55	2	SSSCM8X25	SCREW,SOC CAP,M8X25
23	1	4300427	PLATE, HINGE, LOWER KNIFE	56	1	V8	LENS,.5 CONV
24	1	4300429	MOUNT, HINGE PLATE	57	2	WWF4	WASHER, FLAT, #4
25	1	4300436	MOUNT, UPPER BRACE, RIGHT	58	2	WWFM6.1	WASHER, FLAT, M6, SAE
26	2	AA198RA408U	FLOW CONTROL,RC 1/8X1/4	59	5	WWFS1/4	WASHER,FLAT,SAE,1/4
27	2	AA198RA510	FL CONT,5/32X10-32	60	8	WWFS10	WASHER, FLAT, #10, SAE
28	2	AA2000F-03	FLOW CONTROL,IN-LINE,5/32	61	11	WWL1/4	WASHER,LOCK, 1/4
29	1	AACMGPM4040	CYLINDER,AIR,DUAL ROD	62	2	WWL4	WASHER,LOCK,#4
30	1	AACXSM2020	CYLINDER,AIR,DUAL ROD	63	13	WWL10	WASHER,LOCK,#10
31	2	AAEDY59A-3M	SENSOR W/ PLUG	64	2	WWLM6	WASHER,LOCK,M6
32	8	BBTT604	BEARING,BRONZE,.385ID	65	6	WWLM8	M8 LOCK WASHER
33	1	FFSE3WLC	EYE,SMARTEYE,MARK III				

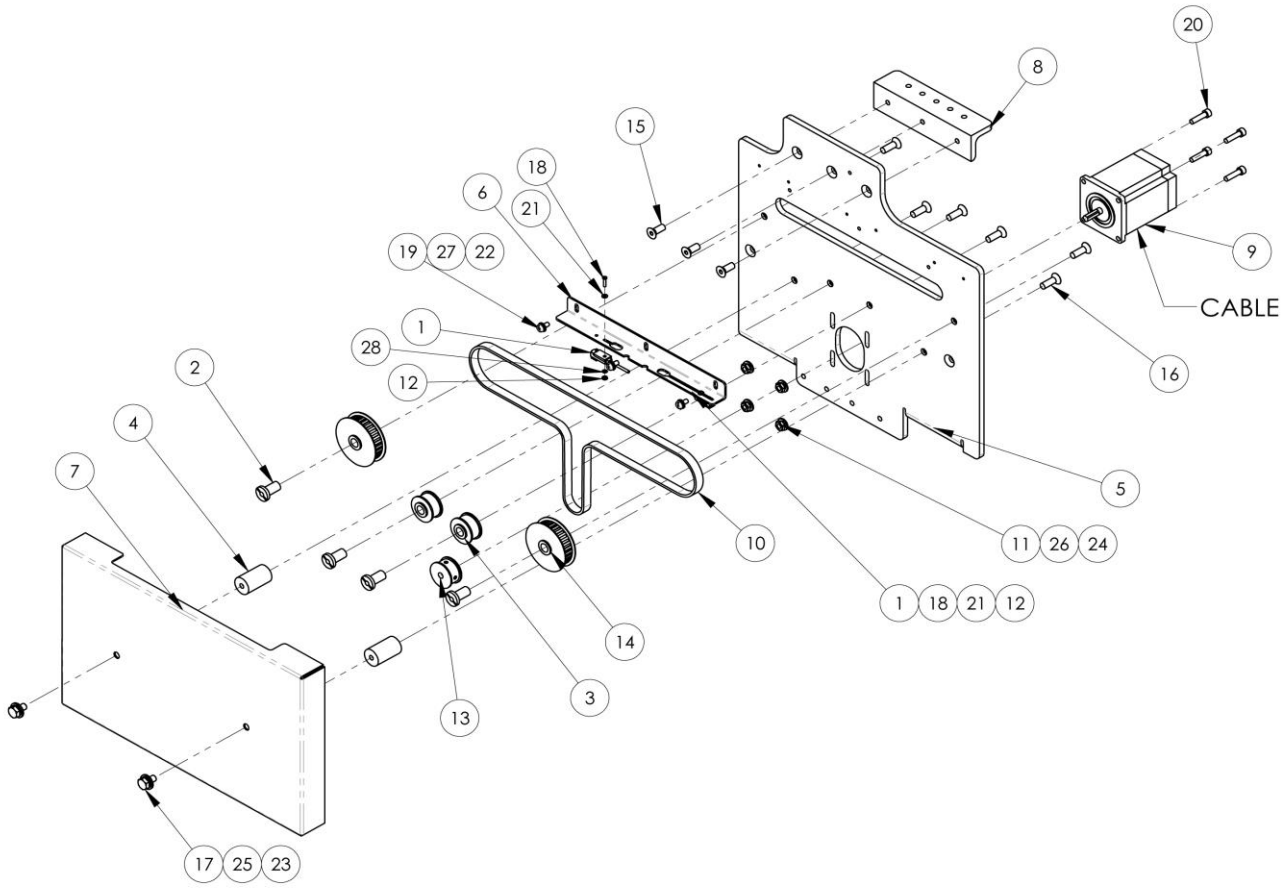

4300420 HANDLE INSERT DRIVE ASSY

AAC Drawing Number 4300420 Rev 0

NO	QTY	PART #	DESCRIPTION	NO	QTY	PART #	DESCRIPTION
1	2	1278-7055A	PROX SWITCH W/PLUG	15	3	SSFC01040	1/4-20 X 5/8 FLAT ALN
2	4	4300116	STUD, IDLER PULLEY	16	6	SSFC01048	1/4-20 X 3/4 FLAT CAP
3	2	4300117	PULLEY, IDLER	17	2	SSHC01032	1/4-20 X 1/2 HHCS
4	2	4300122	STAND-OFF, BELT GUARD	18	2	SSPS50032	SCREW,2-56 x 1/2
5	1	4300425	PLATE, MTG, SIDE	19	3	SSPS90024	#8-32 X 3/8 LG PAN HD
6	1	4300432	BRKT, MTG, SENSOR	20	4	SSSC98048	10-32 X 3/4 SOC CAP
7	1	4300433	GUARD, BELT	21	2	WWF2	WASHER, FLAT, #2
8	1	4300435	MOUNT, UPPER BRACE, LEFT	22	3	WWF8	WASHER, FLAT, #8
9	1	AP-22E-103	STEP MOTOR, 2 AMP	23	2	WWFS1/4	WASHER,FLAT,SAE,1/4
10	1	GG330XL037	BELT,GEAR,1/5P,3/8W	24	4	WWFS10	WASHER, FLAT, #10, SAE
11	4	NNH10-32	HEX-NUT 10-32 REG.	25	2	WWL1/4	WASHER,LOCK, 1/4
12	2	NNH2-56	NUT,HEX,2-56	26	4	WWL10	WASHER,LOCK,#10
13	1	PP16XL037M	PULLEY,GEAR,1/5P,16T,1/4B	27	3	WWL8	WASHER,LOCK,#8
14	2	PP30XLB03738M2	PULLEY,GEAR,1/5,P,30T,3/8	28	2	WWSI2	WASHER,INTERNAL

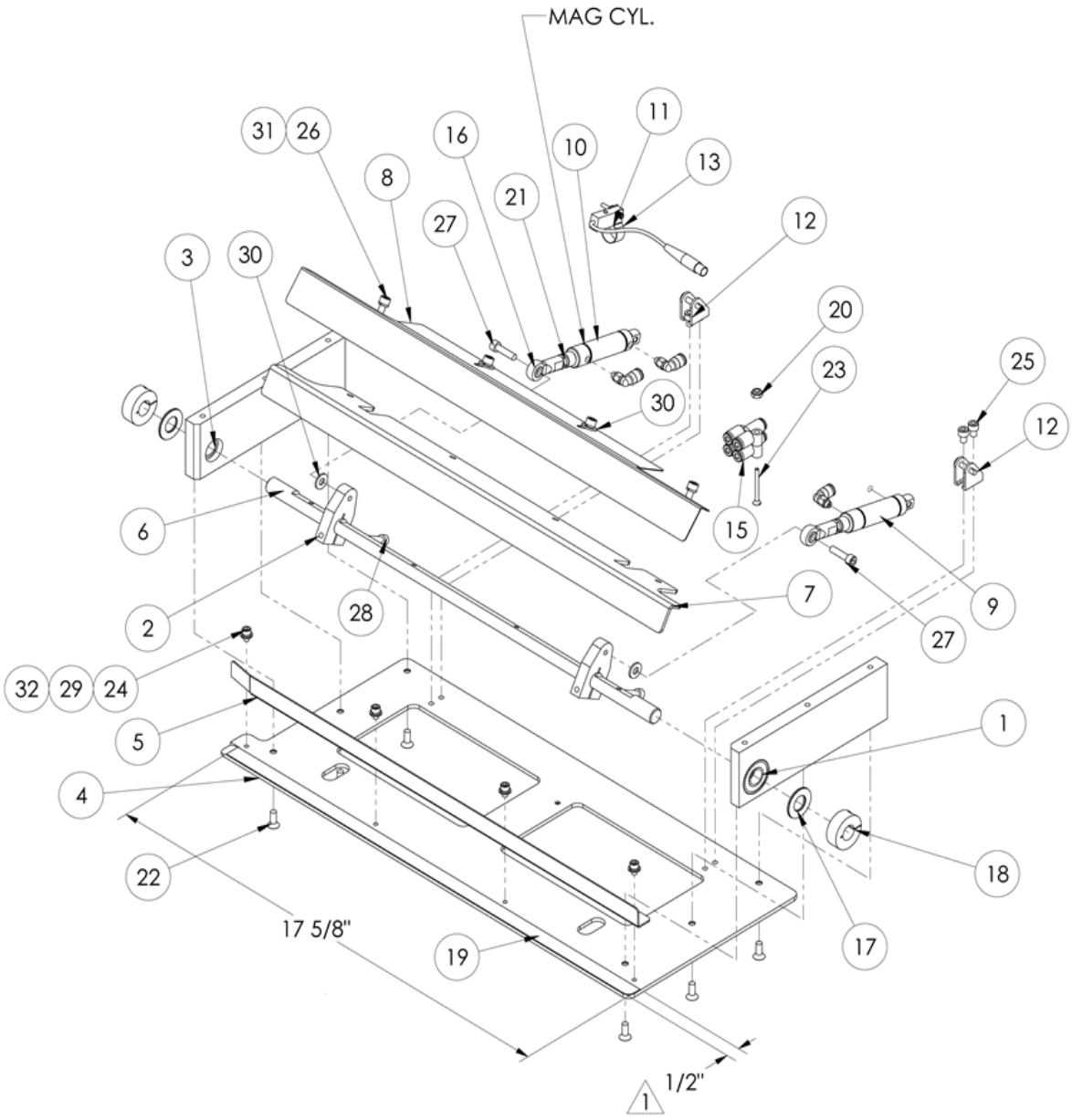
MAG CYL.
31
26
8
16
10
11
13
21
27
12
3
30
20
23
25
30
12
6
15
9
28
7
27
2
32
29
24
5
1
4
18
22
17 5/8"
19
17
1/2"
1

4300240 Handle Clamp Assembly, 18”

AAC Drawing Number 4300240 Rev 0

NO	QTY	PART #	DESCRIPTION
1	1	4300057	SPACER, PIVOT, RIGHT
2	2	4300061	LEVER, PIVOT, CLAMP
3	1	4300068	SPACER, PIVOT, LEFT
4	1	4300234	PLATE, MTG, MAIN
5	1	4300236	GUIDE, HANDLE
6	1	4300237	SHAFT, PIVOT, CLAMP
7	1	4300238	PLATE, CLAMP
8	1	4300239	FINGER, HANDLE CLAMP
9	1	AAC8DP-.5	CYL,AIR,DA,9/16 B,1/2S
10	1	AAC8DP-.5M	CYL,AIR,DA,9/16 B,1/2S, W/MAG
11	1	AAEHSKQ	SWITCH,HALL EFFECT(SMC)
12	2	AAFBP-8C	BRKT,PIVOT,5/32 BORE
13	1	AAFD35000	BAND,UNIVERSAL,AAEHSKQ
14	4	AAQME-5-10	AIR ELBOW, 10-32 X 5/32
15	2	AAQUY-5-5	QUICK UNION Y, 5/32
16	2	BBAW-3Z	BRG,ROD END,F, 10-32
17	2	BBTT1001	WASHER,THRUST,BRONZE
18	2	CCCL8F	CLAMP COLLAR- 1/2
19	18	EEFE-RR2	TAPE,REFLECTIVE,1" WIDE
20	1	NNE6-32	NUT,ELASTIC LOCK,6-32
21	2	NNJ10-32	NUT,JAM,THIN #10-32
22	6	SSFC98032	10-32 X 1/2 FLAT ALLEN CAP
23	1	SSFS80080	#6-32 X 1-1/4, FLAT SLOT
24	4	SSSC90016	#8-32 X 1/4 SOC CAP SC
25	4	SSSC98016	10-32 X 1/4 SOC CAP
26	4	SSSC98032	10-32X1/2, SOC CAP
27	2	SSSC98048	10-32 X 3/4 SOC CAP
28	2	SSSC98064	10-32 X 1 SOC CAP
29	4	WWF8	WASHER, FLAT, #8
30	4	WWFS10	WASHER, FLAT, #10, SAE
31	4	WWL10	WASHER,LOCK,#10
32	4	WWL8	WASHER,LOCK,#8

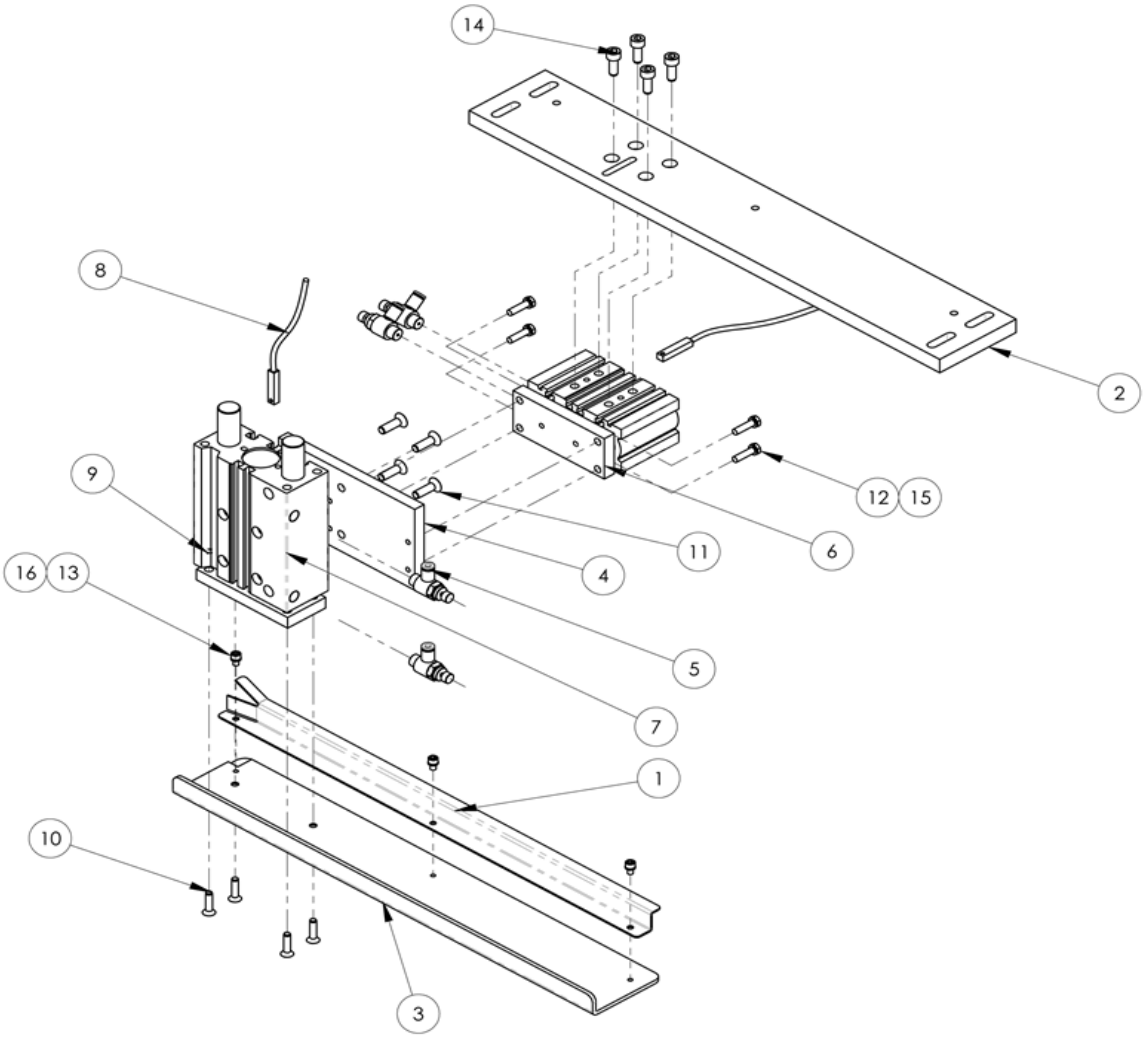

4300465 Handle Guide Assembly, 18”

AAC Drawing Number 4300465 Rev 1

NO	QT	PART #	DESCRIPTION	NO	QTY	PART #	DESCRIPTION
1	1	4300233	GUIDE, HANDLE	9	4	NNK10-32	KEP NUT, 10-32
2	1	4300430	BRACE, SUPPORT, UPPER	10	4	SSFC98048	#10-32 X .75 SHCSF
3	1	4300459	PLATE, CLAMP, LOWER	11	4	SSFCM6X20	M6 X 20 FLAT ALLEN
4	1	4300461	PLATE, COUPLER,	12	4	SSHC98048	SCREW, HEX CAP #10-
5	4	AA198-2201	FLOW	13	3	SSSC90016	#8-32 X 1/4 SOC CAP SC
6	1	AACMGPM252	CYLINDER,AIR,DUAL ROD	14	4	SSSCM6X16	M6 X 16, SOC CAP
7	1	AACMGPM257	CYLINDER,AIR,DUAL ROD	15	4	WWL10	WASHER,LOCK,#10
8	2	AAEDY59A-3M	SENSOR W/ PLUG	16	3	WWL8	WASHER,LOCK,#8

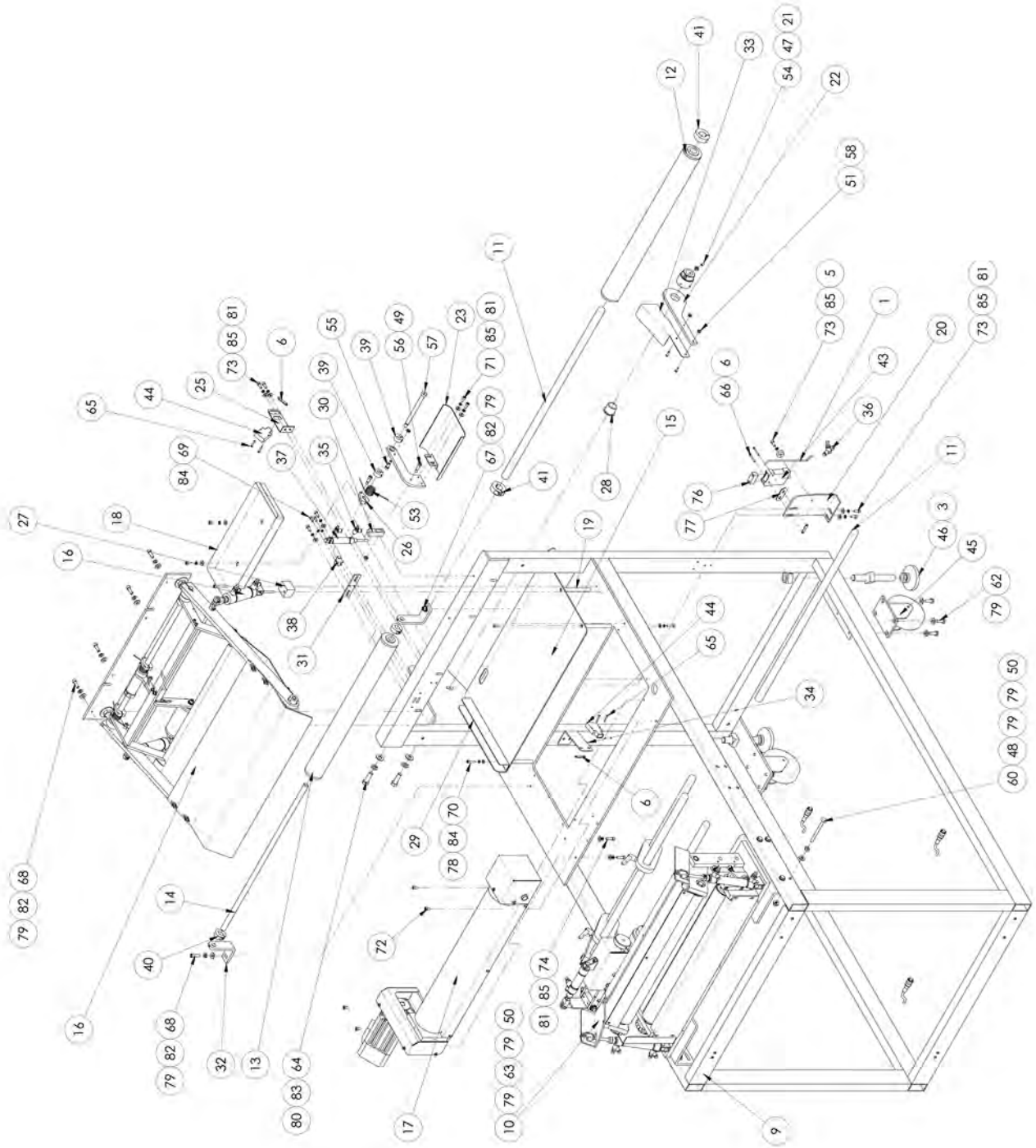

4300170 Border Prefeed Assembly

AAC Drawing Number 4300170 Rev 4

NO	QTY	PART #	DESCRIPTION	NO	QTY	PART #	DESCRIPTION
1	1	40-609B	TUBE, UNCURLING AIR	44	2	FFSM312LVQ	EYE,ELECTRIC,10-30VDC
5*	1	211-203A	CABLE,SBUS,REED SW,9'	45	2	MM431-4	CASTER,4",W/LOCKS
3	2	0411-1063	THREADED ROD	46	2	MML-2	LEVELING PAD, 5/8-11
2*	1	0411-3014F	CABLE,PROX SW, 14'	47	2	NNE10-32	NUT,ELASTIC LOCK
5	1	1278-7154A	CLAMP, 1/8 TUBE	48	1	NNH1/4-20	NUT,HEX,1/4-20
6	3	1975-412A	PLATE,NUT,4-40,.95CTC	49	2	NNH10-24	HEX-NUT 10-24 REG.
30*	1	4080-4205A	CABLE, ENCODER	50	7	NNK1/4-20	NUT,KEP,1/4-20
31*	1	4080-4210C	CABLE,EFKA TREADLE ABC	51	2	NNK6-32	KEP NUT, 6-32
9	1	4300175	FRAME, PREFEED	52	4	NNSH5/8-11	NUT, SQUARE, 5/8-11
10	1	4300225	BORDER TENSION ROD ASSY	53	1	RRLT085N4R	SPRING,TORSION, MOD
11	2	32005004	ROD,SS,3/4 X 24.0L	54	2	SMSSBNK-2	PLUNGER, BALL, 10-32
12	1	32005005	ROLLER, ASSY 2.0 OD .75 ID	55	2	SSAS016032	SHOULDER BOLT 1/4 X 3/8L
13	1	32005006	ROLLER,18.5L,1.9OD,1.59ID	56	1	SSAS016040	SHOULDER BOLT #10 X .375L
14	1	32005007	ROD,STRAIGHT,60C,1/2X20.5	57	1	SSAS024256	SHULDER BOLT 3/8 X 4L
15	1	32005008	PLATE, CLOTH, R.H.	58	2	SSBC80032	6-32 X 1/2 BUT HEAD
16	1	32005600	PREFEED ROLLER ASSY	59	2	SSBC98024	10-32 X 3/8 BUTTON CAP SC
17	1	32005650A	BOTTOM PULLER ROLLER ASSY	60	1	SSBK01192	BOLT, CRGE, 1/4-20X3
18	1	33005534	TOOL TRAY, 1X5X12	61	2	SSFC90032	8-32 X 1/2 FLAT ALLEN CA
19	4	33005623	STANDOFF	62	8	SSHC01048	1/4-20 X 3/4 HEX CAP
20	1	33005639	BRKT,MARK EYE	63	6	SSHC01112	HEX HEAD BOLT 1/4-20X1.75
21	1	33005656	SLEEVE, CLOTH GUARD	64	2	SSHC25080	3/8-16 X 1-1/4 HHCS
22	1	33005657A	ARM,EDGE GUIDE	65	4	SSPS70048	4-40 X 3/4 PAN HD SLOTTED
23	1	33005661	SKID PLATE ASSY	66	2	SSPS70064	4-40 X 1 PAN HD SLOTTED
24	1	33005662	ARM,SKID PLATE	67	1	SSSC01032	1/4-20X1/2 SOC CAP
25	1	33005664	BRKT, EYE	68	5	SSSC01048	1/4-20 X 3/4" SOC CAP SC
26	1	33005667	CLAMP, SPRING	69	2	SSSC90024	#8-32 X 3/8 SOC CAP SC
27	2	33005670	SPACER	70	6	SSSC90048	#8-32 X 3/4 SOC CAP SC
28	1	33005679	BUSHING, EDGE GUIDE	71	2	SSSC95032	10-24 X1/2, SOC CAP
29	1	33005683	GUIDE,BORDER	72	4	SSSC98024	10-32 X 3/8 SOC CAP
30	1	33005686	CLEVIS, SKI LIFT	73	7	SSSC98032	10-32X1/2, SOC CAP
31	1	33005687	MTG PLATE, CYL SKI LIFT	74	2	SSSC98048	10-32 X 3/4 SOC CAP
32	2	33005688	BRKT, TOP TRANSFER ROLLER	75	4	SSSC98096	10-32 X 1-1/2 SOC CAP
33	1	33005699	GUIDE,RH	76	1	V8	LENS,.5 CONV
34	1	98202010	BRACKET, SENSOR	77	1	WW25DW	PLATE,WASHER
35	2	AA198RA510	REV FL CONT,5/32X10-32	78	6	WWF8	WASHER, FLAT, #8
36	1	AA2001F-03	FLOW CONTROL,INLINE,5/32	79	28	WWFS1/4	WASHER,FLAT,SAE,1/4
37	1	AAC8DP-1	CYL, AIR, DA, 9/16B, 1S	80	2	WWFS3/8	WASHER,FLAT,SAE,3/8
38	1	AAFBP-8C	BRKT,PIVOT,5/32 BORE	81	12	WWFS10	WASHER, FLAT, #10, SAE
39	2	CCCL6F	CLAMP COLLAR- 3/8	82	6	WWL1/4	WASHER,LOCK,1/4
40	2	CCCL8F	CLAMP COLLAR- 1/2	83	2	WWL3/8	WASHER,LOCK, 3/8
41	2	CCCL12F	CLAMP COLLAR- 3/4	84	8	WWL8	WASHER,LOCK,#8
42*	3	FFRK44TBS12	CABLE,AE PLUG,12'LONG	85	13	WWL10	WASHER,LOCK,#10
43	1	FFSE3WLC	EYE,SMARTEYE,MARK III				

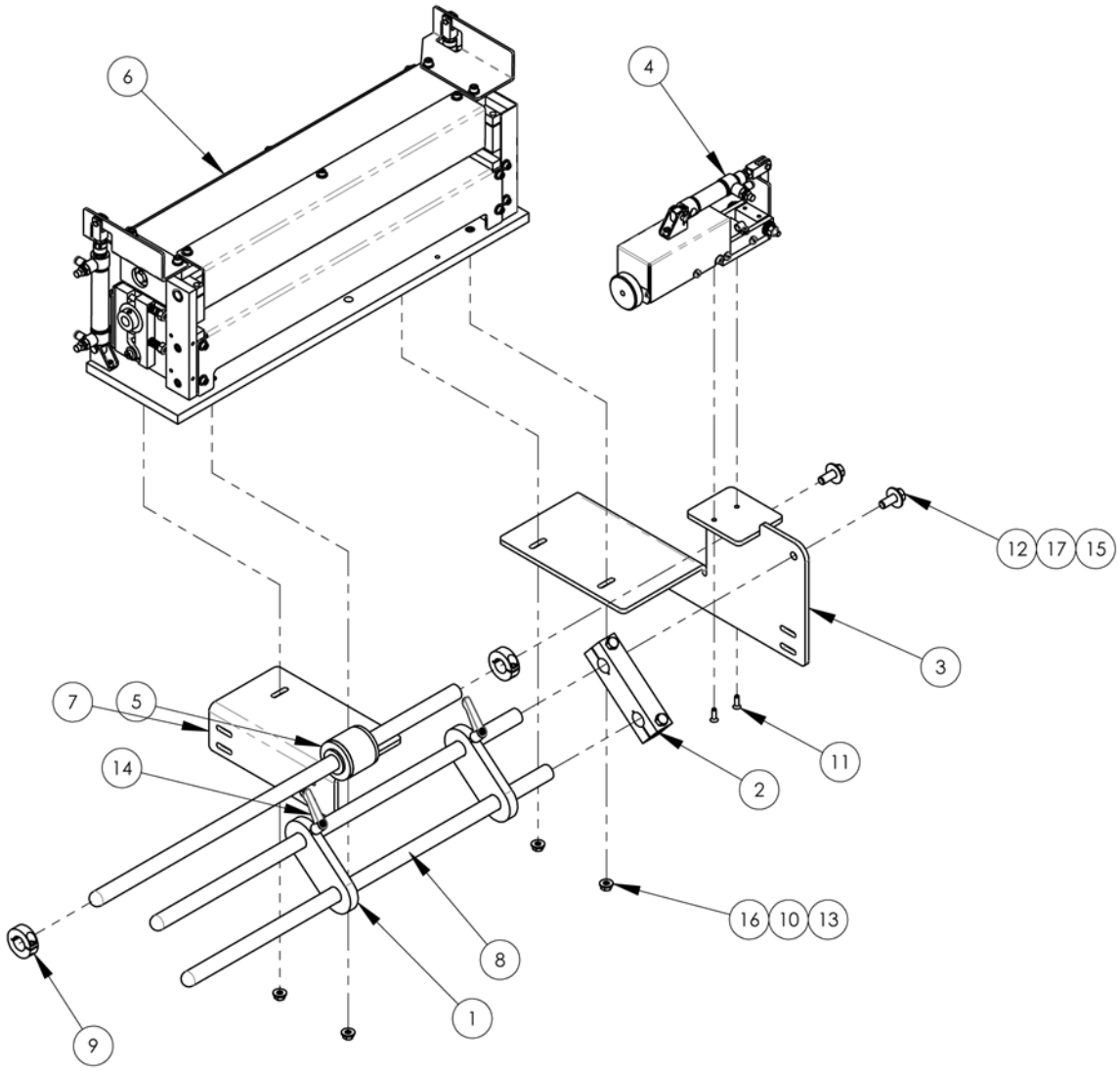

4300225 Border Tension Road Assembly

AAC Drawing Number 4300225 Rev 0

NO	QTY	PART #	DESCRIPTION	NO	QTY	PART #	DESCRIPTION
1	2	1961-211	PLATE, EDGE GUIDE	10	4	NNK1/4-20	NUT,KEP,1/4-20
2	1	1962-3201	CLAMP,3/4ROD,3"CTC	11	2	SSFC98040	#10-32 X 5/8 FLAT ALLEN
3	1	4300259	MOUNT, TENSION, BORDER	12	2	SSHC25064	3/8-16 X 1,HEX CAP
4	1	4300285	ENCODER ASSEMBLY	13	4	SSSC01064	1/4-20 X 1 SOC CAP
5	1	4300289	ROLLER,1.50L,2 OD,.75 ID	14	2	TTH32415	HANDLE,THDED,1/4-20X7/8
6	1	4300310	BORDER TENSION ASSY	15	2	WWF3/8	WASHER,FLAT,3/8 OR 10MM
7	1	4300313	BRKT, MTG, TENSION ASSY	16	4	WWFS1/4	WASHER,FLAT,SAE,1/4
8	3	32005004	ROD,SS,3/4 X 24.0L	17	2	WWL3/8	WASHER,LOCK, 3/8
9	2	CCCL12F	CLAMP COLLAR- 3/4				

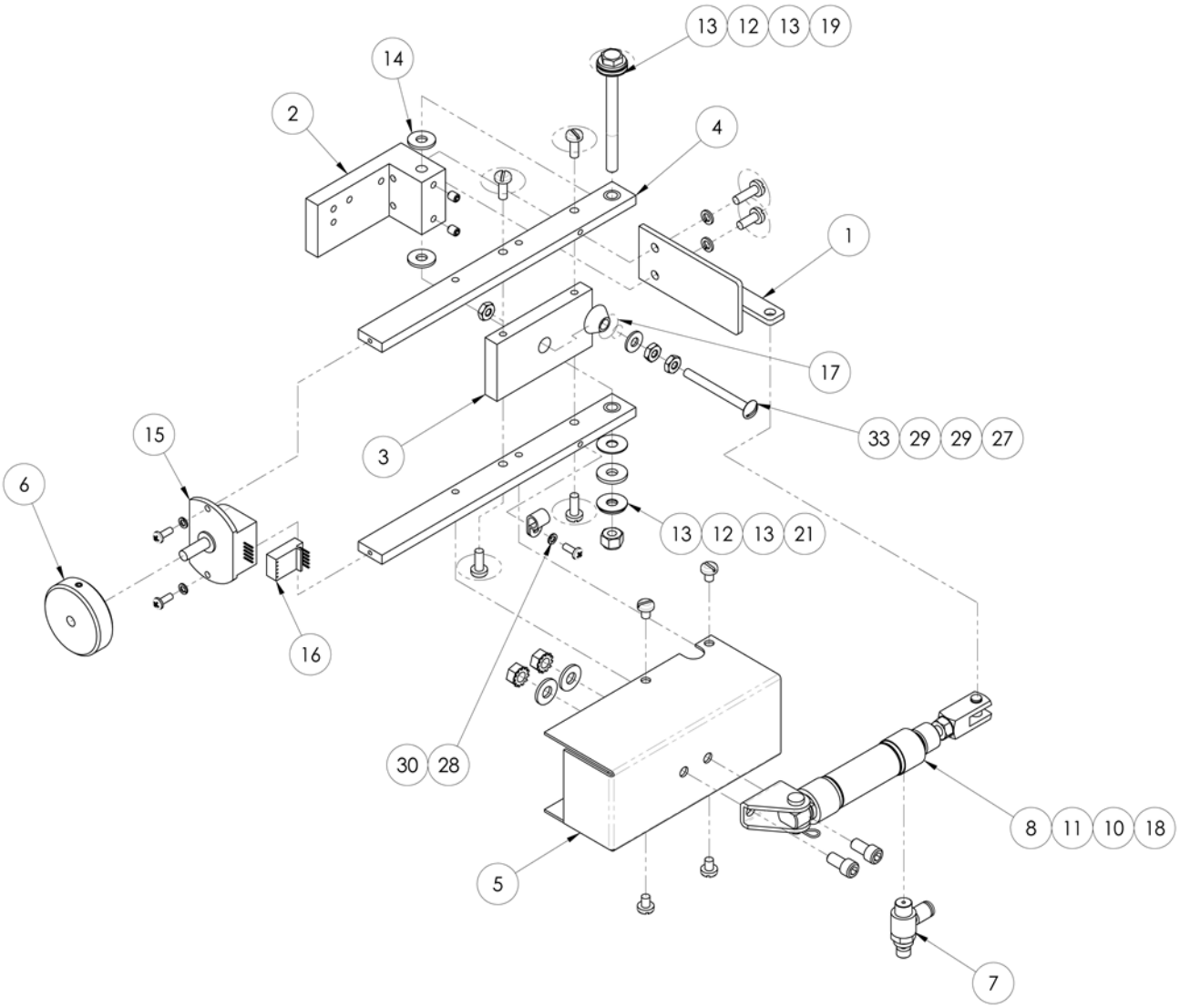
13
12
13
19
14
2
4
1
17
33
29
29
27
15
3
6
13
12
13
21
16
30
28
8
11
10
18
5
7

4300285 Encoder Assembly

AAC Drawing Number 4300285 Rev 1

NO	QTY	PART #	DESCRIPTION
1	1	1335637	MOUNT, CYL CLEVIS
2	1	1335M-2502	MOUNT,BASE1335M-2500
3	1	1335M-2503	PLATE,TENSION
4	2	1335M-2511	BRKT,SIDE,LONG
5	1	1335M-2514	COVER,LONG
6	1	4300284	WHEEL, ENCODER
7	1	AA198RA508	FLOW CONTROL,5/32 X 1/8"
8	1	AAC7DP-.5	CYLINDER,AIR,DA
9	1	AAF1/8	CLAMP, BLACK PLASTIC
10	1	AAFBP-11C	BRKT,PIVOT,1/4 BORE
11	1	AAFCT-7	HUMPHREY CLEVIS
12	2	BBNTA411	BEARING,THRUST,.250B
13	4	BBTRA411	WASHER,THRUST,STEEL
14	2	BBTT601	WASHER,THRUST,BRONZE
15	1	EEH1-096-HS	ENCODER,OPTICAL
16	1	EEPC3	MODULE,ENCODER
17	1	RRBEEHIVEH	SPRING,HEAVY BEEHIVE
18	1	NNH3/8-16	1/4-28 HEX NUT
19	4	WWFS1/4	WASHER FLAT, 1/4
20	1	SSHC01192	HEX HEAD BOLTS, 1/4-20 X
21	1	NNE1/4-20	NUT,ELASTIC LOCK,1/4-20
22	2	SSSC01032	1/4-20X1/2 SOC CAP
23	2	NNK1/4-20	KEP NUT, 1/4-20
24	2	WWL10	#10 LW
25	1	SSPS98040	10-32X5/8 PAN HD SLOT
26	5	SSPS98032	10-32X1/2 PAN HD SLOT
27	1	WWFS10	WASHER, FLAT #10
28	3	WWL6	WASHER,LOCK,6
29	3	NNH10-24	#10-24 HEX NUT
30	3	SSPP80024	#6-32 X 3/8 PAN HD PHIL
31	4	SSPS98016	10-32 X 1/4 PAN HD SLOT
32	2	SSSS98016	#10-32 X 1/4 KNURL PT
33	1	SSTS95128	SCREW, TRUSS HD SLOTTED, 10-24X2

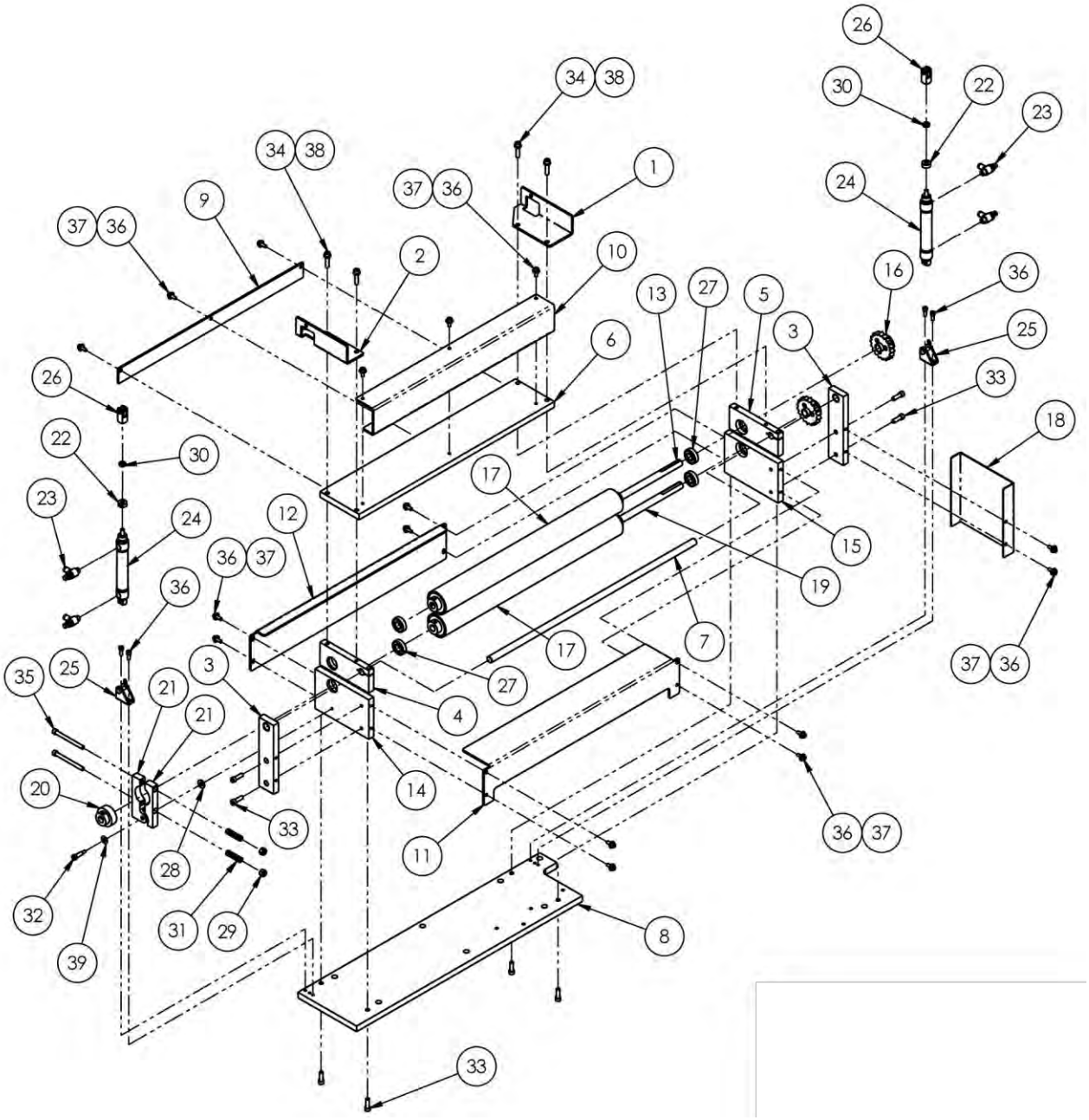
26
30
22
23
24
34
38
1
37
36
9
2
10
16
36
13
27
5
3
25
6
33
18
17
15
19
12
7
4
14
11
8
35
21
20
28
31
29
32
39

4300310 Border Tension Assembly

AAC Drawing Number 4300310 Rev 0

NO.	QTY	PART #	DESCRIPTION
1	1	1355081	BRKT,LIFT,R.H
2	1	1355083	BRKT,LIFT,LEFT
3	2	1961-304	HINGE PLATE,PULLER
4	1	1961-305	TOP,LEFT SIDE,PULLER
5	1	1961-306	TOP,RIGHT SIDE,PULLER
6	1	1961-307A	PLATE,TOP,PULLER
7	1	1961-311A	ROD,STRIAIGHT,CRS,1/2X21
8	1	1961-313A	PLATE,BASE,PULLER
9	1	1961-371A	GUARD,ROLLER
10	1	4300297	GUARD,TOP
11	1	4300298	GUARD,BOTTOM
12	1	4300299	GUARD,BOTTOM
13	1	4300301	SHAFT, IDLER, UPPER
14	1	4300302	PLATE, LEFT SIDE
15	1	4300303	PLATE, RIGHT SIDE
16	2	4300305	GEAR, TENSION ROLLER
17	2	4300306	ROLLER,IDLER,18" CAP
18	1	4300307	GUARD, GEAR
19	1	4300308	SHAFT, IDLER, LOWER
20	1	4300309	HUB, BRAKE
21	2	4300311	BRAKE, ROLLER
22	2	4300314	COLLAR,CLAMP,1/4ID,1/4W
23	4	AA198RA508	FLOW CONTROL,5/32 X 1/8"
24	2	AAC7DP-2	CYLINDER,AIR,DA
25	2	AAFBP-11C	BRKT,PIVOT,1/4 BORE
26	2	AAFCT-7	CLEVIS,AIR CYL, 1/4-28
27	4	BB1L005	BEARING,BALL,.500D
28	1	BBTT601	WASHER,THRUST,BRONZE
29	2	NNE1/4-20	NUT,ELASTIC LOCK,1/4-20
30	2	NNJ1/4-28	NUT, HEX, JAM, 1/4-28
31	2	RRLC038E13	SPRING,COMP .038X.36X1.38
32	1	SSAS016040	SHOULDER BOLT #10 X .375L
33	8	SSSC01048	1/4-20 X 3/4" SOC CAP SC
34	4	SSSC01064	1/4-20 X 1 SOC CAP
35	2	SSSC01176	1/4-20 X 2-3/4 SOC CAP
36	20	SSSC98032	10-32X1/2, SOC CAP
37	16	WWFS10	WASHER, FLAT, #10, SAE
38	4	WWL1/4	WASHER,LOCK,1/4
39	1	WWS307-1	WASHER,SPRING,BELVEL

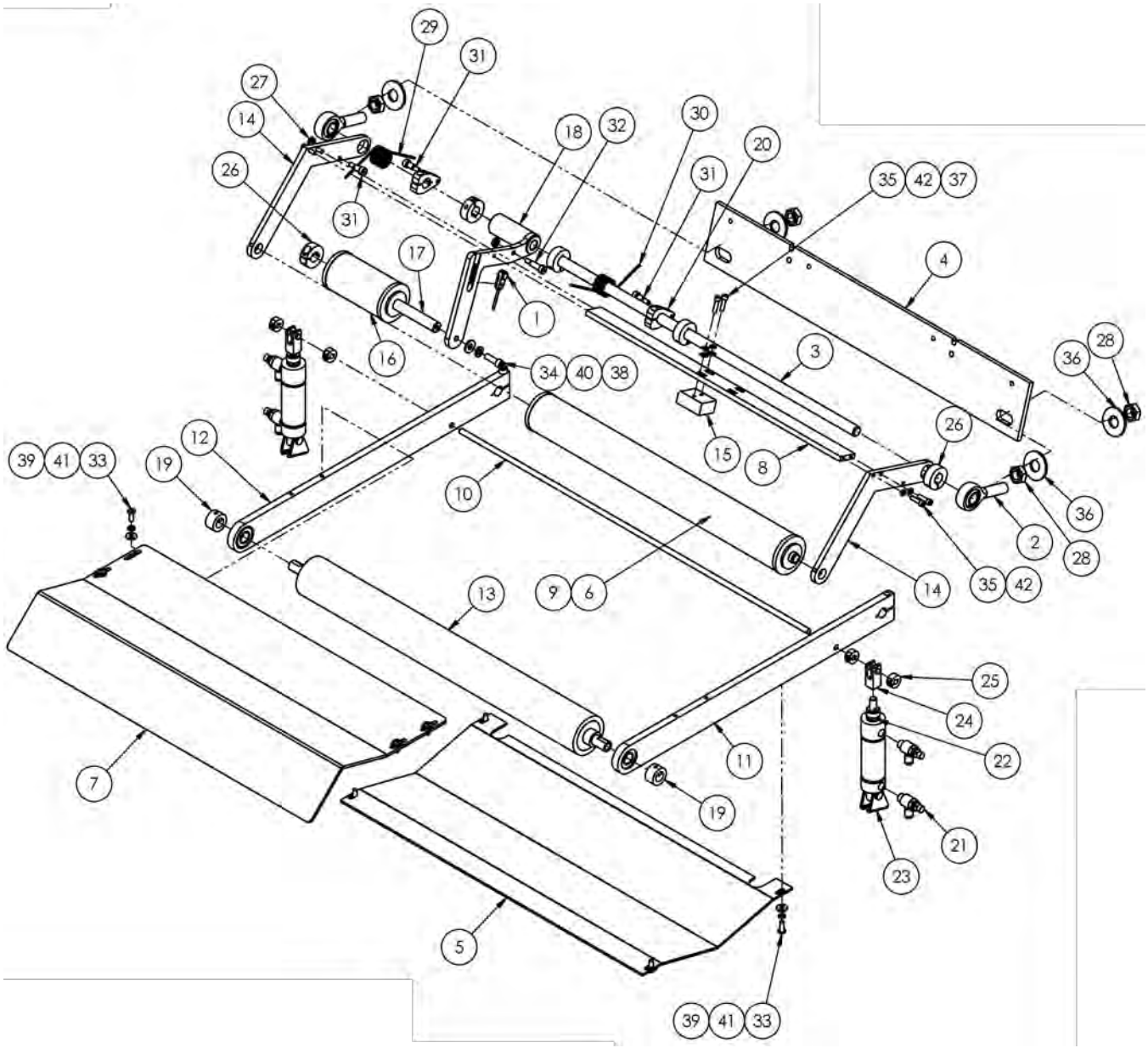
29
31
27
14
26
31
18
32
30
20
31
35
42
37
4
17
1
16
3
28
36
34
40
38
26
12
39
41
33
19
10
15
8
36
2
28
35
42
14
13
9
6
25
24
22
11
19
21
23
7
5
39
41
33

32005600 Prefeed Roller Assembly

AAC Drawing Number 9002298 Rev 4

NO.	QTY	PART #	DESCRIPTION
1	1	1278-7055D	PROX SWITCH W/PLUG,12"
2	2	1325-11	ROD END,MALE, .5I.D.X.5-2
3	1	32005602	ROD,STRAIGHT,60C, 1/2X20
4	1	32005603	BAR, PIVOT MOUNTING
5	1	32005604	BRACE, PREFEED
6	1	32005605	ROLLER, 16.0 L, 1.9 OD,
7	1	32005606	COVER
8	1	32005607	BRACE, TARGET ADJUST
9	1	32005608	SHAFT,60C,1/2OD,17.11L
10	1	32005609	ROD,STRAIGHT,60C,25OD X 2
11	1	33005610	PULLER, LEFT ARM
12	1	33005628	PULLER, RIGHT ARM
13	1	33005652A	ROLLER,IDLER,2.0 DIA URET
14	2	33005653	ARM, SEAM DETECT
15	1	33005669	TARGET BLOCK
16	1	33005671	ROLLER,1.90 OD, 1.59 ID
17	1	33005672	ROD,STRA,SP,60C,1/2,4.5L
18	1	33005675	ROLLER ARM ASSY
19	2	33005676	1/2 X 7/8 SET COLLAR
20	2	33005678	CLAMP,SPRING
21	4	AA198RA508	FLOW CONTROL,5/32 X 1/8"
22	2	AAC6DP-1	CYLINDER,AIR,DA
23	2	AAFBP-11C	BRKT,PIVOT,1/4 BORE
24	2	AAFCT-11	CLEVIS, CYL, 5/16-24 ,1/4
25	4	CCCL4F	COLLAR,1/4,CLAMP
26	5	CCCL8F	CLAMP COLLAR- 1/2
27	2	NNH10-24	HEX-NUT 10-24 REG.
28	4	NNJ1/2-20	1/2-20 JAM NUT
29	1	RRLT085N4L	SPRING,TORSION,.085 WIRE, LEFT
30	1	RRLT085N4R	SPRING,TORSION, MOD
31	3	SSAS016024	SHOULDER BOLT #10 X .375L
32	1	SSAS016040	SHOULDER BOLT #10 X .375L
33	8	SSBC95032	10-24 X 1/2 BUTTON CAP SC
34	1	SSSC01048	1/4-20 X 3/4" SOC CAP SC
35	6	SSSC90040	8-32 X 5/8 SOC CAP SC
36	4	WWF1/2	WASHER,FLAT,1/2
37	2	WWF8	WASHER, FLAT, #8
38	1	WWFS1/4	WASHER,FLAT,SAE,1/4
39	8	WWFS10	WASHER, FLAT, #10, SAE
40	1	WWL1/4	WASHER,LOCK,1/4
41	8	WWL10	WASHER,LOCK,#10
42	6	WWL8	WASHER,LOCK,#8

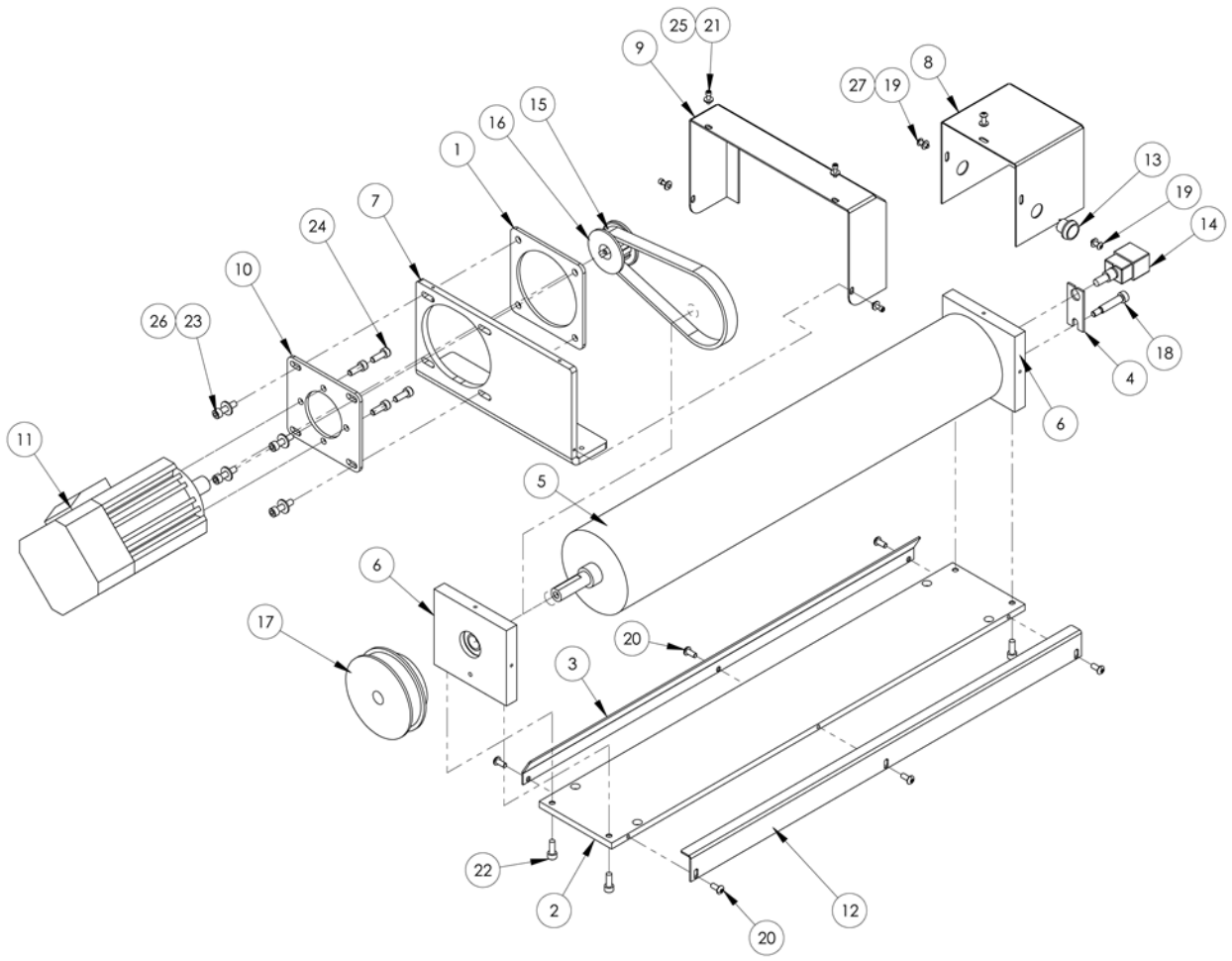

32005650A Bottom Puller Roller Assembly

AAC Drawing Number 9002271 Rev 4

NO	QTY	PART #	DESCRIPTION	NO	QTY	PART #	DESCRIPTION
1	1	0411-016	PLATE,NUT,MOTOR MOUNT	15	1	GG150L050	BELT, 3/8P, 40T, 1/2W
2	1	32005652	PLATE,BEARING MOUNT	16	1	PP10LF050M3	PULLEY, GEAR, 3/8P, 10T,
3	1	32005653	BRACKET,GUARD	17	1	PP24LB050M1	PULLEY 3/8P, 24T, 1/2BORE
4	1	33004080	BRKT,ENCODER SUPPORT	18	1	SSAS016064	SCREW,ALLEN SHOULDER
5	1	33005603A	ROLLER,DRIVE,18" CAP	19	3	SSBC80024	6-32 X 3/8 BUTTON HEAD
6	2	33005608	BLOCK, BEARING	20	6	SSBC90020	8-32X3/8 BUTTON CAP
7	1	33005674	BRACKET, MOTOR MTG.	21	4	SSSC70024	4-40 X 3/8 SOCKET CAP
8	1	33005681	GUARD ENCODER	22	4	SSSC98032	10-32X1/2, SOC CAP
9	1	33005692	BELT GUARD	23	4	SSSC98048	10-32 X 3/4 SOC CAP
10	1	4059-3200	PLATE, CONVERSION	24	4	SSSCM5X14	SCREW,SOC CAP,M5-0.8 X 14
11	1	4059-DC1500A	MOTOR & CONTROLLER ONLY	25	4	WWF4	WASHER, FLAT, #4
12	1	4300326	GUARD, PREFEED ROLLER	26	4	WWFS10	WASHER, FLAT, #10, SAE
13	1	EE49111AS	PUSH BUTTON SWITCH ASSY	27	3	WWFS6	WASHER, FLAT, #6
14	1	EENC256	ENCODER,SBUS,256,1/4				

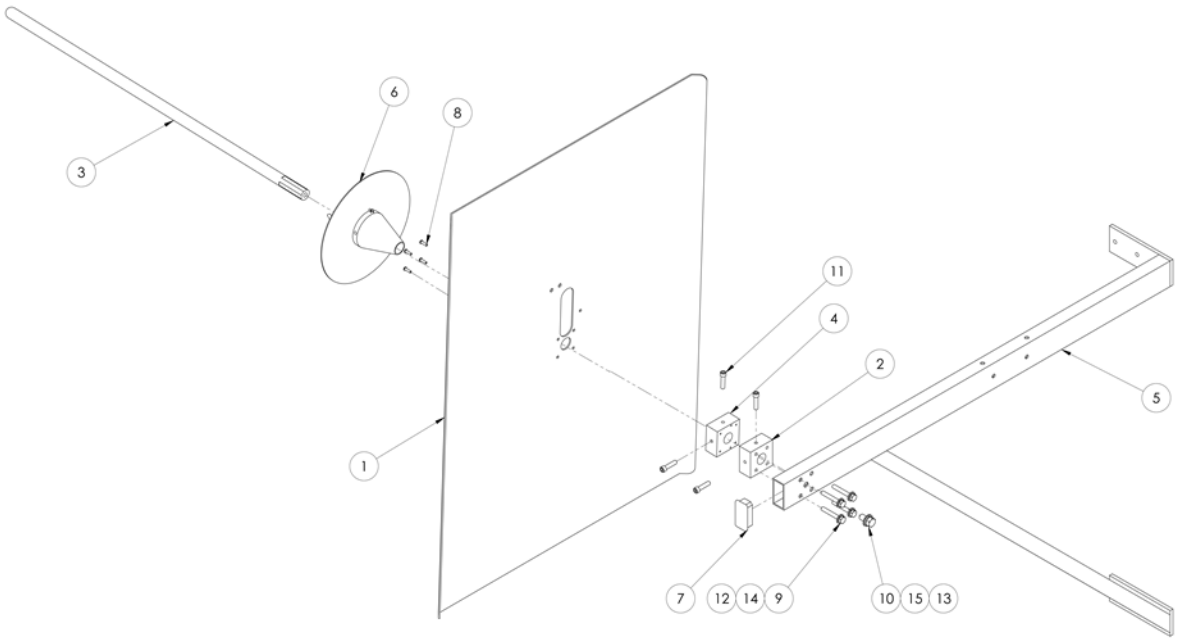

4300300 Roll Holder Assembly

AAC Drawing Number 4300300 Rev 0

NO	QTY	PART #	DESCRIPTION
1	1	784B-2436	PLATE, ALU, 23.75 X 31.75
2	1	1961-251C	HUB UNWIND SHAFT
3	1	1961-252D	ROD, ROLL, 27" L
4	1	1961-253A	HUB, UNWIND STAND
5	1	32007704	FRAME, ROLL HOLDER
6	1	33008708	DISC ASSY,8"
7	1	MM132-1496	PLUG 1 X 2
8	4	SSBC80032	6-32 X 1/2 BUT HEAD
9	4	SSHC01112	1/4-20 X 1-3/4 HHCS
10	1	SSHC25048	3/8-16X3/4,HEX CAP
11	2	SSSC01064	1/4-20 X 1 SOC CAP
12	4	WWFS1/4	WASHER,FLAT,SAE,1/4
13	1	WWFS3/8	WASHER,FLAT,SAE,3/8
14	4	WWL1/4	WASHER,LOCK, 1/4
15	1	WWL3/8	WASHER,LOCK, 3/8

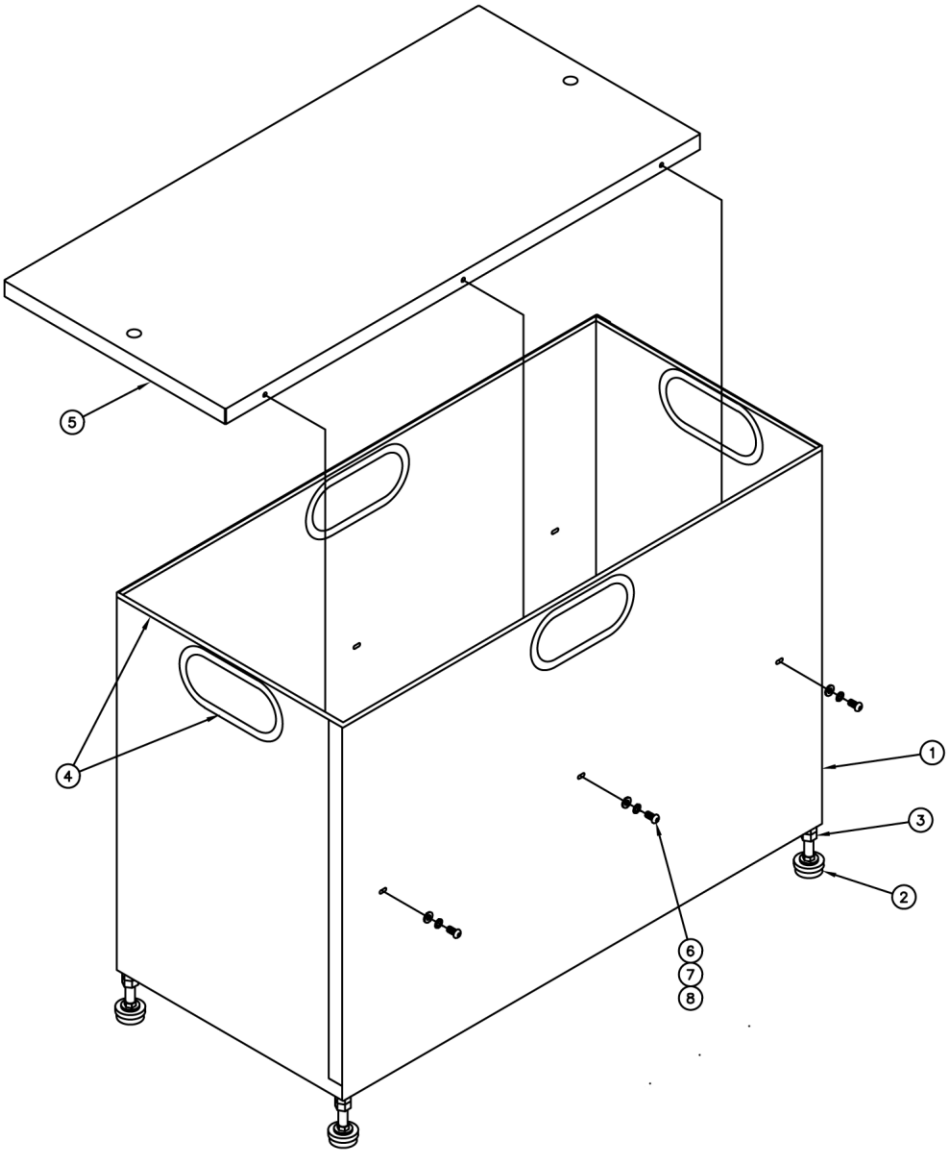

33008300 BORDER BOX ASSY.

AAC Drawing Number 192192C Rev 0

ON	QTY	PART #	DESCRIPTION
1	1	33008399	BOX, BORDER
2	4	MMFB4444	RUBBER FEET
3	4	NNH1/2 - 13	HEX NUT
4	24'	MM100 - 1/8	DOOR TRIM, BLACK
5	1	33008305	PLATE, REMOVABLE
6	6	SSBC98032	SCREW, BUTTON HD
7	6	WWF10	WASHER, FLAT, 10
8	6	WWL10	WASHER, LOCK, 10

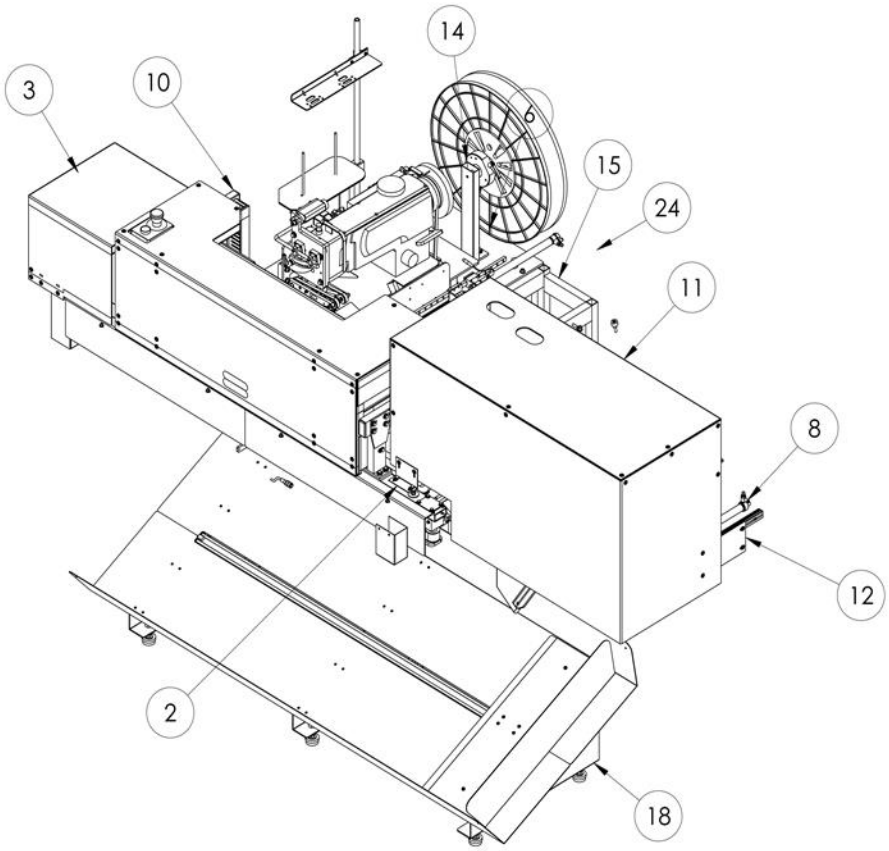

SEE SHEET 2 FOR EXPLODED VIEW

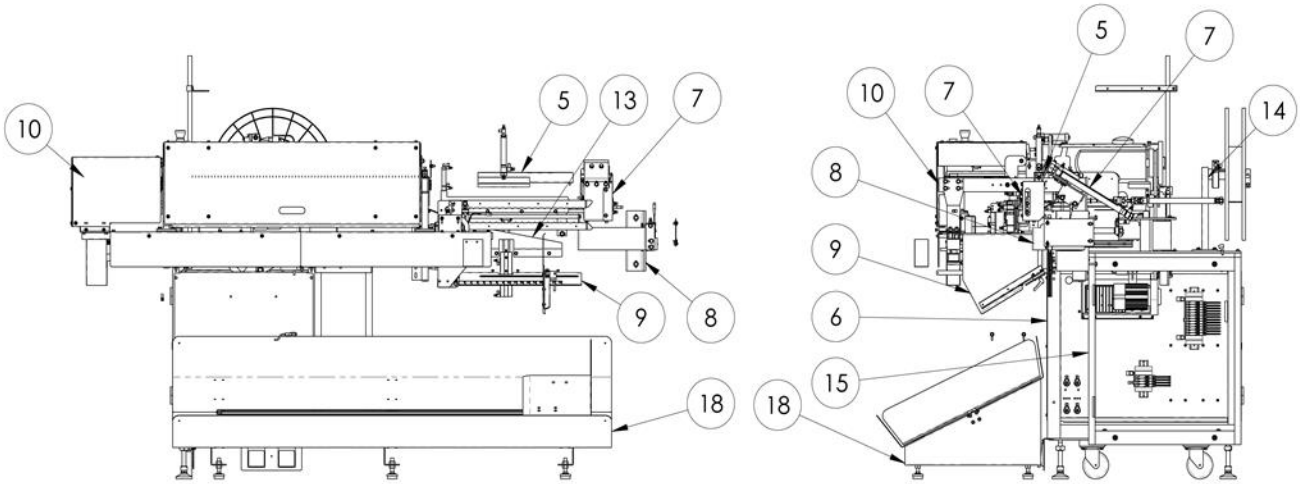

NOTE: ITEMS (3) & (11) NOT SHOWN FOR CLARITY

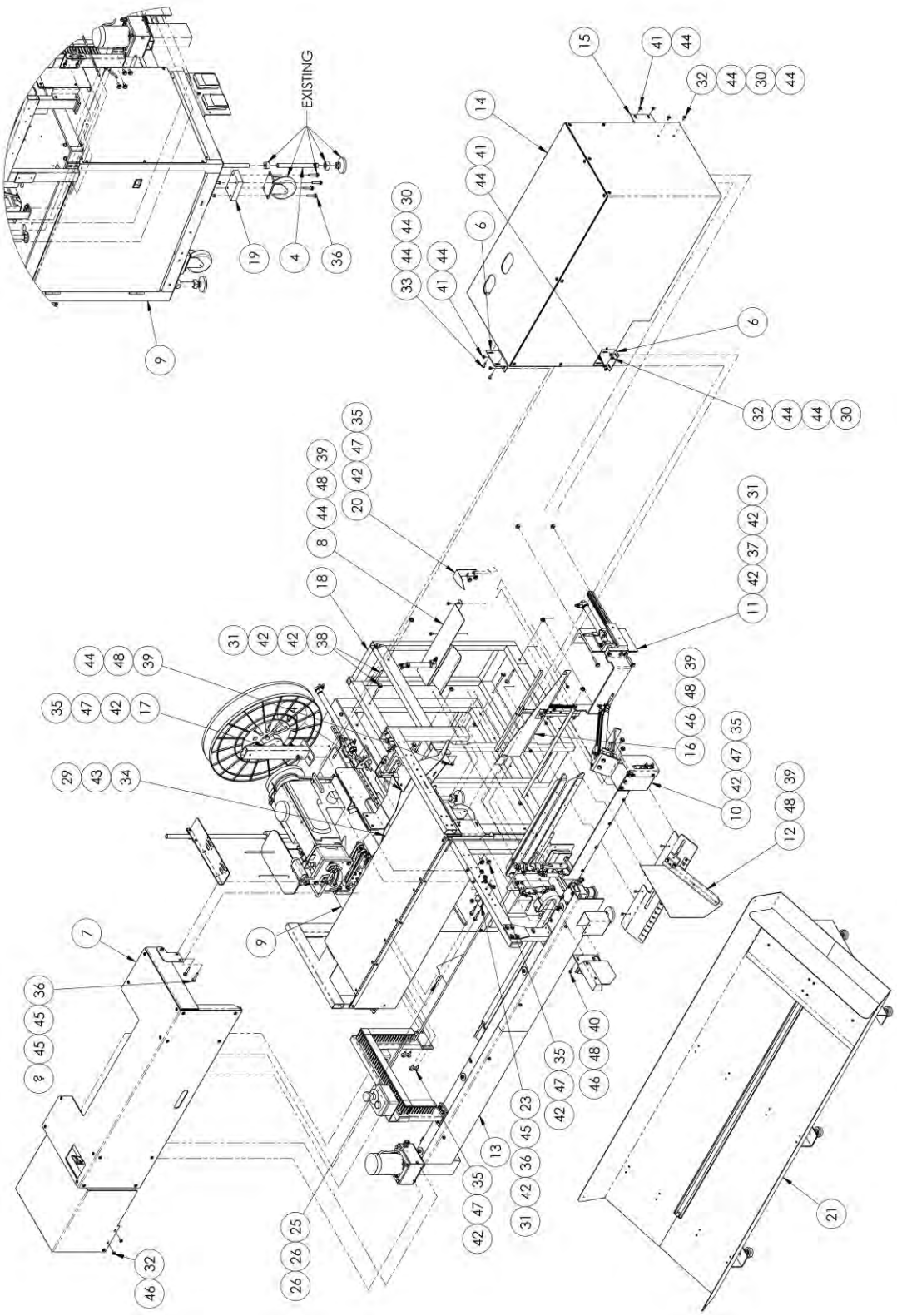
EXISTING

4300200 Closer Assembly

AAC Drawing Number 4300200 Rev 3

NO	QTY	PART #	DESCRIPTION
1	1	3307B208	LAW LABEL INSERTER
2	AR	4300-PD1	DIAGRAM,PNEUMATIC,CLOSER
3	AR	4300-WD1	DIAGRAM,WIRING,CLOSER
4	2	1315661	ROD, THREADED, 5/8-11X7LG
5	1	1961141	SPINDLE ASSY, 1.5" BORE
6	2	3200078	BRACKET, FRONT GUARD
7	AR	3200190	COVERS, CLOSER CARRIAGE
8	1	4300202	DEFLECTOR, BORDER FEED
9	1	4300210	CONSOLE, CLOSER, H/T/S/M
10	1	4300327	PRIMARY GRIPPER ASSY
11	1	4300335	BORDER SUPPORT ASSEMBLY
12	1	4300339	EDGE GUIDE ASSY.
13	1	4300341	SECONDARY CLAMP/TRANSPORT
14	1	4300344	COVER, GUILLOTINE
15	1	4300348	BRACKET,SIDE GUARD
16	1	4300350	GUILLOTINE BRIDGE ASBLY
17	1	4300353	ROLL HOLDER ARM
18	1	4300370	FRAME, CONNECTOR
19	2	4300371	SPACER, CASTER PLATE
20	1	4300374	POINTER, BORDER WIDTH
21	1	4300390	INDEXING TRAY ASSY
22	1	4300530	CLOSER CARRIAGE COVER
23	1	4300547	HOLDER,EDGE GUIDE ROD
24	1	32006515A	GUIDE, MATERIAL
25	1	32006520D	EDGE GUIDE WELDMENT
26	2	CCCL4F	COLLAR,1/4,CLAMP
27	1	MM1492J3	TERMINAL BLOCK,1 POLE,5MM
28	1	MMSPOOL2.13	SPOOL,PLASTIC,8" HUB
29	2	NNE8-32	NUT,ELASTIC LOCK, 8-32
30	6	NNE10-32	NUT,ELASTIC LOCK
31	14	NNK1/4-20	NUT,KEP,1/4-20
32	6	SSBC98032	10-32 X 1/2 BUTTON CAP SC
33	2	SSBC98048	10-32 X 3/4 BUTTON CAP SC
34	2	SSFC90032	8-32 X 1/2 FLAT ALLEN CA
35	13	SSHC01048	1/4-20 X 3/4 HEX CAP
36	12	SSHC01096	1/4-20 X 1-1/2 HHCS
37	2	SSHC01112	1/4-20 X 1-3/4 HHCS
38	8	SSHC01160	1/4-20 X 2-1/2 HHCS
39	15	SSHC98032	10-32X1/2 HEX HD
40	2	SSHC98048	SCREW, HEX CAP #10-32X.75
41	6	SSZS93032	SCREW, SHT.METAL 10 ZIP
42	35	WWF1/4	WASHER, FLAT, 1/4", COM
43	2	WWF8	WASHER, FLAT, #8
44	22	WWF10	WASHER, FLAT, #10, COM
45	6	WWFS1/4	WASHER,FLAT,SAE,1/4
46	12	WWFS10	WASHER, FLAT, #10, SAE
47	13	WWL1/4	WASHER,LOCK, 1/4
48	17	WWL10	WASHER,LOCK,#10

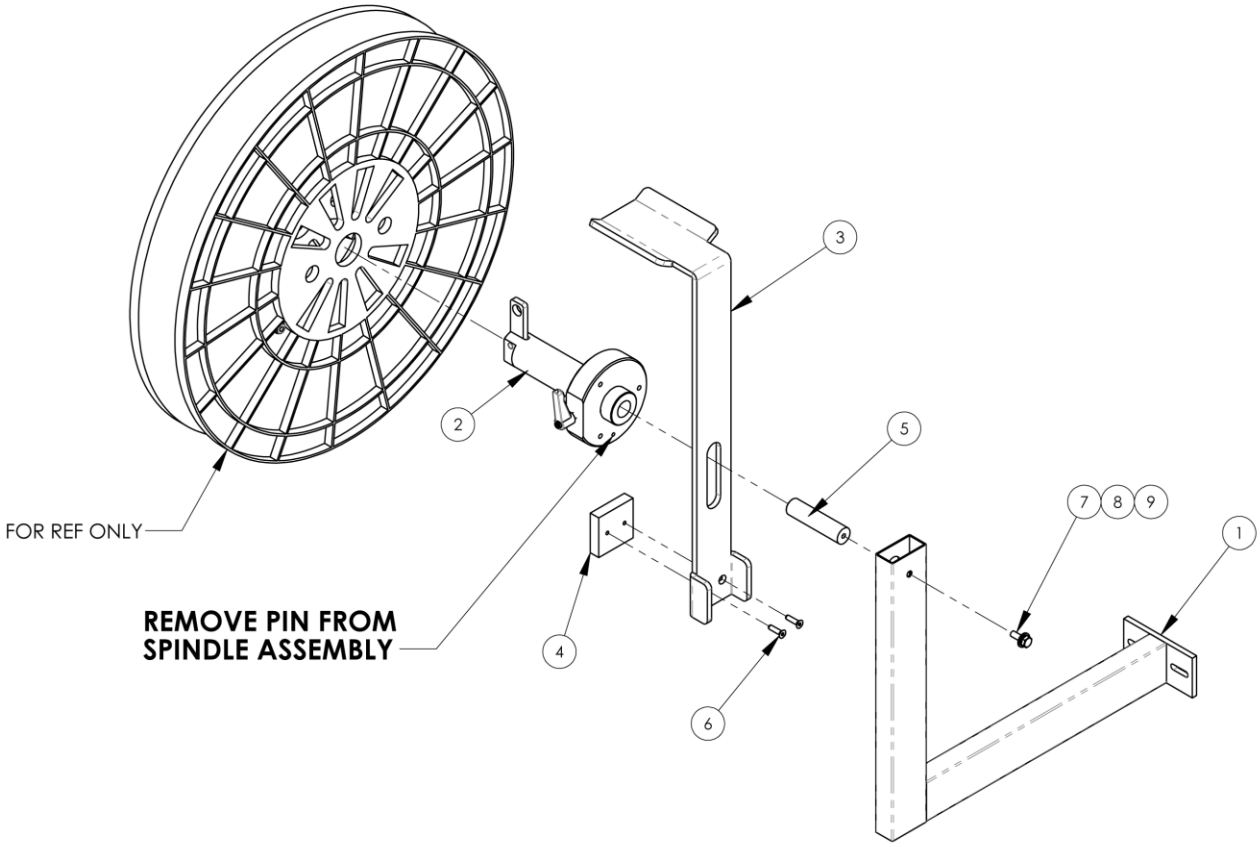

4300130 Roll Holder Assembly

AAC Drawing Number 4300130 Rev 1

NO.	QTY	PART #	DESCRIPTION
1	1	1959335	ROLL HOLDER ARM
2	1	1961141	SPINDLE ASSY, 1.5" BORE
3	1	4300199	BRAKE, WEIGHT
4	1	4300203	WEIGHT, BRAKE
5	1	4300434	PIN
6	2	SSFC98048	#10-32 X .75 SHCSF
7	1	SSHC01048	1/4-20 X 3/4 HEX CAP
8	1	WWFS1/4	WASHER,FLAT,SAE,1/4
9	1	WWL1/4	WASHER,LOCK,1/4

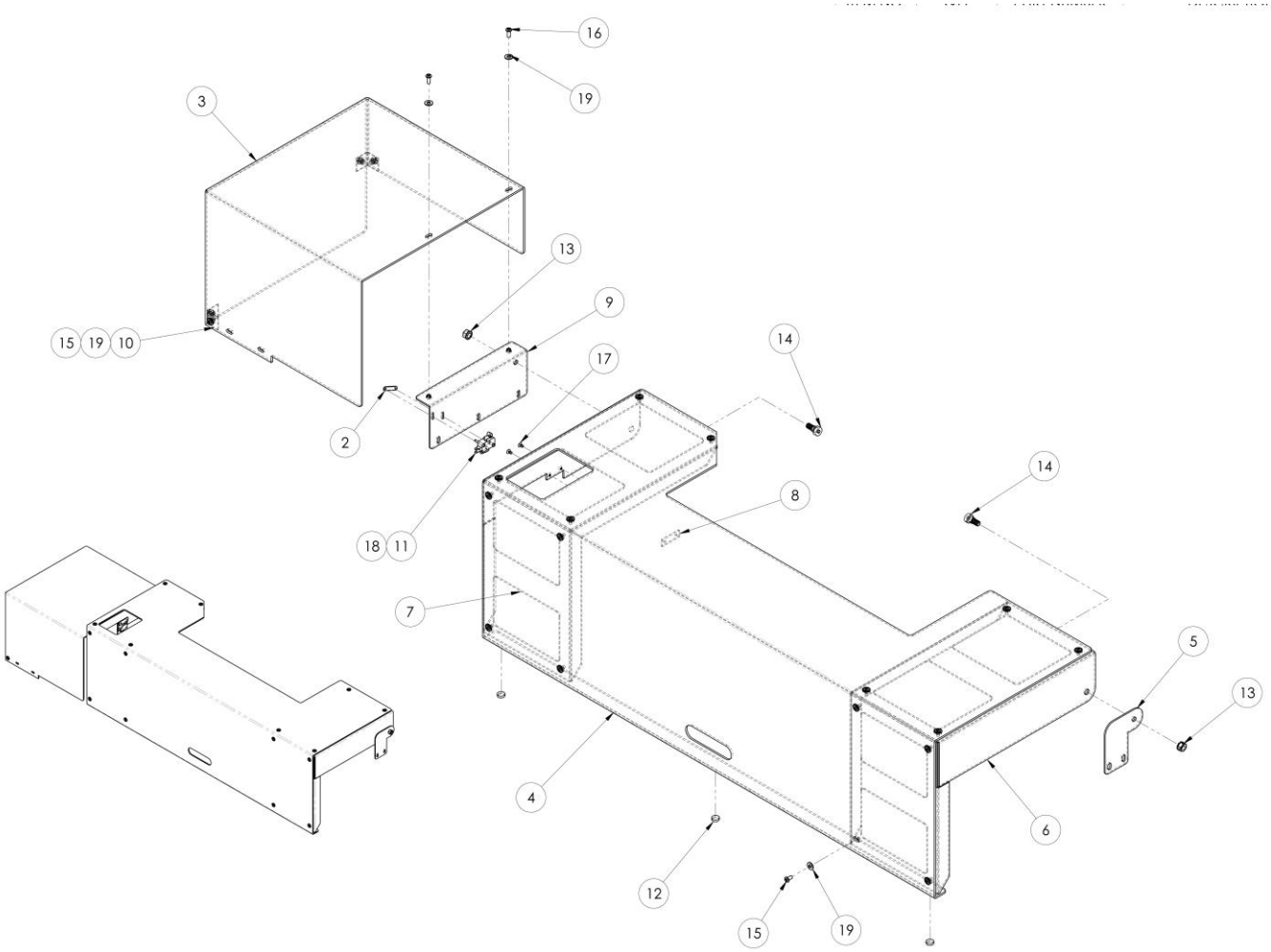

3200190 Closer Carriage Covers

AAC Drawing Number 3200190 Rev 0

NO	QTY	PART #	DESCRIPTION	NO	QTY	PART #	DESCRIPTION
1	1	12788-503D	CABLE, 1' LONG, 2 COND.	11	1	A-2014-39	MICRO SWITCH
2	1	1975-412A	PLATE,NUT,4-40,.95CTC	12	3	MMSLD-ECH	1/2" DIA RUBBER BUMPER
3	1	3200181	GUARD, CARRIAGE MOTOR	13	2	NNK5/16-18	NUT,KEP,5/16-18
4	1	3200182	GUARD, CLOSER CARRIAGE	14	2	SSAS024016	SHLDR SCR,3/8X1/4X5/16-18
5	1	3200184	BRACKET, COVER PIVOT	15	20	SSBC98024	10-32 X 3/8 BUTTON CAP SC
6	1	3200204	BRACE, COVER, RIGHT	16	2	SSBC98032	10-32 X 1/2 BUTTON CAP SC
7	1	3200205	BRACE, COVER, LEFT	17	2	SSFC80016	SCR,FLAT HD,CAP,6-32 X 1/4
8	1	3200206	PLATE, SWITCH	18	2	SSPS70048	4-40 X 3/4 PAN HD SLOTTED
9	1	3200207	MOUNT, CARRIAGE COVER	19	22	WWFS10	WASHER, FLAT, #10, SAE
10	2	98-6819A	BRKT,CORNER 2 x 10-32				

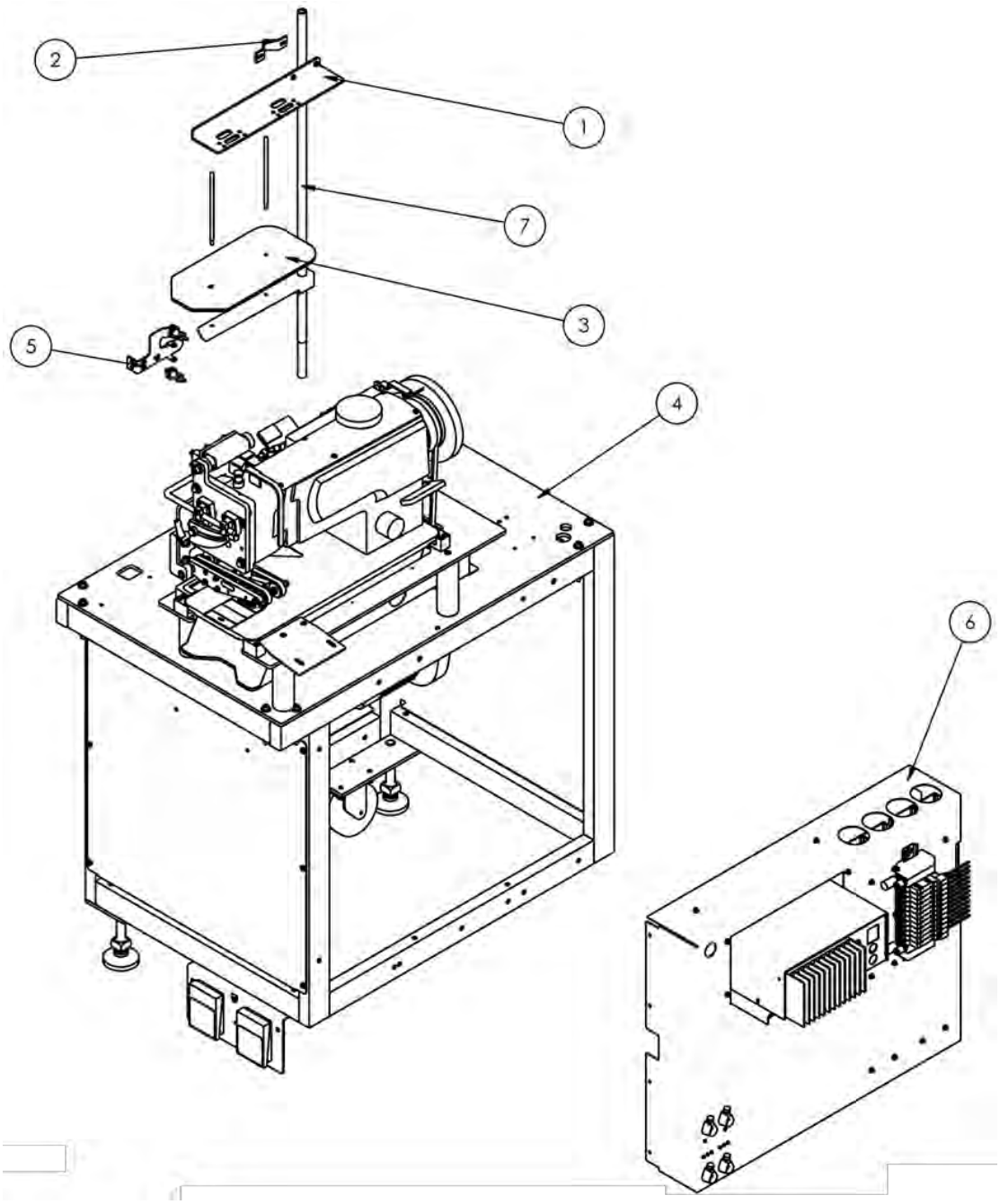

4300210 Closer Console

AAC Drawing Number 4300210 Rev 0

NO.	QTY	PART #	DESCRIPTION	NO.	QTY	PART #	DESCRIPTION
1	1	0411-069D	BRKT, THREAD BREAK DETECT	6	1	4300013	CONT PANEL, CLOSER
2	1	0411-070	CLAMP, SENSOR BRACKET	7	1	4300056	POLE, THREAD STAND
3	1	1959-112	2 POS THREAD PLATE ASSY	8	2	NNH5/8-18	NUT,HEX,5/8-18
4	1	3200210	CLOSER STATION	9	2	WWF5/8	WASHER,FLAT,5/8
5	1	4003-500B	THREAD BREAK SENSOR ASSY	10	1	WWL5/8	3/8 LOCK WASHER

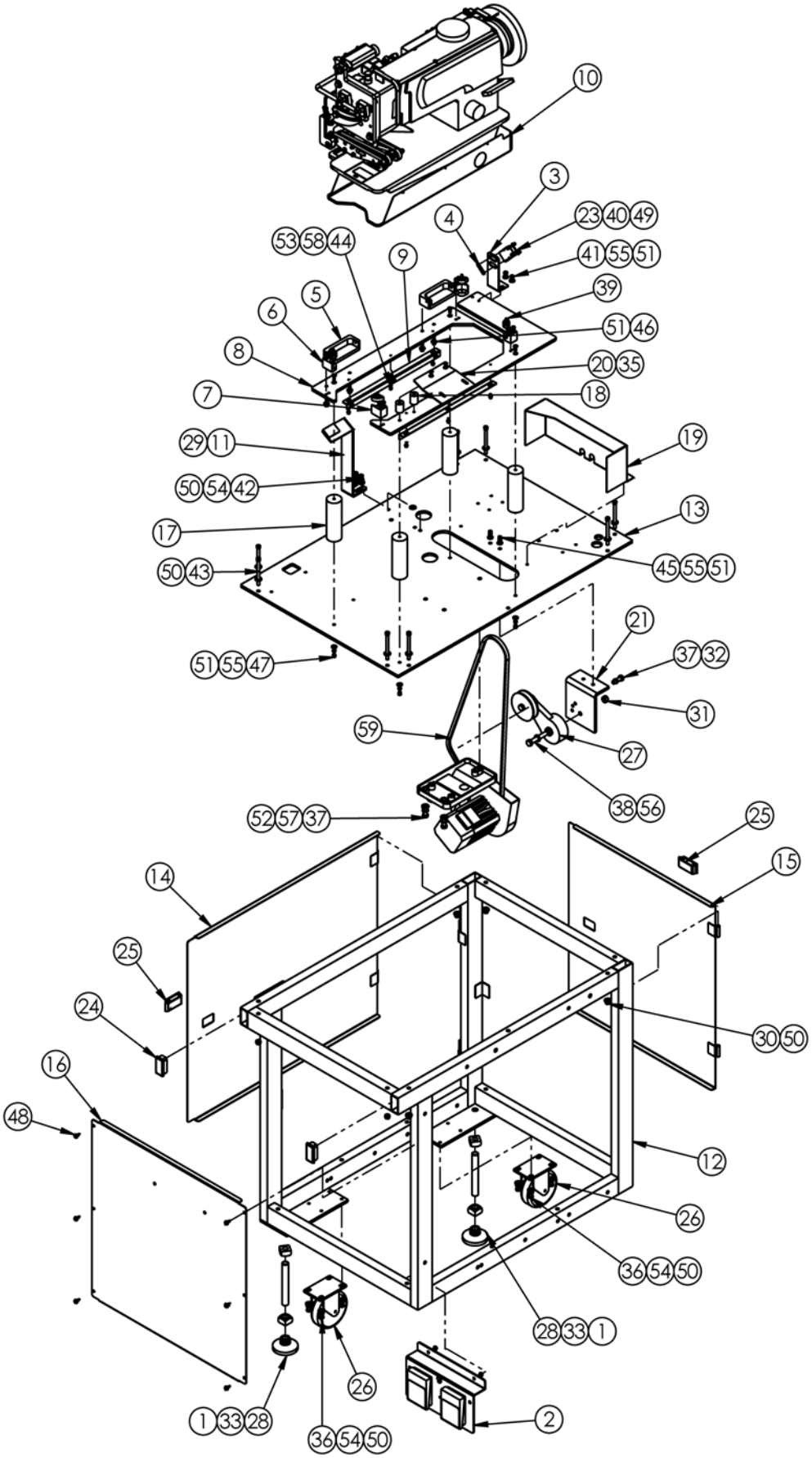
10
3
4
23 40 49
53 58 44
9
41 55 51
5
39
6
51 46
8
20 35
7
18
29 11
19
50 54 42
13
17
45 55 51
50 43
21
51 55 47
37 32
31
59
27
38 56
52 57 37
25
15
14
25
24
30 50
16
48
12
26
36 54 50
28 33 1
26
1 33 28
36 54 50
2

3200210 Closer Stations

AAC Drawing Number 3200210 Rev 1

NO.	QTY	PART #	DESCRIPTION	NO.	QTY	PART #	DESCRIPTION
1	2	0411-1063	ROD, THREADED, 5/8-11 X 5	31	1	NNH3/8-16	NUT,HEX,3/8-16
2	1	1278-6160C	DUAL FOOT PEDAL ASSY	32	1	NNJ1/4-20	NUT, HEX, JAM, 1/4-20
3	1	1278-6689B	BRACKET, EYE MOUNT	33	4	NNSH5/8-11	NUT, SQUARE, 5/8-11
4	1	1975-412A	PLATE,NUT,4-40,.95CTC	34	3	SSFC98032	10-32 X 1/2 FLAT ALLEN CAP
5	2	3200194	HINGE MNT, SEWING HEAD	35	2	SSFS90048	#8-32 X 3/4 FLAT SLOT
6	2	3200196	MOUNT, MACHINE	36	8	SSHC01048	1/4-20 X 3/4 HEX CAP
7	2	3200197	MOUNT, MACHINE	37	4	SSHC10064	5/16-18 X 1 HHCS
8	1	3200198	PLATE, TOP	38	1	SSHC25144	3/8-16X2-1/4 HEX CAP SC
9	2	3200199	MOUNT, OIL PAN	39	4	SSPS50032	SCREW,2-56 x 1/2
10	1	3200200	SEWING HEAD ASSEMBLY	40	2	SSPS70048	4-40 X 3/4 PAN HD SLOTTED
11	1	3200208	BRACKET, TILT SUPPORT	41	2	SSPS98032	10-32X1/2 PAN HD SLOT
12	1	32006000	FRAME ASSY	42	2	SSSC01032	1/4-20X1/2 SOC CAP
13	1	32006005	PLATE, CLOSER STATION TOP	43	8	SSSC01192	1/4-20 X 3 SOC CAP
14	1	32006020	DOOR, REAR, LEFT	44	6	SSSC80024	6-32 X 3/8 SOC CAP SC
15	1	32006021	DOOR, RIGHT	45	2	SSSC98024	10-32 X 3/8 SOC CAP
16	1	32006022	PANEL	46	4	SSSC98048	10-32 X 3/4 SOC CAP
17	4	32006501	STAND-OFF, SUB-TABLE	47	12	SSSC98064	10-32 X 1 SOC CAP
18	2	32006504	SPACER, 3/4 OD X 1/4 ID	48	8	SSZS93032	SCREW, SHT.METAL 10 ZIP
19	1	32006512	COVER, BELT	49	2	WWF4	WASHER, FLAT, #4
20	1	32006513	SUPPORT, MATERIAL	50	26	WWFS1/4	WASHER,FLAT,SAE,1/4
21	1	32006521	BRKT, IDLER PULLEY	51	12	WWFS10	WASHER, FLAT, #10, SAE
22	1	4059-DC1500	MOTOR,DC WITH CONTROLLER	52	3	WWFS5/16	WASHER,FLAT,SAE,5/16
23	1	FFSM312LVQ	EYE,ELECTRIC,10-30VDC	53	6	WWFS6	WASHER, FLAT, #6
24	2	MM132-1496	PLUG 1 X 2	54	10	WWL1/4	WASHER,LOCK,1/4
25	2	MM40450010	FASTENER,SLIDE LOCK	55	12	WWL10	WASHER,LOCK,#10
26	2	MM431-4	CASTER,4",W/LOCKS	56	1	WWL3/8	WASHER, LOCK, 3/8
27	1	MMFS0127	TENSIONER,V-BELT	57	3	WWL5/16	WASHER, LOCK, 5/16
28	2	MML-2	LEVELING PAD, 5/8-11	58	6	WWL6	WASHER,LOCK,#6
29	1	MMLSSBB01210	FOAM, URETHANE, 1/8X1	59	1	ZX3851	V BELT,3/8 X 51"
30	8	NNE1/4-20	NUT,ELASTIC LOCK,1/4-20				

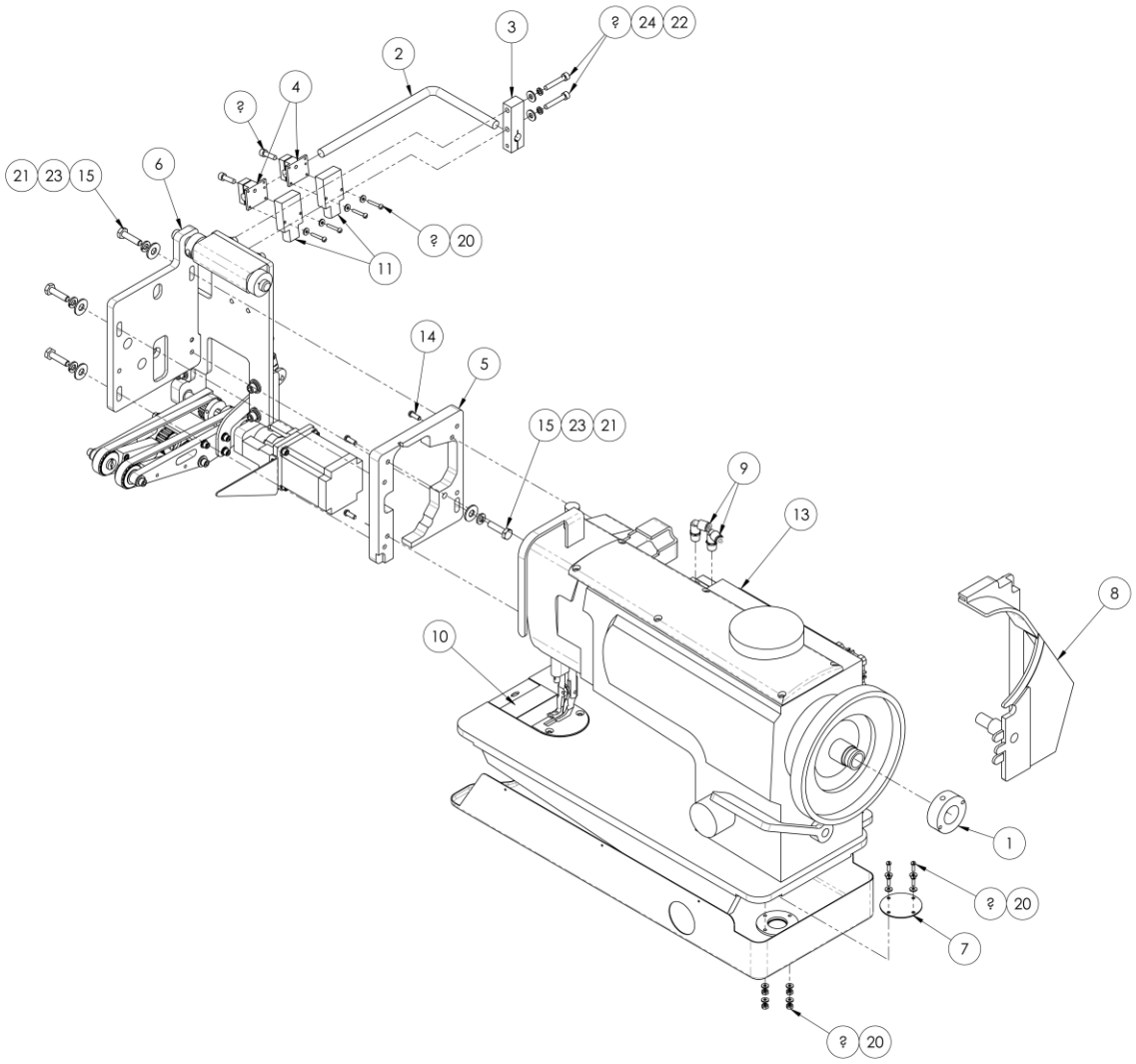

3200200 Sewing Head Assembly

AAC Drawing Number 3200200 Rev 0

NO.	QTY	PART #	DESCRIPTION	NO.	QTY	PART #	DESCRIPTION
1	1	1278-6364	DISC, TAPE MOUNTING	13	1	SJUKI-1541-7	SEWING HEAD,SN,LS,UF,UT
2	1	1335-316	ROD, SS, "L", 3/8, 4.0 X	14	1	SS4111215SP	SCREW, 11/64-40 X 12MM
3	1	23080	BLOCK,CLAMP,EYE	15	4	SSHC01064	1/4-20 X 1 HHCS
4	2	23132A	HOLDER, EYE	16	4	SSPS70048	4-40 X 3/4 PAN HD SLOTTED
5	1	3200187	SPACER, FACE PLATE	17	4	SSRS70024	4-40 X 3/8 RHS
6	1	3200195	FEED CONVEYOR ASSEMBLY	18	2	SSSC98040	10-32 X 5/8 SOC CAP
7	1	3200201	PLUG, OIL PAN	19	2	SSSC98072	10-32 X 1-1/8 SOC CAP
8	1	3200209	BELT GUARD MOD.	20	12	WWF4	WASHER, FLAT, #4
9	3	AAQME-5-8U	QUICK MALE ELBOW- UNIFIT	21	4	WWF1/4	WASHER, FLAT, 1/4", COM
10	1	EEFE-RR2	TAPE,REFLECTIVE,1" WIDE	22	2	WWFS10	WASHER, FLAT, #10, SAE
11	2	FFSM312LVQ	EYE,ELECTRIC,10-30VDC	23	4	WWL1/4	WASHER,LOCK,1/4
12	4	NNK4-40	KEP NUT, 1/4-20	24	2	WWL10	WASHER,LOCK,#10

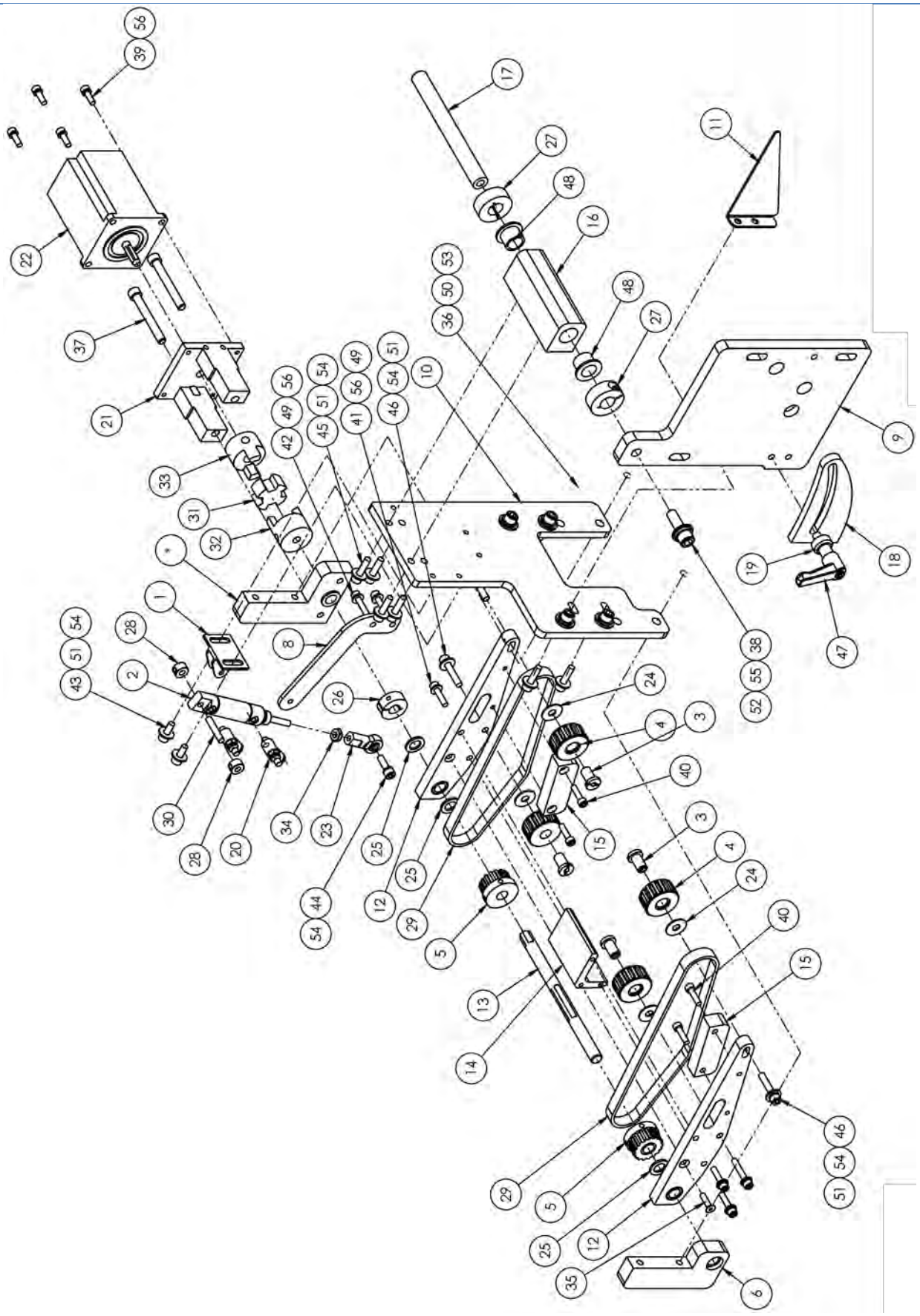

3200195 Feed Conveyor Assembly

AAC Drawing Number 3200195 Rev 3

NO.	QTY	PART #	DESCRIPTION	NO.	QTY	PART #	DESCRIPTION
1	1	011-070	PLATE,CYLINDER MOUNT	29	2	GGD160XL37	BELT,GEAR,DBL.
2	1	1975-213	CYLINDER,AIR,DA,9/16B,1/2S	30	1	IID012X064	DOWEL PIN,3/16 X 1
3	4	26179	BUSHING,IDLER,PULLEY	31	1	MML050	SPIDER, COUPLING
4	4	26183	PULLEY MOD, 18XLB037	32	1	MML050-250	COUPLING,1/4 BORE
5	2	311-3004A	PULLEY,GEAR,1/5 PITCH,16T	33	1	MML050-375	COUPLING,3/8 BORE
6	1	3200188	SUPPORT,PULLER, LH	34	1	NNJ10-32	NUT,JAM,THIN #10-32
7	1	3200189	SUPPORT,PULLER, RH	35	1	SSFC90040	8-32 x 2 FLAT ALLEN
8	1	3200191	LINK,PULLER PIVOT	36	4	SSSC01048	1/4-20 X 3/4" SOC CAP SC
9	1	3200192	PLATE, PIVOT, CONVEYOR	37	2	SSSC01128	1/4-20 X 2 SOC CAP
10	1	3200193	MOUNTING PLATE, CONVEYOR	38	1	SSSC10064	5/16-18X1 SOCKET CAP
11	1	3206024	GUIDE, LABEL	39	4	SSSC90032	#8-32 X 1/2 SOC CAP SC
12	2	32006555	ARM,PULLER	40	4	SSSC90040	8-32 X 5/8 SOC CAP SC
13	1	32006556	AXLE,UPPER BELT PULLER	41	3	SSSC90048	#8-32 X 3/4 SOC CAP SC
14	1	32006557	SPACER,ANGLE,ALUM	42	3	SSSC90064	#8-32 X 1 SOC CAP SC
15	2	32006558	SUPPORT,BELT	43	2	SSSC98032	10-32X1/2, SOC CAP
16	1	32007833	PIVOT BLOCK	44	1	SSSC98040	10-32 X 5/8 SOC CAP
17	1	32007834	PIVOT SHAFT	45	6	SSSC98048	10-32 X 3/4 SOC CAP
18	1	32007836	PIVOT LOCK PLATE	46	3	SSSC98064	10-32 X 1 SOC CAP
19	1	32007838	SPACER-PIVOT LOCK	47	1	TTH32415	HANDLE,THREADED,1/4-20X7/
20	2	AA198RA510	FLOW CONTROL,5/32X10-32	48	2	UUFF620-01	BRG,BRONZE,.502ID
21	1	AP-22E-101	MOTOR BRACKET	49	6	WWF8	WASHER, FLAT, #8
22	1	AP-22E-103	STEP MOTOR,MODIFIED	50	4	WWFS1/4	WASHER,FLAT,SAE,1/4
23	1	BBAW-3Z	BRG,ROD END,F, 10-32	51	11	WWFS10	WASHER, FLAT, #10, SAE
24	4	BBTRA411	WASHER,THRUST,STEEL	52	1	WWFS5/16	WASHER,FLAT,SAE,5/16
25	3	BBTT604	BEARING,BRONZE,.385ID	53	4	WWL1/4	WASHER,LOCK,1/4
26	1	CCCL6F	CLAMP COLLAR- 3/8	54	12	WWL10	WASHER,LOCK,#10
27	2	CCCL8F	CLAMP COLLAR- 1/2	55	1	WWL5/16	WASHER, LOCK, 5/16
28	2	CCSC33/16	COLLAR,SET,3/16"	56	10	WWL8	WASHER,LOCK,#8

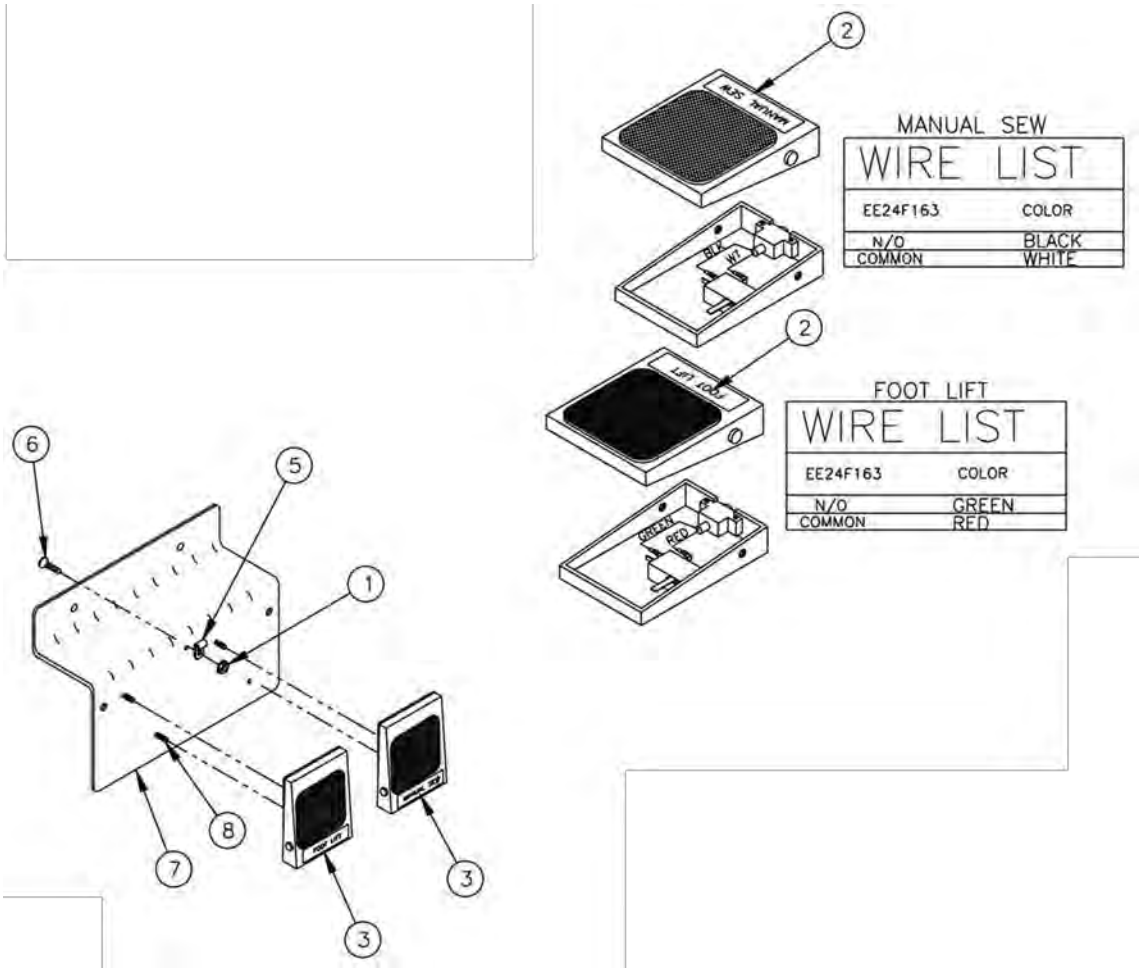

1278-6160C Dual Foot Pedal Assembly

AAC Drawing Number 191152B Rev6

NO.	QTY	PART #	DESCRIPTION
1	1	NNK6-32	Kep Nut
2	1	1278-5275	Label
3	2	1278-6161	Foot Switch
4	1	12788-502A	Cable
5	1	AAF1/8	Clamp
6	1	SSFC80024	Screw, Flat Allen
7	1	1278-5051A	Foot Pedal Plate
8	4	SSFC80016	Screw, Flat Allen

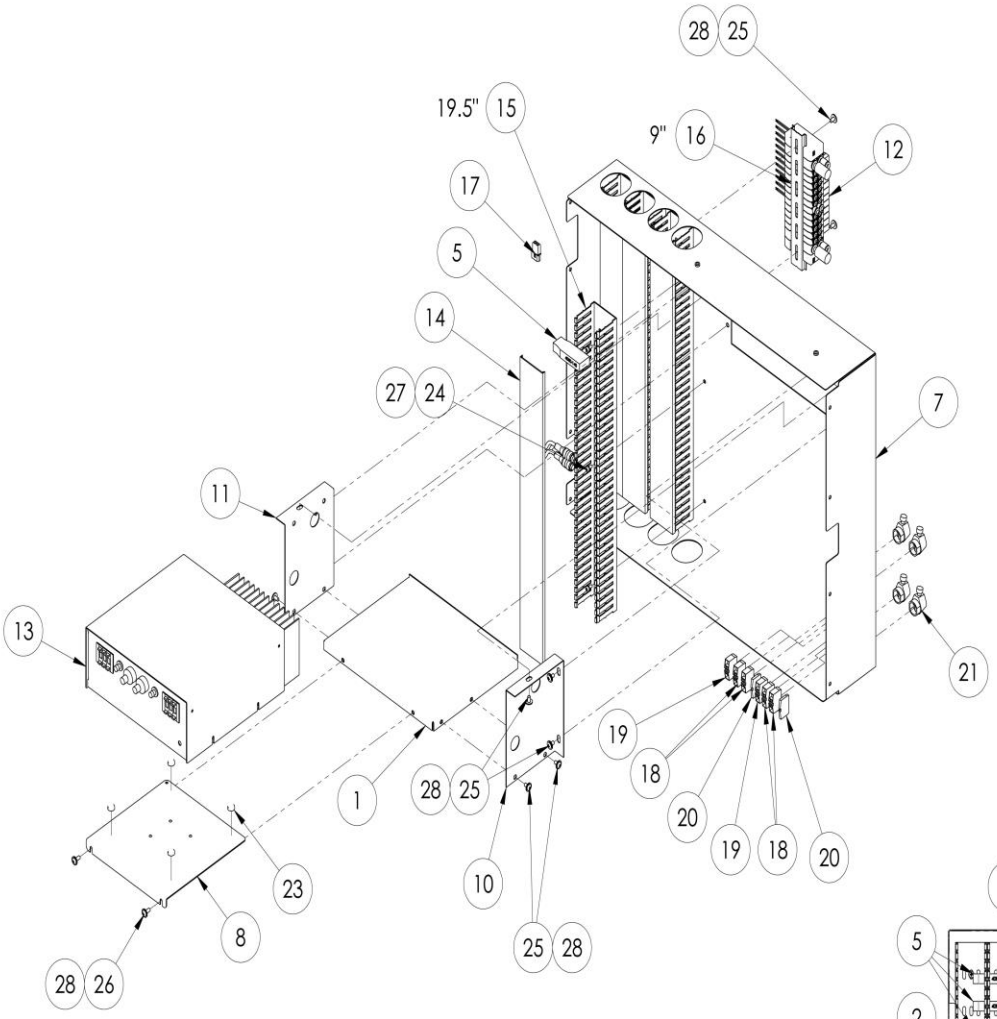

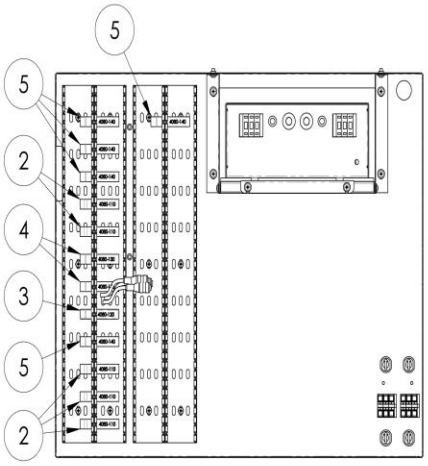

NOTE: SLOTS IN ITEM(S) 15 & 16 MUST BE SYMMETRICAL TO CUT LENGTH(S)

COVERS ITEM 14 NOT SHOWN FOR CLARITY

4300013 Control Panel Closer

AAC Drawing Number 4300013 Rev 0

NO	QTY	PART #	DESCRIPTION
1	1	0411-1503	SHELF MOTOR BOX
2	5	4080-110	MODULE,QUAD INPUT
3	1	4080-120	MODULE,DUAL OPTO-ISO
4	2	4080-130	MODULE,QUAD OPTO-ISO
5	5	4080-140	MODULE,QUAD OUTPUT
6	AR	4300-WD1	DIAGRAM,WIRING,CLOSER
7	1	4300012	CONTROL PANEL
8	1	4300072	BRKT,STEPPER BOX,SETBACK
9	*1	4300201	CABLE PACKAGE, 4300200
10	1	33009003	BRACE, LEFT SIDE
11	1	33009004	BRACE, RIGHT SIDE
12	1	AAE4300C	SOLENOID ASSY,12 STATION
13	1	AP-28-800WD	BOX,STEPPER,DUAL SLAVE
14	4.8 FT	EEDC2X2	COVER,WIRE DUCT
15	4.8 FT	EEDF2X2	DUCT,WIRE,2X2, MOD
16	9"	EETS35X7.5A	DIN RAIL-AMERICAN
17	1	FF59F1802	2 PIN MALE CONN.
18	4	FF264-341	TERMBLK,WAGO,TOP,DUAL,GRY
19	2	FF264-347	TERMBLK,WAGO,TOP,DUAL,GRN
20	2	FF264-371	TERMBLK,WAGO,TOP,END
21	4	FF1724	STRAIN RELIEF
22	*2	FF02092136	PIN,MALE,.093
23	4	MMSLD-ECH	1/2" DIA RUBBER BUMPER
24	12	SSPP90024	8-32X3/8 PAN PHLPS
25	12	SSPP98024	10-32 X 3/8 PAN HD PHILIP
26	2	SSPP98032	10-32 X 1/2 PAN PHIL
27	12	WWF8	WASHER, FLAT, #8
28	14	WWFS10	WASHER, FLAT, #10, SAE

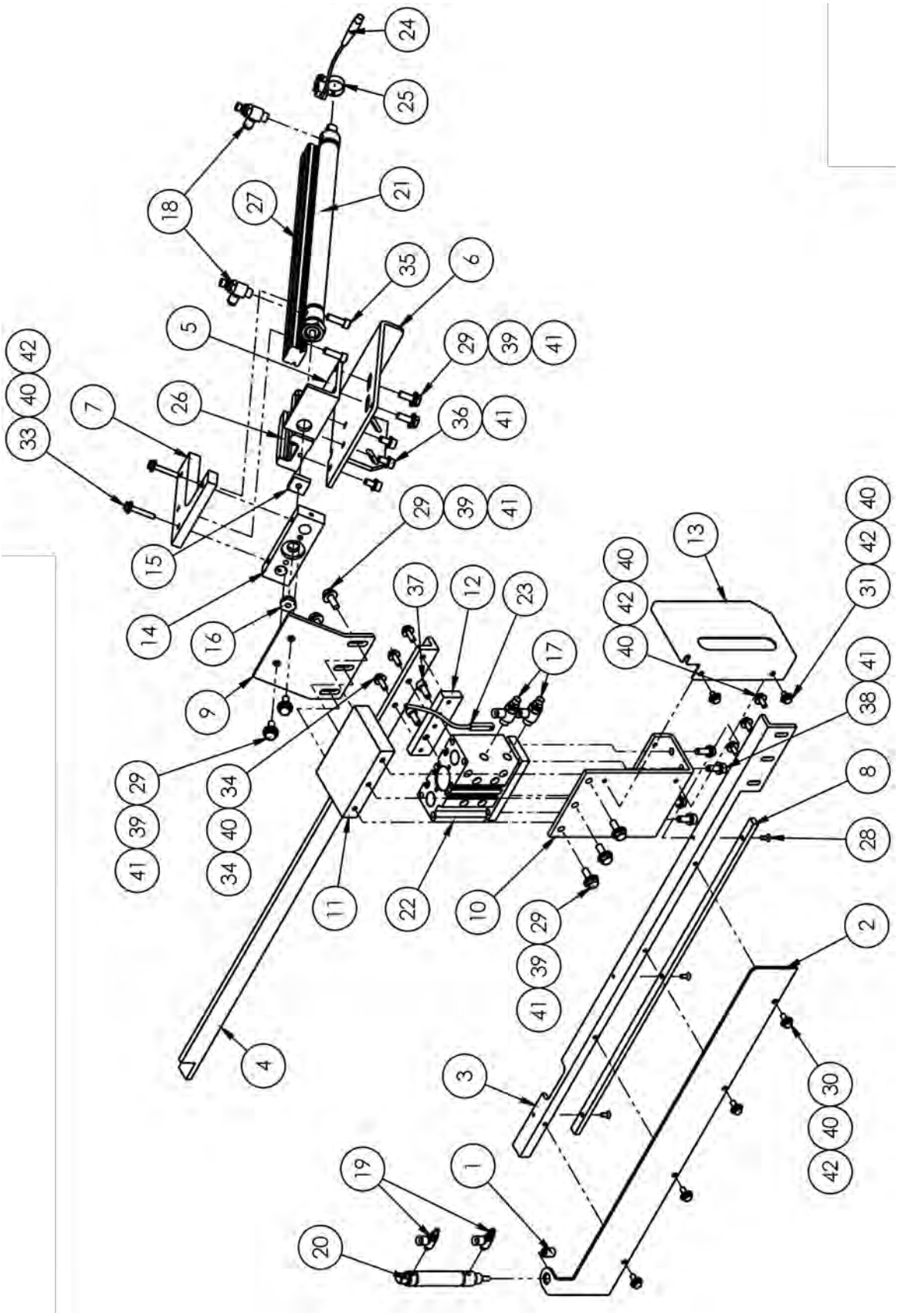
24
25
18
27
21
35
6
5
29
39
41
42
40
33
7
26
36
41
29
39
41
15
14
16
37
12
23
17
13
40
42
40
31
41
38
9
29
39
41
34
40
34
8
28
11
22
10
29
39
41
2
4
3
30
40
42
19
1
20

4300327 Primary Gripper Assembly

AAC Drawing Number 4300327 Rev 1

NO.	QTY	PART #	DESCRIPTION
1	1	1510-09	BUMPER
2	1	4300328	GRIPPER PLATE, END
3	1	4300329	CLAMP, PRIM GRIPPER,LOWER
4	1	4300330	CLAMP, PRIM GRIPPER,LOWER
5	1	4300331	MOUNT, CYLINDER
6	1	4300332	BRKT. SIDE MOUNTING
7	1	4300333	BRACKET, SLIDE ADAPTOR
8	1	4300334	SPACER,PRIMARY GRIPPER
9	1	32004104	MOUNT, PRIMARY GRIPPER
10	1	32004109	MOUNT, PRIMARY GRIP. CYL.
11	1	32004113	BLOCK, ADAPTOR
12	1	32004114	MOUNT, PRIM GRIP. UPPER
13	1	32004115	GUARD, PRIMARY GRIPPER
14	1	32007224	PLATE,SUPPORT,ROD
15	1	97-6282	NUT,FLOATING COUPLING
16	1	97-6290	NUT,LOCK,5/8 HEX,1/4-28
17	2	AA198-2201	FLOW CONTROL,1/8PTX5/32
18	2	AA198RA508	FLOW CONTROL,5/32 X 1/8"
19	2	AA198RA510	FLOW CONTROL,5/32X10-32
20	1	AAC8DP-1.5	CYL, AIR, DA, 9/16B, 2S
21	1	AACM0410DXP	CYLINDER,AIR,3/4 BORE
22	1	AACMGPM2530	CYLINDER,AIR,DUAL ROD
23	1	AAEDY59A-3M	SENSOR W/ PLUG
24	1	AAEHSKQ	SWITCH,HALL EFFECT(SMC)
25	1	AAFD35000	BAND,UNIVERSAL,AAEHSKQ
26	1	MMAGH25CAN	LINEAR BEARING
27	1	MMAGR25360N	RAIL,LINEAR,AG SERIES
28	3	SSFC80024	6-32 X 3/8 FLAT CAP
29	10	SSHC01048	1/4-20 X 3/4 HEX CAP
30	4	SSHC95032	SCREW, HEX CAP
31	2	SSHC98024	10-32 X 3/8 HEX CAP
32	3	SSHC98032	10-32X1/2 HEX HD
33	2	SSHC98080	#10-32 X 1-1/4 HEX CAP
34	3	SSPS95040	#10-24 X 5/8 PAN HD SLTD
35	2	SSSC01048	1/4-20 X 3/4" SOC CAP SC
36	3	SSSCM6X12	M6X12 SOC CAP SCREW
37	2	SSSCM6X15	M6X15 SOC CAP SCREW
38	4	SSSCM6X16	M6X16 SOC CAP SCREW
39	10	WWFS1/4	WASHER,FLAT,SAE,1/4
40	14	WWFS10	WASHER, FLAT, #10, SAE
41	17	WWL1/4	WASHER,LOCK,1/4
42	14	WWL10	WASHER,LOCK,#10

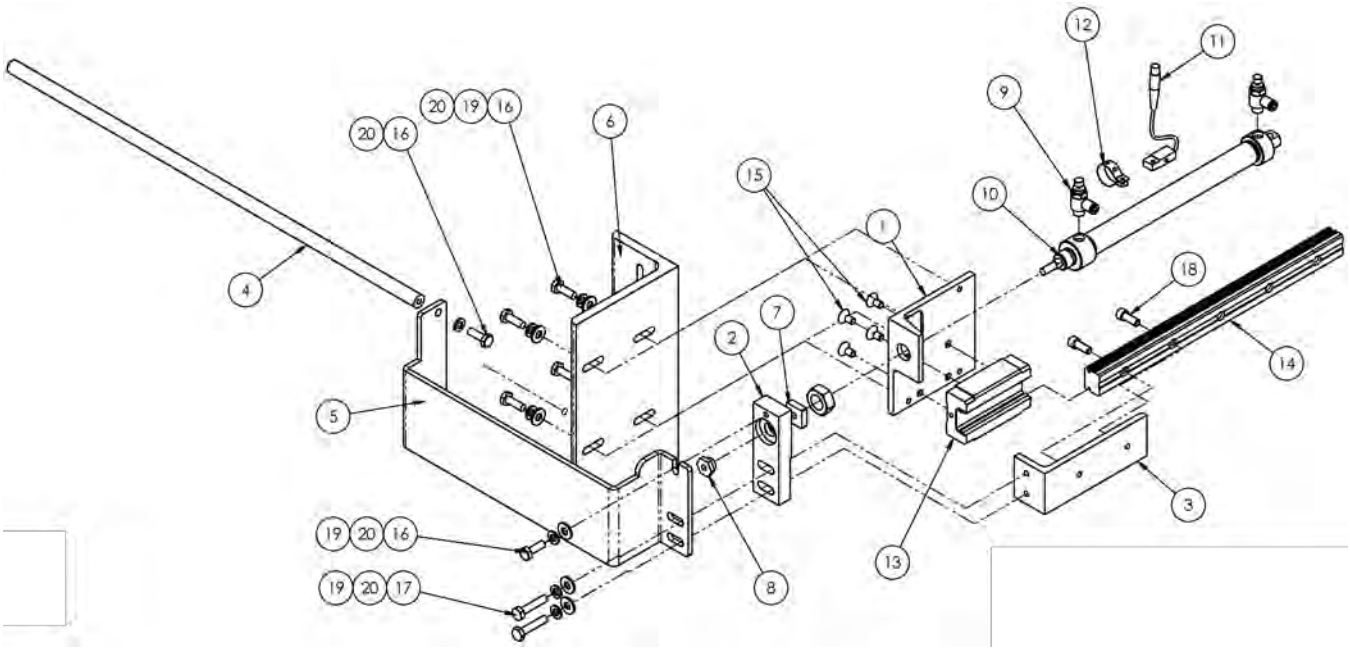

4300335 Border Support Assembly

AAC Drawing Number 4300335 Rev 0

NO.	QTY	PART #	DESCRIPTION
1	1	3300087	BODY,SLIDE
2	1	3300088	PLATE,SUPPORT,ROD
3	1	3300089	BODY,SLIDE
4	1	4300336	ROD, .50 DIA X 20.0 L
5	1	4300337	MOUNT, BORDER SUPPORT
6	1	4300338	MOUNT, BORDER SUPPORT
7	1	97-6282	NUT,FLOATING COUPLING
8	1	97-6290	NUT,LOCK,5/8 HEX,1/4-28
9	2	AA198RA508	FLOW CONTROL,5/32 X 1/8"
10	1	AACMRS046DXPB	CYLINDER,AIR W/BUMPERS
11	1	AAEHSKQ	SWITCH,HALL EFFECT(SMC)
12	1	AAFD35000	BAND,UNIVERSAL,AAEHSKQ
13	1	MMAGH25CAN	LINEAR BEARING
14	1	MMAGR25303N	RAIL,LINEAR,AG SERIES
15	4	SSFCM6X12	SCREW,FLAT ALLEN CAP
16	6	SSHC01048	1/4-20 X 3/4 HEX CAP
17	2	SSHC01080	1/4-20 X 1-1/4 HHCS
18	2	SSSC01040	1/4-20 X 5/8" SOC CAP SC
19	7	WWFS1/4	WASHER,FLAT,SAE,1/4
20	8	WWL1/4	WASHER,LOCK,1/4

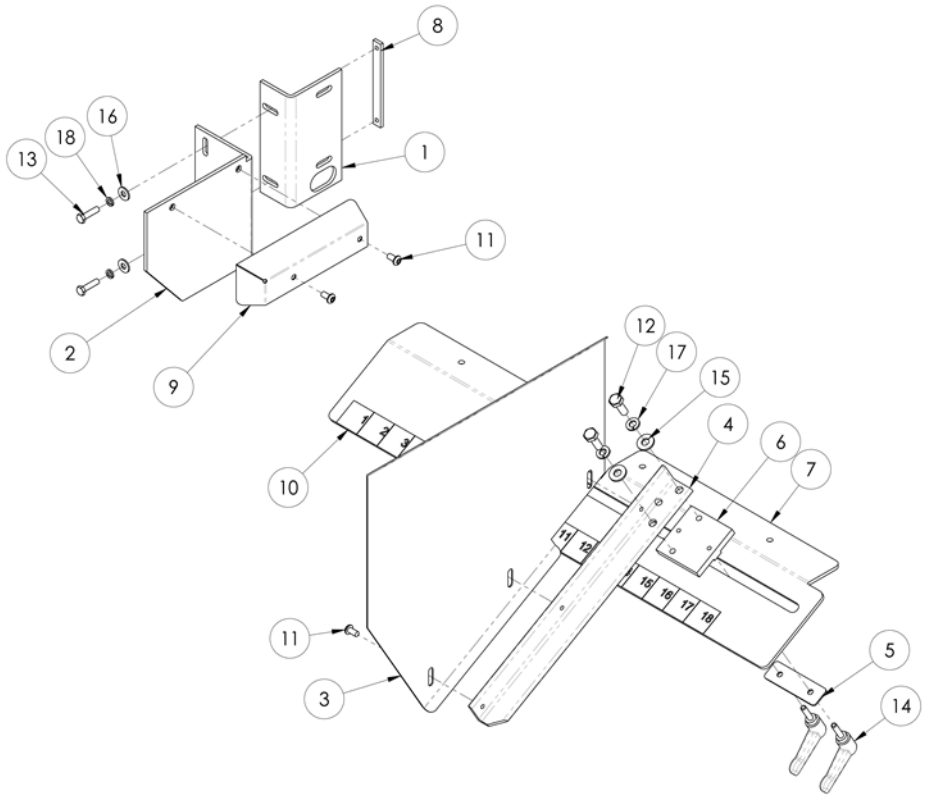

4300339 Edge Guide Assembly

AAC Drawing Number 4300339 Rev 0

NO	QTY	PART #	DESCRIPTION
1	1	3200105	SUPPORT, FIXED GUIDE
2	1	3200107	MOUNT, FIXED GUIDE
3	1	3200108	GUIDE, MOVEABLE
4	1	3200109	MOUNT, MOVEABLE GUIDE
5	1	3200110	PLATE,WASHER (2) .203 DIA
6	1	3200113	BLOCK, SUPPORT
7	1	4300340	PLATE, GUIDE BASE
8	1	32003016	PLATE,NUT
9	1	32007506	GUIDE,FIXED EDGE
10	1	MM1910A43M	RULER,SILVER MYLAR 36"
11	5	SSBC98024	10-32 X 3/8 BUTTON CAP SC
12	2	SSHC01048	1/4-20 X 3/4 HEX CAP
13	2	SSHC98048	SCREW, HEX CAP #10-32X.75
14	2	TTH34311	HANDLE,THREADED,10-24X3/4
15	2	WWFS1/4	WASHER,FLAT,SAE,1/4
16	2	WWFS10	WASHER, FLAT, #10, SAE
17	2	WWL1/4	WASHER,LOCK, 1/4
18	2	WWL10	WASHER,LOCK,#10

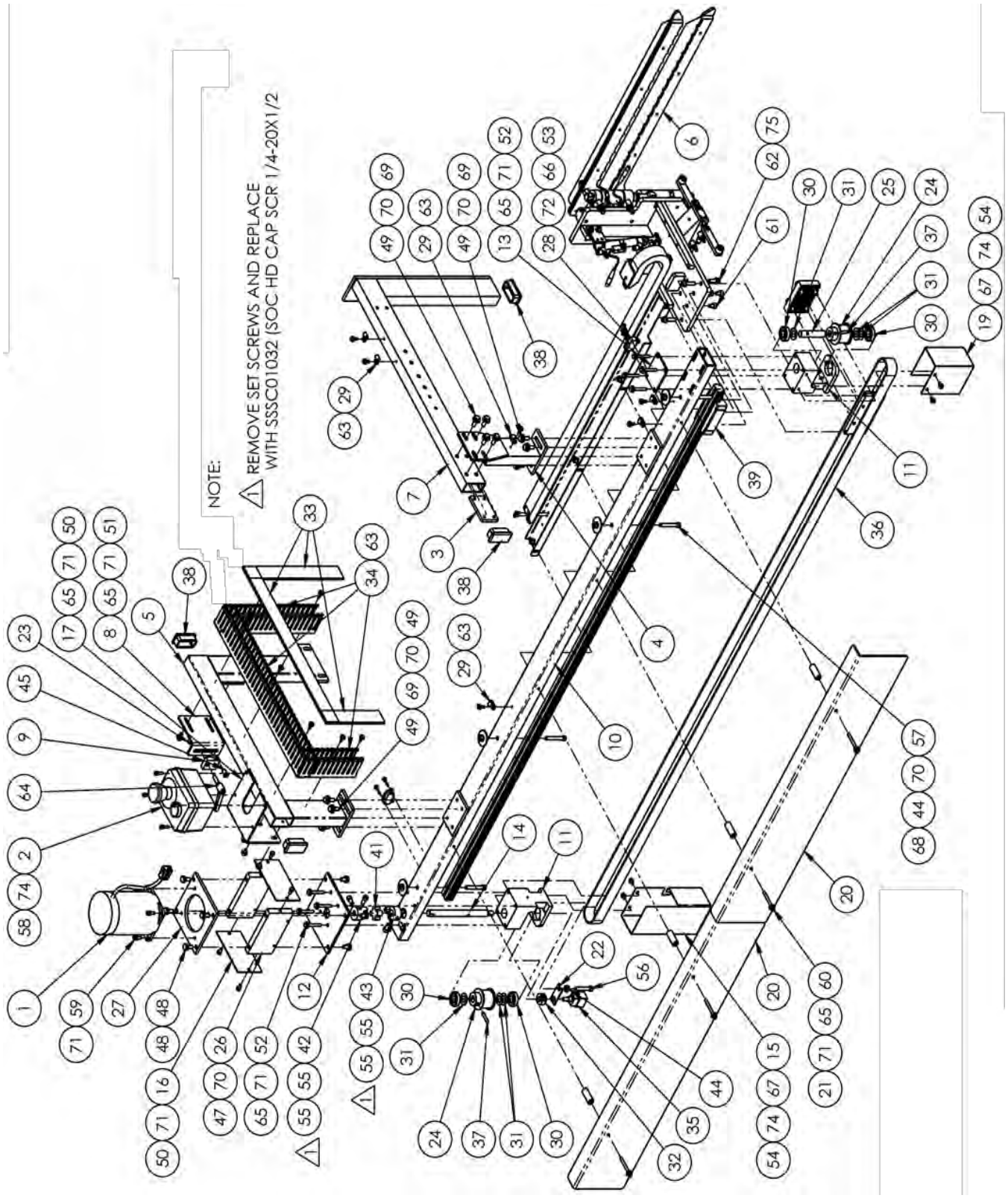
NOTE:
1 REMOVE SET SCREWS AND REPLACE WITH SSSC01032 (SOC HD CAP SCR 1/4-20X1/2

4300341 Secondary Clamp/Transport

AAC Drawing Number 4300341 Rev 1

NO.	QTY	PART #	DESCRIPTION	NO.	QTY	PART #	DESCRIPTION
1	1	011-020	MOTOR, STEPPER W/PLUG	39	1	MMAGH25CAN	LINEAR BEARING
2	1	1278-6010A	START/STOP BUTTON ASSY	40	1	MMAGR251430	RAIL,LINEAR, AG SERIES
3	1	3200095	PLATE,NUT,1/4-20,4 PL	41	1	MML050	SPIDER, COUPLING
4	1	3200101	WELDMENT,CARRIAGE MOUNT	42	1	MML050-375	COUPLING,3/8 BORE
5	1	32007628A	CARRIAGE MOUNTING BRACKET	43	1	MML050-500	COUPLING,1/2"BORE
6	1	32007800A	SECONDARY GRIPPER ASSY	44	5	NNH1/4-20	NUT,HEX,1/4-20
7	1	4300342	CARRIAGE MOUNT ARM	45	1	SSBC01032	1/4-20 X 1/2 BUT CAP SC
8	1	32006518	CLAMP BRKT. EDGE GUIDE	46	2	SSBC80024	6-32 X 3/16 BUT HEAD
9	1	32006534	CLAMP, EDGE GUIDE	47	4	SSHC01032	1/4-20 X 1/2 HHCS
10	1	32007602	RAIL MOUNT WELDMENT	48	4	SSHC01040	1/4-20 X 5/8 HHCS
11	2	32007605	BRKT,PULLEY	49	12	SSHC01048	1/4-20 X 3/4 HEX CAP
12	1	32007607	BRKT, MOUNTING, STPPR MTR	50	11	SSHC98024	10-32 X 3/8 HEX CAP
13	1	32007610	PLATE,BACKING	51	2	SSHC98032	10-32X1/2 HEX HD
14	1	32007615	SHAFT, DRIVE	52	8	SSHC98096	#10-32 X 1-1/2 HEX CAP
15	1	32007645	COVER,ENCODER & PULLEY	53	4	SSPS70048	4-40 X 3/4 PAN HD SLOTTED
16	2	32007646	COVER, COUPLING	54	4	SSPS90024	#8-32 X 3/8 LG PAN HD
17	1	32007654	PLATE,MOUNTING PAUSE	55	4	SSSC01032	1/4-20X1/2 SOC CAP
18	1	32007656	TRAY,CABLE TRACK	56	1	SSSC01096	1/4-20 X 1-1/2 SOC CAP
19	1	32007658	COVER,PULLEY	57	4	SSSC01112	1/4-20 X 1-3/4 SOC CAP
20	2	32007660	GUARD, BELT	58	4	SSSC90040	8-32 X 5/8 SOC CAP SC
21	4	32007661	SPACER, BELT GUARD	59	4	SSSC98032	10-32X1/2, SOC CAP
22	1	33004080	BRKT,ENCODER SUPPORT	60	4	SSSC98112	SCR, SOC CAP 10-32 X 1-3/4
23	1	84-4005	NUT PLATE,1/4-20, 1.25CTC	61	2	SSSCM6X10	M6X10 SOC CAP SCREW
24	2	98203012	PULLEY,12 T	62	2	SSSCM6X20	SCREW, SOCKET CAP
25	1	98203013	SHAFT,IDLER PULLEY	63	13	SSZS93032	SCREW, SHT.METAL 10 ZIP
26	2	98203015A	MOUNT,MOTOR	64	1	TTH32415	HANDLE,THREADED,1/4-20X7/
27	1	98203024	PLATE, MOTOR MOUNT	65	21	WWF10	WASHER, FLAT, #10, COM
28	2	A-2014-39	MICRO SWITCH MODIFIED	66	4	WWF4	WASHER, FLAT, #4
29	6	AAF3/16	CLAMP, BLACK PLASTIC	67	4	WWF8	WASHER, FLAT, #8
30	4	BB1L005	BEARING,BALL,.500D	68	4	WWFE016	WASHER,FENDER,LARGE,1/4
31	6	BBTRA815	WASHER,THRUST,STEEL 1/2	69	12	WWFS1/4	WASHER,FLAT,SAE,1/4
32	1	CCCL6F	CLAMP COLLAR- 3/8	70	24	WWL1/4	WASHER,LOCK,1/4
33	3	EEDC1LG	DUCT,WIRE COVER,1"	71	29	WWL10	WASHER,LOCK,#10
34	3	EEDF1X2	DUCT,WIRE,1X2	72	4	WWL4	WASHER,LOCK,#4
35	1	EENC256	ENCODER,SBUS,256,1/4	73	2	WWL6	WASHER,LOCK,#6
36	1	GG1252L100ST	BELT,GEAR,3/8P,1"W	74	9	WWL8	WASHER,LOCK,#8
37	2	IIS012X064	SPRING PIN 3/16 DIA X 1LG	75	2	WWLM6	M6 LOCK WASHER
38	5	MM132-1496	PLUG 1 X 2				

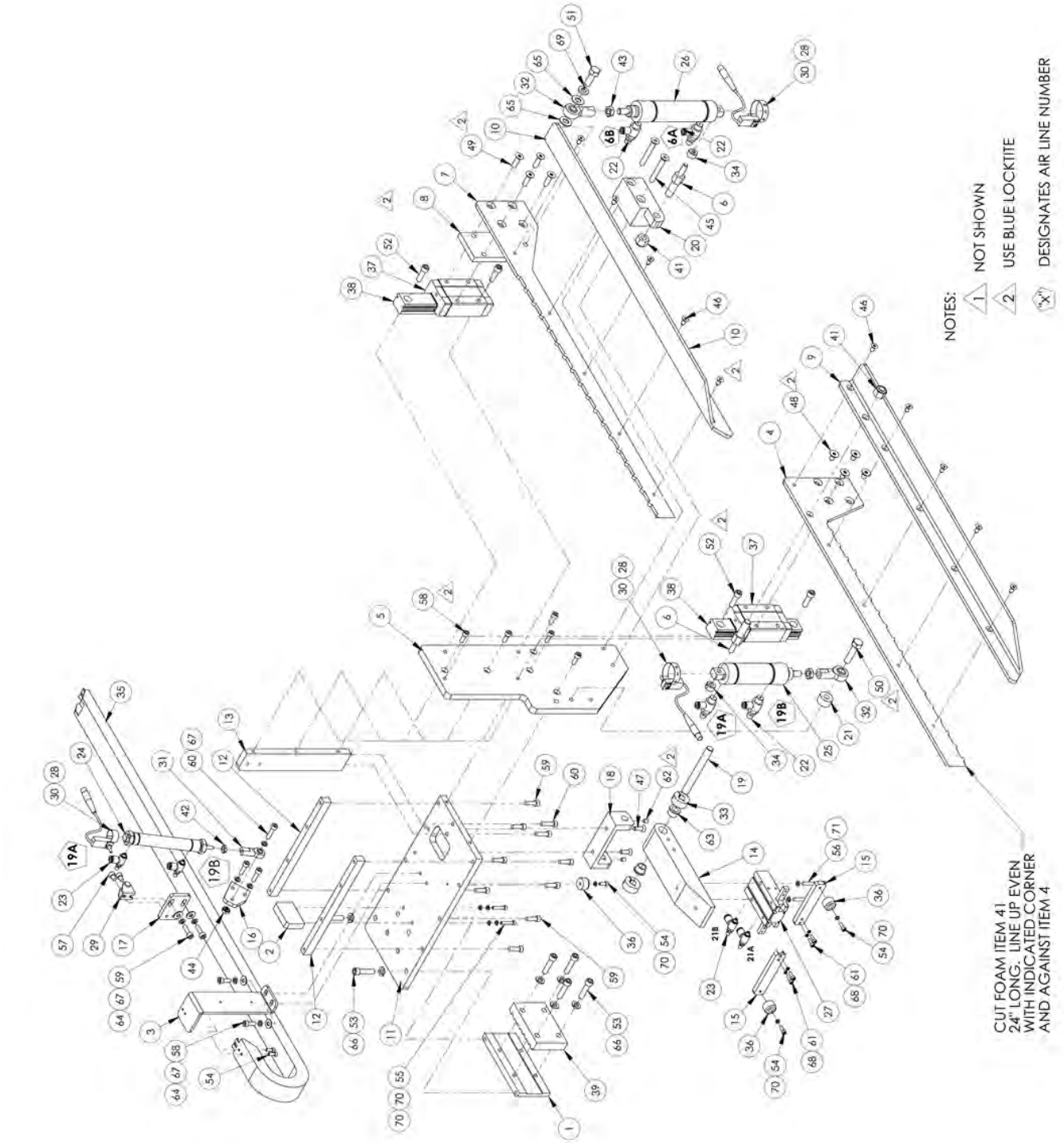
NOTES:
1 NOT SHOWN
2 USE BLUE LOCKTITE
"X" DESIGNATES AIR LINE NUMBER
CUT FOAM ITEM 41
24" LONG. LINE UP EVEN
WITH INDICATED CORNER
AND AGAINST ITEM 4

32007800A Secondary Gripper Assembly

AAC Drawing Number 9002088 Rev 5

NO	QTY	PART #	DESCRIPTION	NO	QTY	PART #	DESCRIPTION
1	1	32007611	BELT HOLDER	37	2	MMAGH25CAN	LINEAR BEARING
2	1	32007622	FLAG,CRASH SWITCH	38	2	MMAGR25139N	RAIL LINEAR AG
3	1	32007657	MOUNT, CABLE TRACK	39	1	MMCPL100	BELT CLAMP
4	1	32007801	TOP CLAMP MTG PLT.	40	*24"	MMLSSBB01210	FOAM, URETHANE, 1/8X1
5	1	32007802	MAIN MTG PLATE	41	2	NNE3/8-16	NUT, ELASTIC 3/8-16
6	2	32007804	STUD, CLAMP CYLINDER	42	1	NNJ10-32	NUT,JAM,THIN #10-32
7	1	32007805	BOTTOM CLAMP MTG PLT.	43	2	NNJ5/16-24	NUT,JAM,5/16-24
8	1	32007806	SPACER BOTTOM CLAMP	44	1	NNK10-32	KEP NUT, 10-32
9	1	32007807	CLAMP, UPPER PRIMARY	45	2	SSFC01112	1/4-20 X 1-3/4 FLAT CAP
10	1	32007808	CLAMP, LOWER PRIMARY	46	10	SSFC98024	#10-32 X .375 FLAT CAP
11	1	32007810	BASE PLATE, CLAMP ASSY	47	2	SSFC98040	#10-32 X 5/8 FLAT ALLEN
12	2	32007811	RAIL, PLATE STIFFNER	48	4	SSFCM6X10	M6 X 20 FLAT ALLEN
13	1	32007812	GUSSET, MTG PLATE	49	4	SSFCM6X20	M6 X 20 FLAT ALLEN
14	1	32007815	GRIPPER PIVOT PLT	50	1	SSHC10080	5/16-18 X 1-1/4 HHCS
15	2	32007816	GRIPPER JAW	51	1	SSHC20056	5/16-24 X 7/8 HEX CAP
16	1	32007819	CLAMP PIVOT CYL,ROD PLT	52	4	SSSC01048	1/4-20 X 3/4" SOC CAP SC
17	1	32007820	PIVOT CYL, MTG PLT	53	6	SSSC01064	1/4-20 X 1 SOC CAP
18	1	32007821	PIVOT YOKE	54	5	SSSC80024	6-32 X 3/8 SOC CAP SC
19	1	32007822	PIVOT SHAFT	55	2	SSSC80048	6-32 X 3/4 SOC CAP SC
20	1	32007828	BOTTOM CLAMP CYL. MTG. PL	56	2	SSSC90080	#8-32 X 1-1/4 SOC CAP SC
21	1	32007829	SPACER, CYL MNT	57	2	SSSC98016	10-32 X 1/4 SOC CAP
22	4	AA198RA508	FLOW CONTROL,5/32 X 1/8"	58	7	SSSC98032	10-32X1/2, SOC CAP
23	4	AA198RA510	FL CONT,5/32X10-32	59	12	SSSC98040	10-32 X 5/8 SOC CAP
24	1	AACM022DXP	CYLINDER, 9/16B,2S, MAGNETIC	60	3	SSSC98048	10-32 X 3/4 SOC CAP
25	1	AACM091DX	CYLINDER, 1 1/16B, 1"S, DXM	61	4	SSSCM3X10	M3-0.5X10, SOCKET CAP
26	1	AACM092DX	CYLINDER, 1 1/16B, 2"S, D	62	2	SSSS98016	SCREW,SKT SET,FLAT POINT
27	1	AACMHY-16D	GRIPPER CYL, 180DEG, 16MM	63	2	UUFF520-10	BRG,BRONZE,.3765ID
28	3	AAEHSKQ	SWITCH,HALL EFFECT(SMC)	64	4	WWF10	WASHER, FLAT, #10, COM
29	1	AAFBP-8C	BRKT,PIVOT,5/32 BORE	65	2	WWFS5/16	WASHER,FLAT,SAE,5/16
30	3	AAFD35000	BAND,UNIVERSAL,AAEHSKQ	66	6	WWL1/4	WASHER,LOCK, 1/4
31	1	BBAW-3Z	BRG,ROD END,F, 10-32	67	9	WWL10	WASHER,LOCK,#10
32	2	BBAW-5Z	ROD END, SPHERICAL .5/16ID	68	4	WWL4	WASHER,LOCK,#4
33	2	CCCL6F	CLAMP COLLAR- 3/8	69	1	WWL5/16	WASHER,LOCK, 5/16
34	2	CCSC41/4	COLLAR,SET 1/4"	70	7	WWL6	WASHER,LOCK,#6
35	1	MM18222844	DUCT,WIRE MICROTRAK	71	2	WWL8	WASHER,LOCK,#8
36	3	MM9540K53	BUMPER, 3/4 DIA				

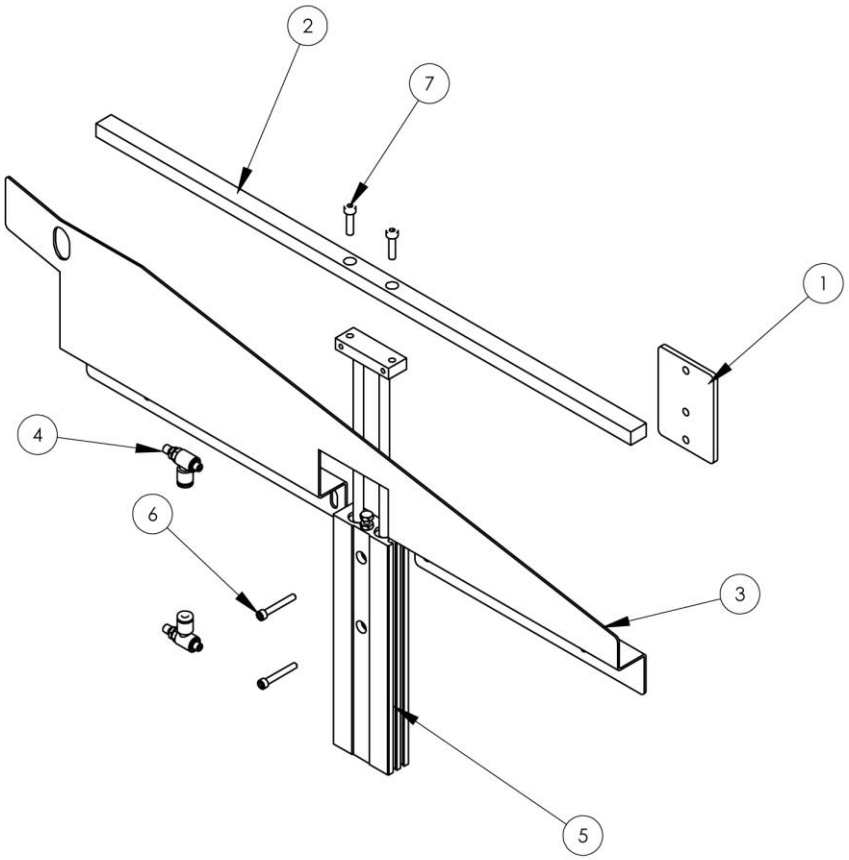

4300350 Guillotine Bridge Assembly

AAC Drawing Number 4300350 Rev 0

NO	QTY	PART #	DESCRIPTION
1	1	3200138	SPACER, 1/4 @ 50MMCTC
2	1	4300351	BRIDGE, BORDER
3	1	4300352	SUPPORT, BORDER
4	2	AA198RA510	FL CONT,5/32X10-32
5	1	AACTB12110	CYLINDER,AIR,DUAL ROD
6	2	SSSC80064	6-32 X 1 SOC CAP SC
7	2	SSSCM4X16	SCREW,SOCKET CAP

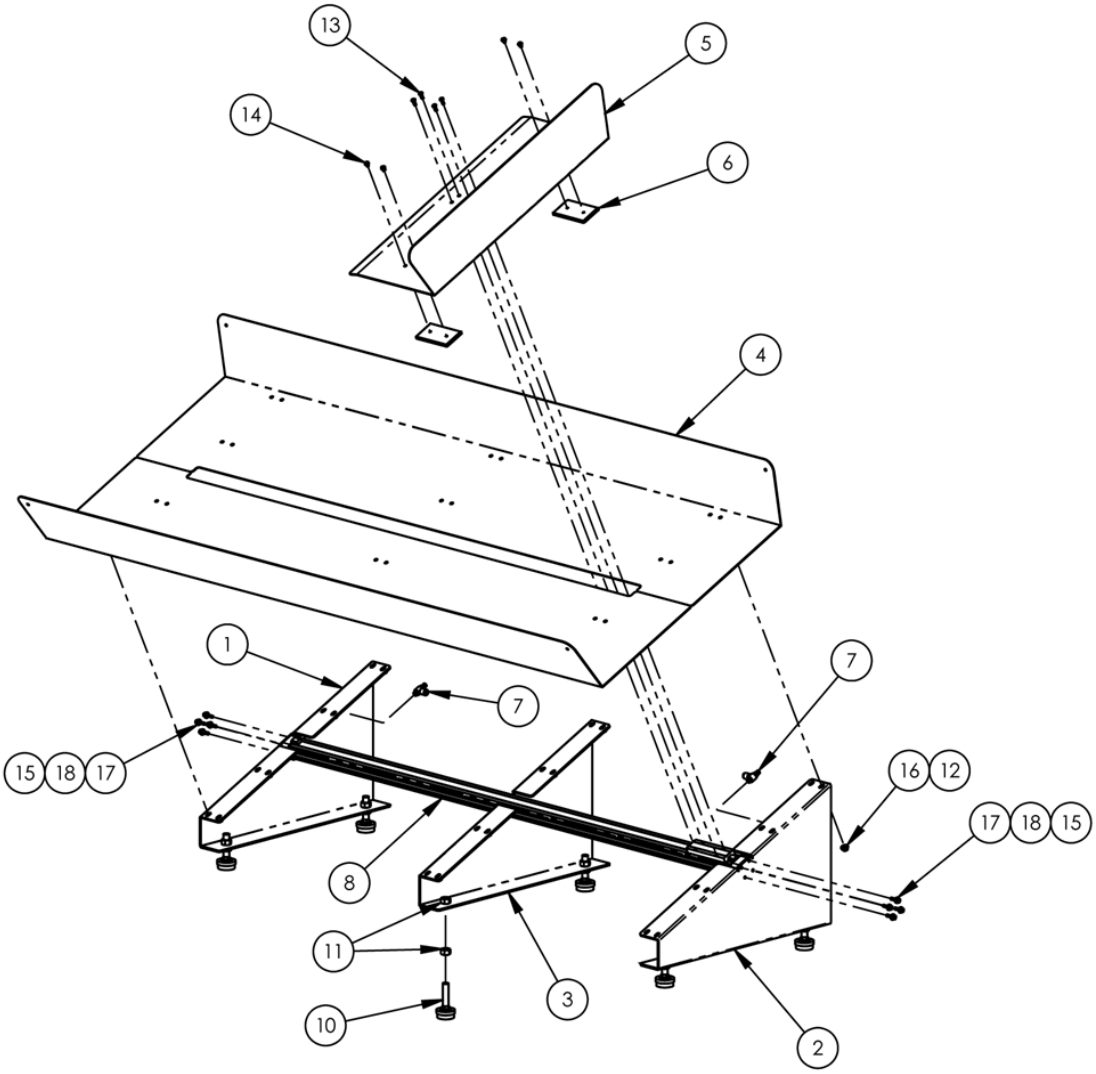

4300390 Indexing Tray Assembly

AAC Drawing Number 4300390 Rev 0

NO.	QTY	PART #	DESCRIPTION	NO.	QTY	PART #	DESCRIPTION
1	1	4300379	MOUNT, FOOT, LEFT	10	6	MMFB4444	FOOT, RUBBER
2	1	4300381	MOUNT, FOOT, RIGHT	11	12	NNH1/2-13	NUT,HEX,1/2-13
3	1	4300382	MOUNT, FOOT, CENTER	12	24	NNK1/4-20	NUT,HEX,KEP,1/4-20,W/LOCK
4	2	32007301	TRAY, INDEXING	13	4	SSBC98032	10-32 X 1/2 BUTTON CAP SC
5	1	32007302	PUSHER, INDEXER	14	4	SSPS95016	#10-24 X 1/4 PAN HD SLTD
6	2	32007303	WEAR PAD	15	8	SSSCM5X20	M5-0.8X20,SCREW,SOCKET CA
7	2	AA198RA408U	FLOW CONTROL,RC 1/8X1/4	16	24	WWFS1/4	WASHER,FLAT,SAE,1/4
8	1	AACSRLM048	CYLINDER,AIR,RODLESS,48ST	17	8	WWFS10	WASHER, FLAT, #10, SAE
9	* 18 FT	MM100-1/8	DOOR TRIM - BLACK	18	8	WWL10	WASHER,LOCK,#10

4300-PD Pneumatic Diagram

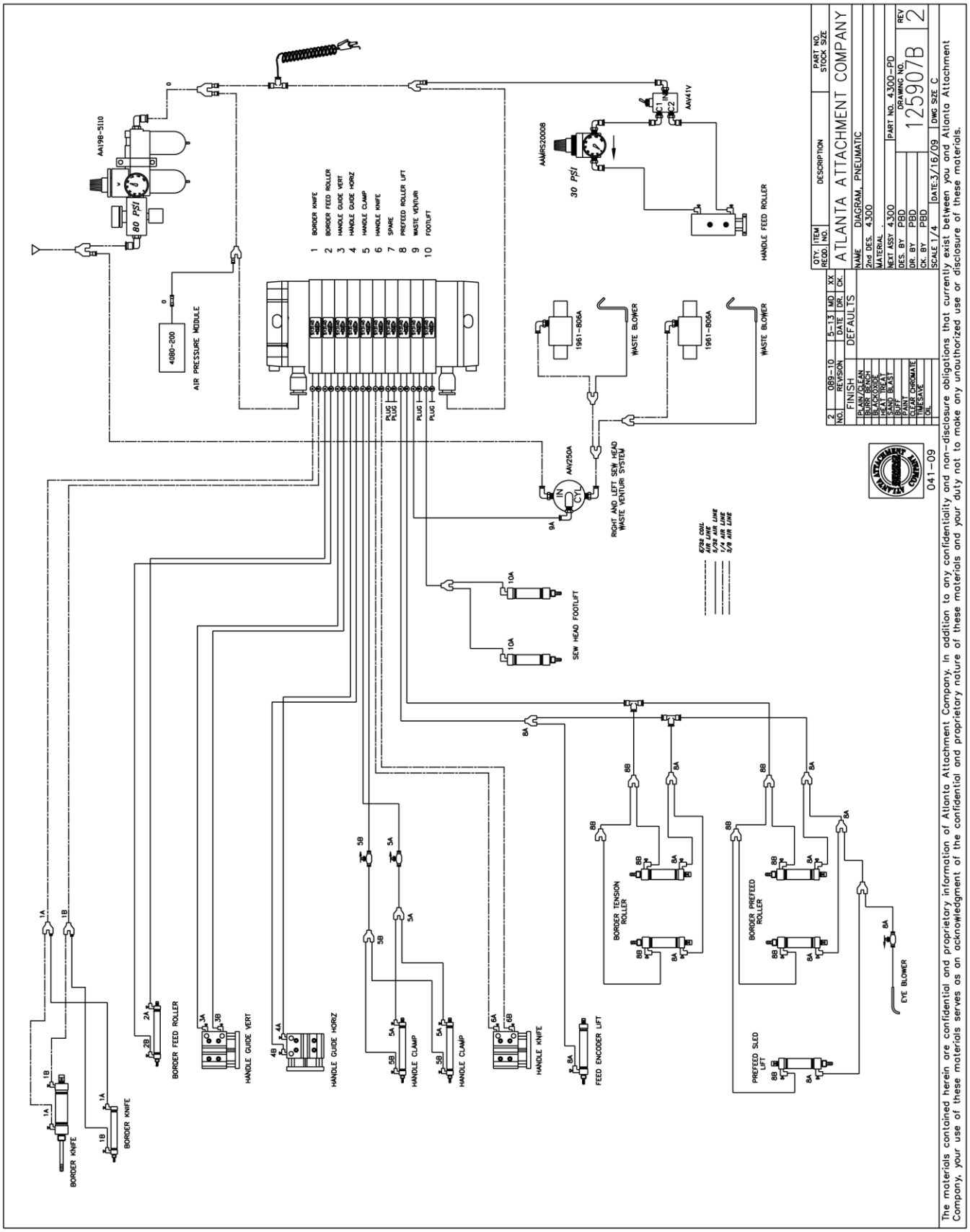

4300-PD1 Pneumatic Diagram, Closer

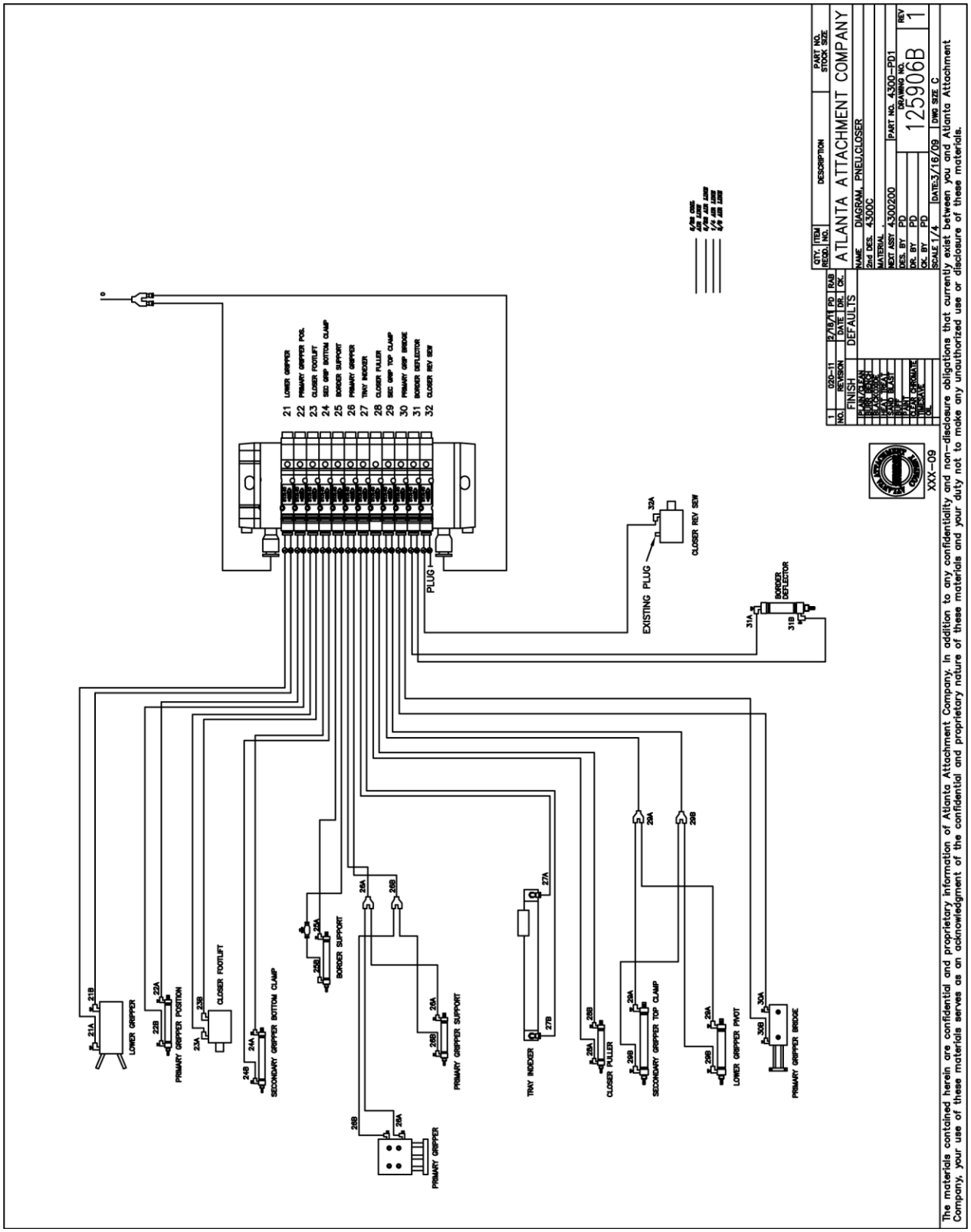

4300-WD Wiring Diagram

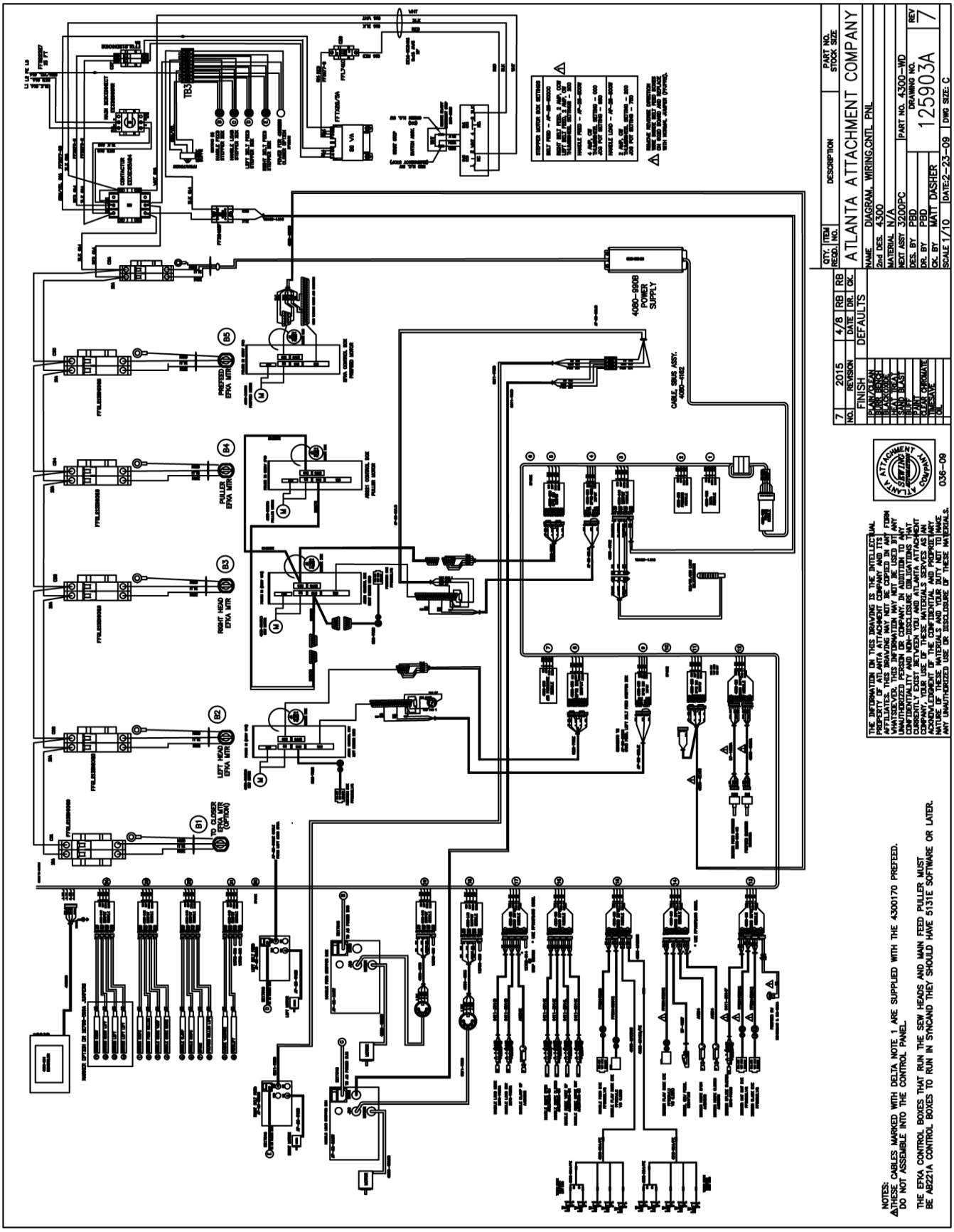

4300-WD1 Wiring Diagram, Closer

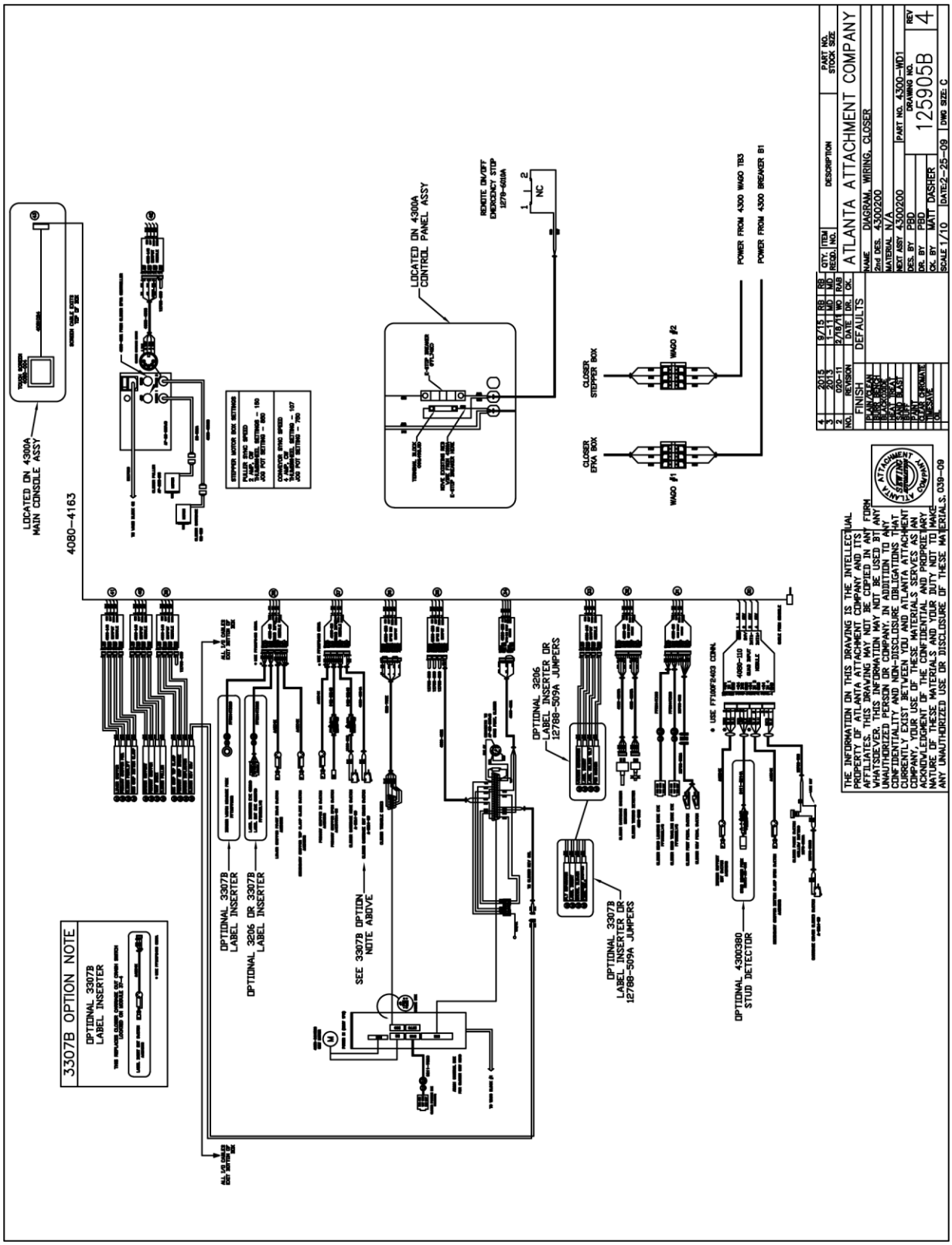

Atlanta Attachment Company (AAC) Statement of Warranty

Manufactured Products

Atlanta Attachment Company warrants manufactured products to be free from defects in material and workmanship for a period of eight hundred (800) hours of operation or one hundred (100) days whichever comes first. Atlanta Attachment Company warrants all electrical components of the Serial Bus System to be free from defects in material or workmanship for a period of thirty six (36) months.

Terms and Conditions:

- AAC Limited Warranty becomes effective on the date of shipment.
- AAC Warranty claims may be made by telephone, letter, fax or e-mail. All verbal claims must be confirmed in writing.
- AAC reserves the right to require the return of all claimed defective parts with a completed warranty claim form.
- AAC will, at its option, repair or replace the defective machine and parts upon return to AAC.
- AAC reserves the right to make the final decision on all warranty coverage questions.
- AAC warranty periods as stated are for eight hundred (800) hours or one hundred (100) days whichever comes first.
- AAC guarantees satisfactory operation of the machines on the basis of generally accepted industry standards, contingent upon proper application, installation and maintenance.
- AAC Limited Warranty may not be changed or modified and is not subject to any other warranty expressed or implied by any other agent, dealer, or distributor unless approved in writing by AAC in advance of any claim being filed.

What Is Covered

- Electrical components that are not included within the Serial Bus System that fail due to defects in material or workmanship, which are manufactured by AAC are covered for a period of eight hundred (800) hours.
- Mechanical parts or components that fail due to defects in material or workmanship, which are manufactured by AAC.
- Purchased items (sewing heads, motors, etc.) will be covered by the manufacturers (OEM) warranty.
- AAC will assist in the procurement and handling of the manufacturers (OEM) claim.

What Is Not Covered

- Parts that fail due to improper usage, lack of proper maintenance, lubrication and/or modification.
- Damages caused by; improper freight handling, accidents, fire and issues resulting from unauthorized service and/or personnel, improper electrical, plumbing connections.
- Normal wear of machine and parts such as Conveyor belts, "O" rings, gauge parts, cutters, needles, etc.
- Machine adjustments related to sewing applications and/or general machine operation.
- Charges for field service.
- Loss of time, potential revenue, and/or profits.
- Personal injury and/or property damage resulting from the operation of this equipment.

Declaración de Garantía

Productos Manufacturados

Atlanta Attachment Company garantiza que los productos de fabricación son libres de defectos de material y de mano de obra durante un período de ochocientos (800) horas de operación o cien (100) días, cual llegue primero. Atlanta Attachment Company garantiza que todos los componentes del Serial Bus son libres de defectos de material y de mano de obra durante un periodo de treinta y seis (36) meses.

Términos y Condiciones:

- La Garantía Limitada de AAC entra en efecto el día de transporte.
- Reclamos de la Garantía de AAC pueden ser realizados por teléfono, carta, fax o correo electrónico. Todo reclamo verbal tiene que ser confirmado vía escrito.
- AAC se reserva el derecho de exigir el retorno de cada pieza defectuosa con un formulario de reclamo de garantía.
- AAC va, según su criterio, a reparar o reemplazar las máquinas o piezas defectuosas devueltas a AAC.
- AAC se reserva el derecho para tomar la decisión final sobre toda cuestión de garantía.
- Las garantías de AAC tiene una validez de ochocientas (800) horas o cien (100) días, cual llega primero.
- AAC garantiza la operación satisfactoria de sus máquinas en base de las normas aceptadas de la industria siempre y cuando se instale use y mantenga de forma apropiada.
- La garantía de AAC no puede ser cambiada o modificada y no está sujeto a cualquier otra garantía implicada por otro agente o distribuida al menos que sea autorizado por AAC antes de cualquier reclamo.

Lo Que Está Garantizado

- Componentes eléctricos que no están incluidos dentro del sistema Serial Bus que fallen por defectos de materiales o de fabricación que hayan sido manufacturados por AAC, son garantizados por un período de ochocientas (800) horas.
- Componentes mecánicos que fallen por defectos de materiales o de fabricación que hayan sido manufacturados por AAC, son garantizados por un período de ochocientas (800) horas.
- Componentes comprados (Motores, Cabezales) son protegidos debajo de la garantía del fabricante.
- AAC asistirá con el manejo de todo reclamo de garantía bajo la garantía del fabricante.

Lo Que No Está Garantizado

- Falla de repuestos a raíz de uso incorrecto, falta de mantenimiento, lubricación o modificación.
- Daños ocurridos a raíz de mal transporte, accidentes, incendios o cualquier daño como resultado de servicio por personas no autorizados o instalaciones incorrectas de conexiones eléctricas o neumáticas.
- Desgaste normal de piezas como correas, anillos de goma, cuchillas, agujas, etc.
- Ajustes de la máquina en relación a las aplicaciones de costura y/o la operación en general de la máquina.
- Gastos de Reparaciones fuera de las instalaciones de AAC
- Pérdida de tiempo, ingresos potenciales, y/o ganancias.

Daños personales y/o daños a la propiedad como resultado de la operación de este equipo

Atlanta Attachment Company
362 Industrial Park Drive
Lawrenceville, GA 30046
770-963-7369
www.atlatt.com

Printed in the USA