Model **1393EBSA**

Revision 1.2 Updated Feb 5, 2013

Technical Manual & Parts Lists

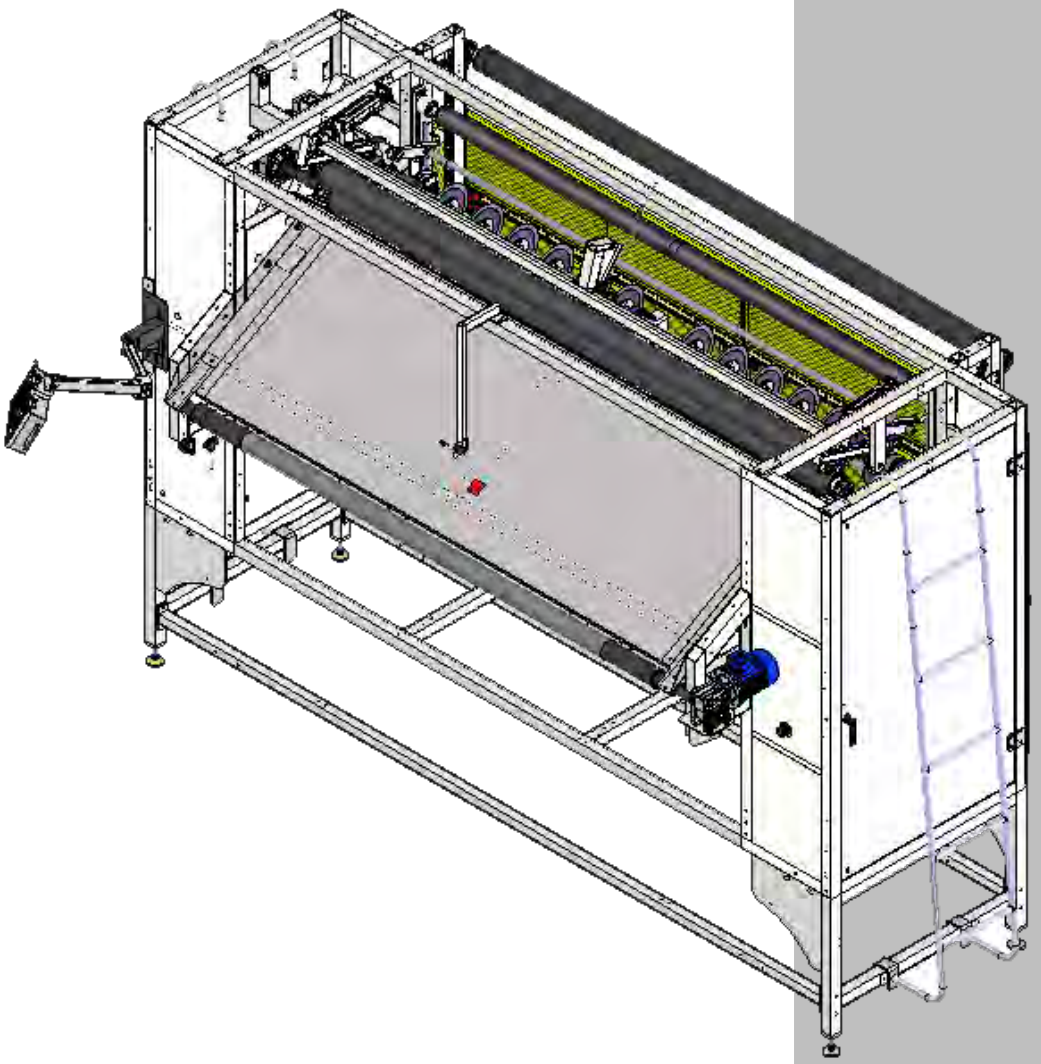

Atlanta Attachment Company

362 Industrial Park Drive

Lawrenceville, GA 30046

770-963-7369 • www.atlatt.com

ATLANTA ATTACHMENT COMPANY, INC.

Confidential and Proprietary Information

The materials contained herein are confidential and proprietary information of Atlanta Attachment Company. In addition to any confidentiality and non-disclosure obligations that currently exist between you and Atlanta Attachment Company, your use of these materials serves as an acknowledgment of the confidential and proprietary nature of these materials and your duty not to make any unauthorized use or disclosure of these materials.

All materials contained herein are additionally protected by United States Copyright law and may not be used, disclosed, reproduced, distributed, published or sold without the express written consent of Atlanta Attachment Company, which consent may be withheld in Atlanta Attachment Company's sole discretion. You may not alter or remove any copyright, trademark or other notice from copies of these materials.

Patents & Patents Pending

The sale of this product does not sell or otherwise transfer any license or other rights under any U.S. Patent or other corresponding foreign patent.

This equipment is manufactured under one or more of the following patents:
4,280,421 ● 4,432,294 ● 4,466,367 ● 4,644,883 ● 5,134,947 ● 5,159,889 ● 5,203,270 ● 5,373,798 ● 5,437,238 ● 5,522,332 ● 5,524,563 ● 5,562,060 ● 5,634,418 ● 5,647,293 ●5,657,711 ● 5,743,202 ● 5,865,135 ● 5,899,159 ● 5,915,319 ● 5,918,560 ● 5,924,376 ●5,979,345 ● 6,035,794 ● 6,055,921 ● 6,202,579 ● 6,279,869 ● 6,295,481 ● 6,494,225 ●6,523,488 ● 6,574,815 ● 6,802,271 ● 6,834,603 ● 6,968,794 ● 6,994,043 ● 7,543,364 ●7,574,788 ● 7,647,876 ● 7,735,439

Foreign Patents: 9-520,472 ● 0,537,323 ● 92,905,522.6 ● 96,936,922.2 ● 2,076,379 ● 2,084,055
Other U.S. and Foreign Patents Pending.

IMPORTANT

It is important to read and understand the information contained within this manual before attempting to operate the machine. Atlanta Attachment Co., Inc. shall not be held liable for damage resulting from misuse of the information presented within, and reserves the right to change the information contained within, without prior notification.

Contents

Important Safety Instruction 1
Liability 2
Safety Equipment on the Machines 3
Protective Eyewear 4
Important Notices 5
Maintenance 7
Repair 8
A Word to the End User 9
Safety Precautions 9
1.- INSTALLATION MANUAL 10
1.1.- Parts and Components 10
1.2.- Technical Data 11
1.3.- Installation & Set Up 12
2.- OPERATION MANUAL 13
2.1 Individual components 13
2.2.- Touch Screen 14
a.- Border Mode 15
b.- Manual Mode 17
c.- Sharpen Blades 18
d.- Maintenance Menu 20
2.3.- Operating 22
c.- Border Cutting 23
2.4.- Maintenance 24
a.- Daily 24
b.- Weekly 24
c.- Monthly 24
3.- SERVICE MANUAL 25
1.- Pneumatic 25
Programming ACTech SCL/SCM Drive (1393EBSA Only) 26
Infeed Drive Motor Parameters Menu (INV1) 27
1393EBSA Spare Parts Kit 29
Assembly Drawings & Parts Lists 30
11393EBSA Border Slitter/No Winder 33
1389747 Touchscreen Cable Assembly 34
1388549 Right Side Door Assembly 35
1388550 Left Side Door Assembly 36

1388559 Door Stop/Bumper Assembly 37
1388415 Swivel Arm Assembly 39
1388617 Electrical Back Panel Assembly 41
1388627 Sub Frame Assembly 43
1388276 Slitter Motor Drive Assembly 44
1388317 Top Roller Assembly 45
1388331 Infeed Roll Drive Assembly 46
1388333 Border lift Roll Assembly 47
1388343 Outfeed Drive Roll Assembly 48
1388444 Outfeed Motor Assembly 49
1388680 Pneumatic Assembly 51
1389860 Split Shaft Slitter Assembly 52
1393149 Slitter Assembly 53
1389078 X cut Material Sensor 54
1388578 Dancer Roller Assembly 55
1388572 Dancer Assembly 57
1493226 Edge Guide Assembly 58
1389896 Slitter Sharpener Assembly 59
1393-KIT06 Weighted Slitter Bar Assembly 60
1389884 Slitters Sharpener Assembly 61
1393160 Rear Guard 62
1393676 Encoder Assembly 63
1389794 Encoder Cable Assembly 64
1393EBSA-PD Pneumatic Diagram 66
1393EBSA-WD1 Wiring Diagram 67
1393EBSA-WD2 Wiring Diagram 68
1393EBSA-WD3 Wiring Diagram 69
1393EBSA-WD4 Wiring Diagram 70
1393EBSA-WD5 Wiring Diagram 71
1393EBSA-WD6 Wiring Diagram 72
1393EBSA-WD7 Wiring Diagram 73
1393EBSA-WD8 Wiring Diagram 1 of 12 74
1393EBSA-WD8 Wiring Diagram 2 of 12 75
1393EBSA-WD8 Wiring Diagram 3 of 12 76
1393EBSA-WD8 Wiring Diagram 4 of 12 77
1393EBSA-WD8 Wiring Diagram 5 of 12 78
1393EBSA-WD8 Wiring Diagram 6 of 12 79

1393EBSA-WD8 Wiring Diagram 7 of 12 80
1393EBSA-WD8 Wiring Diagram 8 of 12 81
1393EBSA-WD8 Wiring Diagram 9 of 12 82
1393EBSA-WD8 Wiring Diagram 10 of 12 83
1393EBSA-WD8 Wiring Diagram 11 of 12 84
1393EBSA-WD8 Wiring Diagram 12 of 12 85

Important Safety Instruction

This part of the Instruction Material is provided for the safe use of your equipment. It contains important information to help work safely with the unit and describes the dangers inherent in machinery. Some of these dangers are obvious, while others are less evident.

Mandatory Information

All persons operating and/or working on the 1393EBSA Border Slitter should read and understand all parts of the Safety Instructions. This applies, in particular, for persons who only operate and/or work on the unit occasionally (e.g. for maintenance and repair). Persons who have difficulty reading must receive particularly thorough instruction.

Scope of the Instruction Material

- The Instruction Material comprises:
- Safety information
- Operator Instructions
- Electrical and Pneumatic diagrams

And may also include;

- A list of recommended spare parts
- Instruction Manual(s) for components made by other manufacturers
- The layout and installation diagram containing information for installation

Intended Use

Our machines are designed and built in line with the state of the art and the accepted safety rules. However, all machines may endanger the life and limb of their users and/or third parties and be damaged or cause damage to other property, particularly if they are operated incorrectly or used for purposes other than those specified in the Instruction Manual.

Exclusion of Misuse

Non-conforming uses include, for example, using the equipment for something other than it was designed for, as well as operation without duly installed safety equipment. The risk rests exclusively with the end user.

Conforming use of the machine includes compliance with the technical data, information and regulations in all parts of the complete Instruction Material, as well as compliance with the maintenance regulations. All local safety and accident prevention regulations must also be observed.

Liability

The machine should only be operated when in perfect working order, with due regard for safety and the potential dangers, as well as in accordance with the Instruction Material. Faults and malfunctions capable of impairing safety should be remedied immediately. We cannot accept any liability for personal injury or property damage due to operator errors or non-compliance with the safety instructions contained in this booklet. The risk rests exclusively with the end user.

The Instruction Material should always be kept near the machine so that it is accessible to all concerned.

The local, general, statutory and other binding regulations on accident prevention and environmental protection must also be observed in addition to the Instruction Material. The operating staff must be instructed accordingly. This obligation also includes the handling of dangerous substances and provision/use of personal protective equipment.

The Instruction Material should be supplemented by instructions, including supervisory and notification duties with due regard for special operational features, such as the organization of work, work sequences, the personnel deployed, etc.

The personnel's awareness of the dangers and compliance with the safety regulations should be checked at irregular intervals.

Choice and Qualification of Personnel

Ensure that work on the machine is only carried out by reliable persons who have been appropriately trained for such work - either within the company, by our field staff or at our office - and who have not only been duly appointed and authorized, but are also fully familiar with the local regulations. Work on the machine should only be carried out by skilled personnel, under the management and supervision of a duly qualified engineer.

This not only applies when the machine is used for production, but also for special work associated with its operation (start-up and maintenance), especially when it concerns work on the hydraulic or electrical systems, as well as on the software/serial bus system.

Training

Everyone working on or with the machine should be duly trained and informed with regard to correct use of the safety equipment, the foreseeable dangers which may arise during operation of the machine and the safety precautions to be taken. In addition, the personnel should be instructed to check all safety mechanisms at regular intervals.

Responsibilities

Clearly define exactly who is responsible for operating, setting-up, servicing and repairing the machine. Define the responsibilities of the machine operator and authorize him to refuse any instructions by third parties if they run contrary to the machine's safety. This applies in particular for the operators of machines linked to other equipment. Persons receiving training of any kind may only work on or with the machine under the constant supervision of an experienced operator. Note the minimum age limits permitted by law.

A Word to the Operator

The greatest danger inherent in our machines:
is that of fingers, hands or loose clothing being drawn into a machine by live, coasting or rotating tools or assemblies or of being cut by sharp tools or burned by hot elements.

ALWAYS BE CONSCIOUS OF THESE DANGERS!

Safety Equipment on the Machines

All machines are delivered with safety equipment, which shall not be removed or bypassed during operation.

The correct functioning of safety equipment on machines and systems should be checked every day and before every new shift starts, after maintenance and repair work, when starting up for the first time and when restarting (e.g. after prolonged shutdowns).

If safety equipment has to be dismantled for setting-up, maintenance or repair work, such safety equipment shall be replaced and checked immediately upon completing the maintenance or repair work. All protective mechanisms shall be fitted and fully operational whenever the machine is at a standstill or if it has been shut down for a longer period of time.

Damage

If any changes capable of impairing safety are observed in the machine or its mode of operation, such as malfunctions, faults or changes in the machine or tools, appropriate steps must be taken immediately, the machine switched off and a proper lockout tagout procedure followed. The machine should be examined for obvious damage and defects at least once per shift. Damage found shall be immediately remedied by a duly authorized person before resuming operation of machine.

The machine should only be operated when in perfect working order and when all protective mechanisms and safety equipment, such as detachable protective mechanisms, emergency STOP systems, etc. are in place and operational.

Faults or Errors

The machine must be switched off and all moving or rotating parts allowed to come to a standstill and secured against accidental restart before starting to remedy any faults or errors.

Signs on the Machine

Safety and danger signs on the machine should be observed and checked at regular intervals to ensure that they are complete and undamaged. They should be clearly visible and legible at all times.
Clothing, Jewelry, Protective Equipment
Long loose hair, loose-fitting clothes, gloves and jewelry, including rings, should be avoided in order to avoid injuries due to being caught, drawn in and wound up inside the machine.

Protective Eyewear

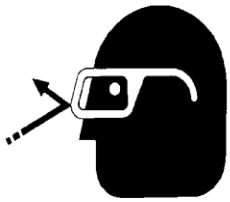

Protective eyewear that has been tested by the local authorities should be worn whenever there is a possibility of loose or flying objects or particles such as when cleaning the machine with compressed air.

Tools

Always count the number of tools in your possession before starting work on the machine. This will allow you to check that no tools have been left behind inside the machine. Never leave a tool in the machine while working.

Oils, Lubricants, Chemicals

Note the applicable safety regulations for the product used.

No Smoking, Fire, Explosion Hazard

Smoking and open flame (e.g. welding work) should be prohibited in the production area due to the risk of fire and explosions.

Workplace

A clear working area without any obstructions whatsoever is essential for safe operation of the machine. The floor should be level and clean, without any waste.

The workplace should be well lit, either by the general lighting or by local lights.

Emergency STOP

The emergency STOP buttons bring all machine movements to a standstill. Make sure you know exactly where they are located and how they work. Try them out. Always ensure easy access to the nearest emergency STOP button while working on the machine.

First Aid

1. Keep calm even when injured.
2. Clear the operator from the danger zone. The decision of what to do and whether to seek additional assistance rests entirely with you, particularly if someone has been trapped.
3. Give First Aid. Special courses are offered by such organizations as the employers' liability insurance association. Your colleagues should be able to rely on you and vice versa.
4. Call an ambulance. Do you know the telephone numbers for the ambulance service, police and fire service?

Important Notices

Reporting and Fighting Fires

Read the instructions posted in the factory with regard to reporting fires and the emergency exits. Make sure you know exactly where the fire extinguishers and sprinkler systems are located and how they are operated. Pass on the corresponding information to the firemen when they arrive. Ensure there are enough signs to avoid fire hazards.

The following fire extinguishers may be used:
- Dry powder extinguishers, ABC fire-extinguishing powder.
- Carbon dioxide fire extinguishers to DIN 14461 for electronic components. Great care must be exercised when using carbon dioxide fire extinguishers in confined, badly ventilated rooms (see DIN 14406 and 14270).

Isolate the machine from the power supply if a fire breaks out. Do not use water on burning electrical parts until it is absolutely certain that they have been completely disconnected from the power supply. Burning oils, lubricants, plastics and coatings on the machine can give off gases and vapors that may be harmful to your health.
A qualified person should be consulted to repair the damage after a fire.

Electrical Power Supply

Before undertaking any maintenance or repair work on the machine, switch off the electrical power to the machine at the main source and secure it with a padlock so that it cannot be switched on again without authorization.
In practice, this may mean that the technician, electrician and operator all attach their own padlock to the master switch simultaneously so that they can carry out their work safely. Locking extension plates should be available for multiple locks if required. The primary purpose for a lockout/tagout procedure is to protect workers from injury caused by unexpected energizing or start-up of equipment.

Energy sources (electrical/pneumatic/hydraulic, etc.) for the equipment shall be turned off or disconnected and the switches locked or labeled with a warning tag. It is the responsibility of the employer to establish control procedures. Follow lockout/tagout procedures before, setup and/or any service or maintenance work is performed, including lubrication, cleaning or clearance of jams.

Caution: The machine is still not completely de-energized even when the master switch is off.

- Electricity - The machine is always isolated from the electrical power supply whenever the master switch has been switched off. However, this does not apply for the power supply in the control cabinet, nor for equipment that does not draw its power via the master switch.

- Pneumatic / hydraulic energy - Almost all our machines carry compressed air. In addition to switching off the master switch, the air supply must also be disconnected and the machine checked to ensure it is depressurized before starting any work on the machine; otherwise the machine may execute uncontrolled movements.

- Kinetic energy - Note that some motors or spindles, for example, may continue to run or coast run on after being switched off.

- Potential energy - Individual assemblies may need to be secured if necessary for repair work.

Delivery of the Machine/Packaging

Note any markings on the packaging, such as weights, lifting points and special information. Avoid temperature fluctuations. Condensation may damage the machine.

Transport Damage

The packaging and machine must immediately be examined for signs of damage in transit. Such damage must be reported to the shipper/transporter within the applicable time limits. Contact Atlanta Attachment Company and/or your transport insurer immediately, if signs of damage are visible. Never operate a damaged machine.

Interim Storage

If the machine has to be stored temporarily, it must be oiled or greased and stored in a dry place where it is protected from the weather in order to avoid damage. A corrosion-inhibiting coating should be applied if the machine has to be stored for a longer period of time and additional precautions taken to avoid corrosion.

Transporting the Machine

Disconnect the machine from all external connections and secure any loose assemblies or parts. Never step under a suspended load. When transporting the machine or assemblies in a crate, ensure that the ropes or arms of a forklift truck are positioned as close to the edge of the crate as possible. The center of gravity is not necessarily in the middle of the crate. Note the accident prevention regulations, safety instructions and local regulations governing transport of the machine and its assemblies.

Only use suitable transport vehicles, hoisting gear and load suspension devices that are in perfect working order and of adequate carrying capacity. Transport should only be entrusted to duly qualified personnel.

Never allow the straps to rest against the machine enclosure and never push or pull sensitive parts of the machine. Ensure that the load is always properly secured. Before or immediately after loading the machine, secure it properly and affix corresponding warnings.
All transport guards and lifting devices must be removed before the machine is started up again. Any parts that are to be removed for transport must be carefully refitted and secured before the machine is started up again.

Workplace Environment

Our machines are designed for use in enclosed rooms: Permissible ambient temperature approx. 5 - 40 °C (40 - 104 °F). Malfunctions of the control systems and uncontrolled machine movements may occur at temperatures outside this range.
Protect against climatic influences, such as electrostatic charges, lightning strikes, hail, storm damage, high humidity, salinity of the air in coastal regions.

Protect against influences from the surroundings: no structure-borne vibrations, no grinding dust, or chemical vapors.
Protect against unauthorized access.
Ensure that the machine and accessories are set up in a stable position.
Ensure easy access for operation and maintenance (Instruction Manual and layout diagram); also verify that the floor is strong enough to carry the weight of the machine.

Local Regulations

Particular attention must be paid to local and statutory regulations, etc. when installing machines and the plant (e.g. with regard to the specified escape routes). Note the safety zones in relation to adjacent machines.

Maintenance

General Safety Instructions

The machine shall be switched off, come to a standstill and be secured so that it cannot be switched on again inadvertently before starting any maintenance work whatsoever. Use proper lockout/tagout procedures to secure the machine against inadvertent startup.
Remove any oil, grease, dirt and waste from the machine, particularly from the connections and screws, when starting the maintenance and/or repair work. Do not use any corrosive-cleaning agents. Use lint-free rags.
Retighten all screw connections that have to be loosened for the maintenance and repair work. Any safety mechanisms that have to be dismantled for setting-up, maintenance or repair purposes must be refitted and checked immediately after completing the work.

Maintenance, Care, Adjustment

The activities and intervals specified in the Instruction Manual for carrying out adjustments, maintenance and inspections must be observed and parts replaced as specified.

All hydraulic and pneumatic lines should be examined for leaks, loose connections, rubbing and damage whenever the machine is serviced. Any defects found must be remedied immediately.

Waste, Disassembly, Disposal

Waste products should be cleared from the machine as soon as possible as not to create a fire hazard. Ensure that fuels and operating lubricants, as well as replacement parts are disposed of in a safe and ecologically acceptable manner. Note the local regulations on pollution control.

When scrapping (disassembling) the machine and its assemblies, ensure that these materials are disposed of safely. Either commission a specialist company familiar with the local regulations or note the local regulations when disposing of these materials yourself. Materials should be sorted properly.

Repair

Replacement Parts

We cannot accept any liability whatsoever for damage due to the use of parts made by other manufacturers or due to unqualified repair or modification of the machine.

Repair, Electrical

The power supply must be switched off (master switch off) and secured so that it cannot be switched on again inadvertently before starting any work on live parts.

Those parts of the machine and plant on which inspection, maintenance or repair work is to be carried out must be isolated from the power supply, if specified. The isolated parts must first be checked to determine that they are truly de-energized before being grounded and short-circuited. Adjacent live parts must also be isolated.

The protective measures implemented (e.g. grounding resistance) must be tested before restarting the machine after all assembly or repair work on electric parts.

Signal generators (limit switches) and other electrical parts on the safety mechanisms must not be removed or bypassed. Only use original fuses or circuit overloads with the specified current rating. The machine must be switched off immediately if a fault develops in the electrical power supply.

The electrical equipment of our machines must be checked at regular intervals and any defects found must be remedied immediately.

If it is necessary to carry out work on live parts, a second person should be on hand to operate the emergency OFF switch or master switch with voltage release in the event of an emergency. The working area should be cordoned off and marked by a warning sign. Only use electrically insulated tools.

Ventilation/Hazardous Gases

It is the end users responsibility to ensure adequate ventilation is provided to exhaust any and all noxious or hazardous gases that may be present in the working environment.

Hydraulic and Pneumatic Systems

Work on hydraulic or pneumatic equipment shall only be carried out by persons with training, knowledge and experience of hydraulic systems. Pressure lines shall be depressurized before starting any repair work.

General Liability

Liability for machine damage and personal injury is extinguished completely if any unauthorized conversions or modifications are undertaken. The machine must not be modified, enlarged or converted in any way capable of affecting safety without the manufacturer's prior approval.

Starting Machine Movements

Read the Instruction Manual carefully to establish which keys and functions start machine movements.

A Word to the End User

The end user has sole responsibility to enforce the use of safety procedures and guards on the machine. Any other safety devices or procedures due to local regulations should be should be retrofitted in accordance to these regulations and/or the EC Directive on the safety of machines.

Operator's position must always be readily accessible. Escape routes must always be kept clear and safety areas should be identified.

Safety Precautions

Safety should be a constant concern for everyone. Always be careful when working with this equipment. While normal safety precautions were taken in the design and manufacture of this equipment, there are some potential safety hazards.
Everyone involved with the operation and maintenance of this equipment should read and follow the instructions in this manual.
Operate the equipment only as stated in this manual. Incorrect use could cause damage to the equipment or personal injury.
It is the owner's responsibility to make certain that the operator reads and understands this manual before operating this equipment. It is also the owner's responsibility to make certain that the operator is a qualified and physically able individual, properly trained in the operation of this equipment.
Specific safety warning decals are located on the equipment near the immediate areas of potential hazards. These decals should not be removed or obliterated. Replace them if they become non-readable.

- ALWAYS keep safety shields and covers in place, except for servicing.
- ALWAYS operate equipment in daylight or with adequate working lights.
- Follow daily and weekly checklists, making sure hoses are tightly secured and bolts are tightened.
- ALWAYS watch and avoid holes or deep depressions.
- ALWAYS wear adequate eye protection when servicing the hydraulic system and battery.
- NEVER operate a poorly maintained machine.
- NEVER allow persons to operate this machine without proper instruction.
- NEVER put hands or feet under any part of the machine while it is running.
- NEVER attempt to make any adjustments or repairs to the machine while running. Repairs or maintenance should be performed by trained personnel only.
- NEVER work under the machine unless it is safely supported with stands, blocks or a hoist and blocks.
- NEVER touch hot parts of machine.

1.- INSTALLATION MANUAL

It is important that the machine operator read this manual and is familiar with all the functions and safety concerns of the unit before operating.

1.1.- Parts and Components

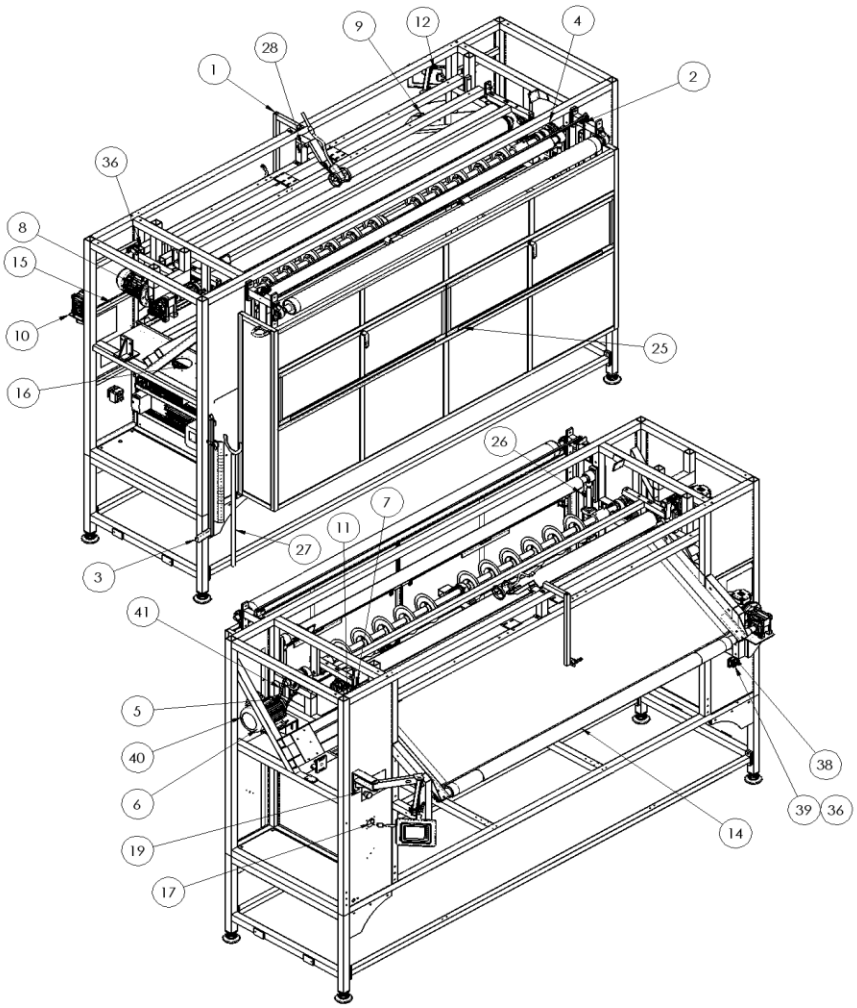

1.- Material Exit Sensor
2.- Dancer Bar Asm
3.- Nudge Tool
4,5.- Slitter Pulley
6.- Motor Mount
6.- Discharge Plate
8,9,11.- Discharge Support
10.-Gearmotor
12.-Swivel Arm Asm
13,14.- Center Support
15.- Plate
16.- Electrical Panel
17.- Solenoid Asm
18.- Knife Sharpen Reg.
19.- Button Assembly
20.- Slitter Shaft Asm
21.- End Mount Asm
22.- 30MM Shaft
23.- 30MM Tube Support
24.- Slitter Sharpen Asm
25.- Rear Guard
26.- Dancer Bar Sensor
27.- Grabber Tool
28.- Encoder Asm
36.- Machine Frame
37.- Power Disconnect
38.- Ground Terminal
39.- Disconnect Handle
40.- Slitter Motor
41.- Slitter V-Belt

1.2.- Technical Data

SPECIFICATIONS	
Max cutting thickness (inch)	1 1/2" (Compressed)
Min cutting thickness (inch)	1/4"
Max cutting width (inch)	102
Min cutting width (inch)	N/A
Max length (inch)	84
Min length (inch)	N/A
Voltage (v/ph/hz)	220V 3PH 50/60HZ
Current (amps)	20
Air pressure (psi)	80
Air consumption (cfm)	3
Shipping Weight (lbs)	5200
Shipping Dimensions (w/l/h, Inch)	144 x 65 x 78

PRODUCTION	
Output speed (Ft/Min.)	45

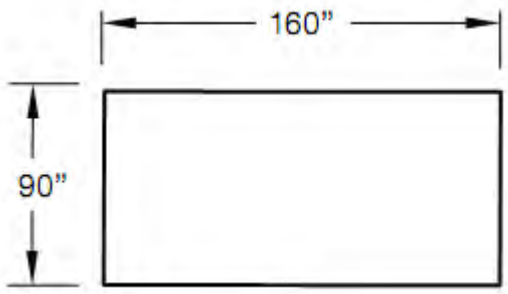

Foot Print

1.3.- Installation & Set Up

It is important that the machine operator read this manual and is familiar with all the functions and safety concerns of the unit before operating

1.- Unpack the machine frame and install it with help of crane and forklift.

2.- Remove any shipping straps from machine.

3.- Inspect the machine for any damage that may have occurred during shipping. If damage is found, report this immediately to your supervisor. Document the damage and provide details and photographs.

4.- Install the rollers onto the frame and be sure they can rotate freely.

5.- Install the back safety guard onto the frame.

6.- Adjoin the inner and outer board and install onto the frame, adjust them to in one plane.

7.- Adjust all rollers to be sure the midlines of them are parallel.

8.- Connect power source and compressed air.

9.- Provide a 220VAC, single phase, 20 Amp

10.- Provide 3/8" air supply line (80 PSI).

2.- OPERATION MANUAL

It is important that the machine operator read this manual and is familiar with all the functions and safety concerns of the unit before operating

2.1 Individual components

a.- Main Power

It is located below the touch screen panel. Is the main power switch ¼ turn to the right will supply power to the machine. This switch has provision to lockout the power when performing maintenance.

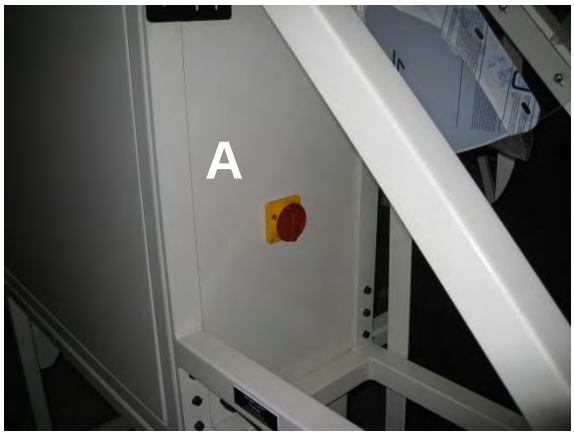

b.- Emergency Stop

There are red push buttons located in 4 places around the machine. After pushing it the machine will be disconnected from the energy source. You will need to turn the knob 1/8 revolution before reactivating the power

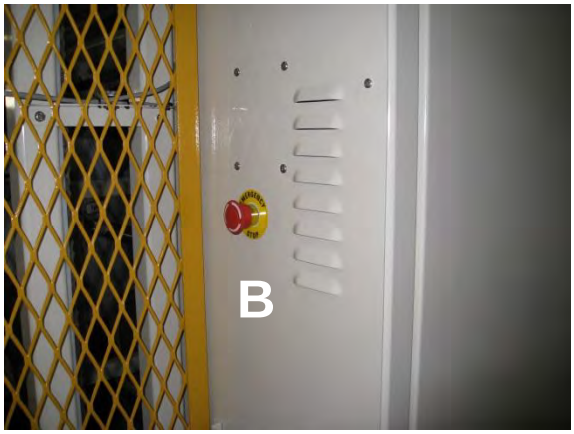

c.- Touch Screen / Control

1.- Emergency Stop - This button serves the same function as the other 3 red "E-Stop" push buttons located on each of the four corners of the machine.

2.- Power Off – Push off button for turning off power to the control panel and the machine.

3.- Power On – Activates main power to the control panel and machine (not control power)

2.2.- Touch Screen

Main Menu
It is displayed at the star up of the machine. Press any of the buttons on the screen and you will be transferred to the following sub-menus

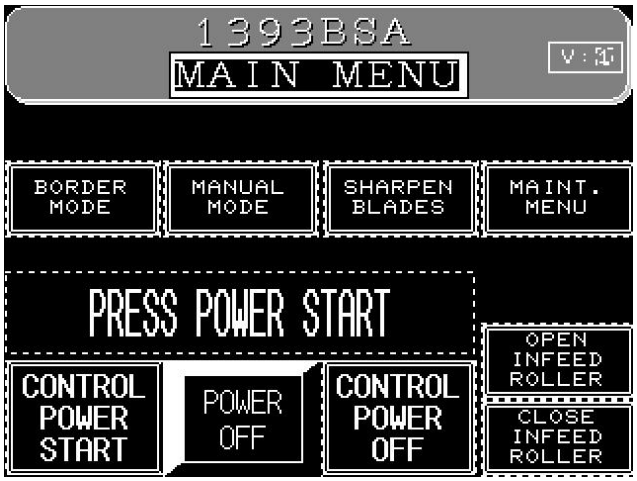

BORDER MODE
Press this button to access the auto border cutting mode & menu page

MANUAL MODE
Press this button to access the manual border cutting & menu page

SHARPEN BLADES
Press this button to access the slitter blade sharpening mode & menu page

TIMER SETTINGS MENU
Press this button to access the maintenance mode & menu page

CONTROL POWER START
Press this button to energize the control power to the machine

POWER OFF / POWER ON
This is an indicator to show when the control power is energized (Not a Button)

PRESS POWER START
This indicator message will be displayed only when control power is de-energized

CONTROL POWER OFF
Press this button to de-energize all the control power to the machine.
(PLEASE NOTE: THIS IS NOT THE SAME AS THE MAIN POWER)

OPEN IN FEED ROLLER
Press this button to open the main top infeed roller. Mainly used when loading material into the machine. (MAKE SURE THE DANCER BAR IS AT THE BOTTOM POSITION SO MATERIAL IS NOT PULLED OUT OF THE MACHINE WHEN THIS ROLLER IS OPENED.)

CLOSE INFEED ROLLER
Press this button to close the main top infeed roller.
(PLEASE NOTE: USE CAUTION WHEN CLOSING THIS ROLLER)

a.- Border Mode

Starting at Main Menu

- Select **BORDER MODE** from the Main Menu screen
- After pressing **BORDER MODE** from the main menu, you will arrive at the border cutting menu.

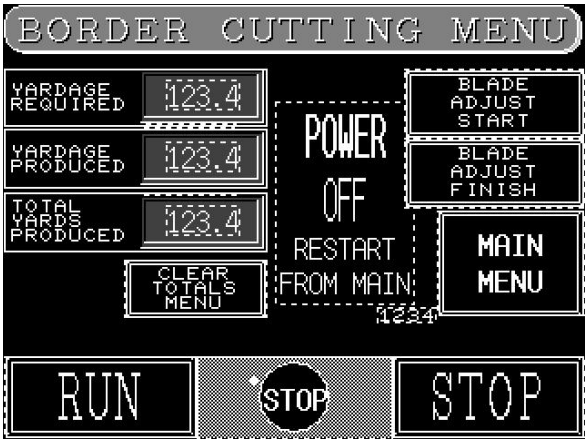

The Border Cutting Menu consists of three input boxes on the left hand side of the screen. These boxes are used to enter and display production data.

- **YARDAGE REQUIRED**
  The quantity of material needed to cut is displayed (displayed in yards) Data can be entered by touching this box. (Max Setting: 999.9 yards) Pressing the number box you will get a keyboard were you can change the numbers of yards to be produced. It is important to note that the machine will automatically stop at the desired length of border. To deactivate the measuring function set the quantity to zero.

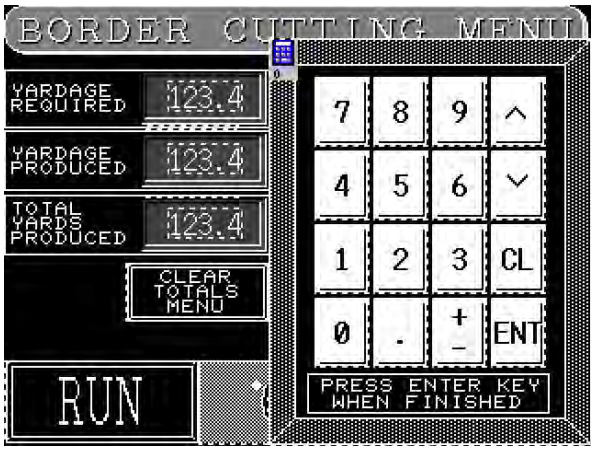

- **YARDAGE PRODUCED**
  The quantity of material already produced during the current order.
  Data can be entered or corrected by touching this data field box.

- **TOTAL YARDS PRODUCED**
  The TOTAL quantity of material produced. (Accumulated Quantity)

- **CLEAR TOTALS MENU**
  Displays a sub-menu that allows the resetting of production data.

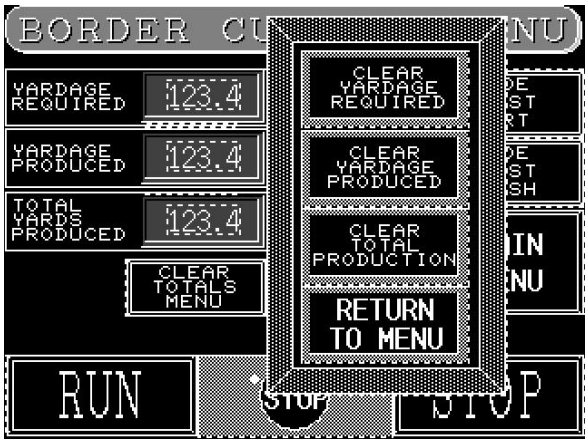

PLEASE NOTE: After selecting a number field a number pad will come up. Enter the desired number and select [ENT] button when finished. The keyboard will then disappear and return to the border cutting menu. The entered data will then be displayed in the box.

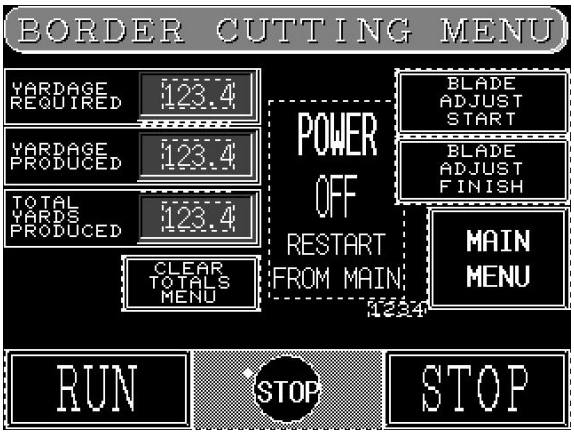

- **BLADE ADJUST START**
  When you press this button the slitters will disable and the material will feed forward until the dancer bar reaches the upper sensor. At this position the operator will have access via the front access doors to reposition the slitter blades as desired. Note: When the access doors are opened the power will automatically shut off to the motors to prevent any possibility of the power being inadvertently turned on to the slitters while the operator is making adjustments.

- **BLADE ADJUST FINISH**
  When the operator is finished adjusting the blades he/she will have to reset the power on button in the Main Menu to re-energize the panel. Once the power is on, press Border Mode. In the Border Mode select Blade Adjust Finish and the material will reverse feed until the dancer bar returns to the middle position. Note: if it is necessary to feed more material through to get back to where the slitters were reset this will have to be done in the Manual mode.

- **MAIN MENU**
  Return to Main Menu screen

- **PRESS POWER START**
  This indicator message will be displayed only when control power is de-energized

- **RUN**
  Press this button to start border cutting in the automatic mode. The machine will start cutting border and winding the material and will not stop until the YARDAGE REQUIRED quantity is reached or the [STOP] button is pressed.

- **STOP**
  Press this button to stop the automatic border cutting mode. The machine will stop cutting and the winder will stop.

b.- Manual Mode

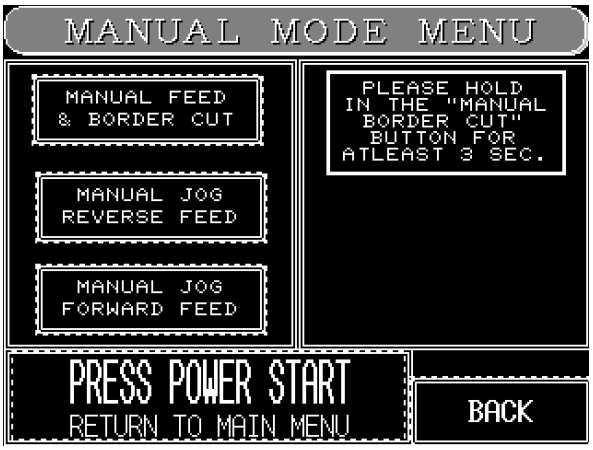

Starting at Main Menu

- Select **MANUAL MODE**
  from the Main Menu screen
  After pressing **MANUAL MODE** from the main menu, you will arrive at the manual mode menu

The Manual Mode Menu consists of four buttons that allow the user to cut border manually or to jog the feed roller and winder as needed.

- **MANUAL FEED & BOARDER CUT**
  Press this button to manually feed and cut border at normal feed rate. For safety issues, please hold button for more than 3 seconds to start manual border slitting. The feed rate is the same as if operation in auto border cut mode.
  (PLEASE NOTE: USE EXTREME CAUTION, SLITTER BLADES WILL OPERATE IN THIS MODE.)

- **MANUAL JOG REVERSE FEED**
  Press this button to manually jog the feed roller in the reverse direction. The feed rate will be slower when using the JOG buttons. The slitter blades will not turn on when using this button.

- **MANUAL JOG FORWARD FEED**
  Press this button to manually jog the feed roller in the forward direction. The feed rate will be slower when using the JOG buttons. The slitter blades will not turn on when using this button.

- **PRESS POWER START**
  This indicator message will be displayed only when control power is de-energized

- **BACK**
  Press this button to return to the main menu screen.

c.- Sharpen Blades

Starting at Main Menu

- Select **SHARPEN BLADES** from the Main Menu screen
  After pressing **SHARPEN BLADES** from the main menu, you will arrive at the sharpen blades menu.

The Sharpen Blades Menu consists of three sub-menus that allow the user to access the rear safety doors and sharpen the slitter blades.

- **SHARPEN SLITTER BLADES**
  Press this button to access the slitter blade sharpener warning and acknowledgement page.

- **PRESS POWER START**
  This indicator message will be displayed only when control power is de-energized

- **BACK**
  Press this button to return to the main menu screen

- **SHARPENER ACKNOWLEDGEMENT**
  This page will be display before entering the slitter blade sharpening page. Carefully read the warning and acknowledgement instructions. Proceed by pressing the [RETURN] or [CONTINUE] buttons. [RETURN] will bring you back to the main sharpen blades menu. [CONTINUE] will take you to the sub-menu that will disable the rear safety guards and allow blade sharpening.

- **SHARPEN SLITTER BLADES**
  Press this button to start the slitter blade sharpening cycle. The rear guards can be opened when this menu is displayed.
  (PLEASE NOTE: USE EXTREME CAUTION, SLITTER BLADES WILL OPERATE IN THIS MODE.)

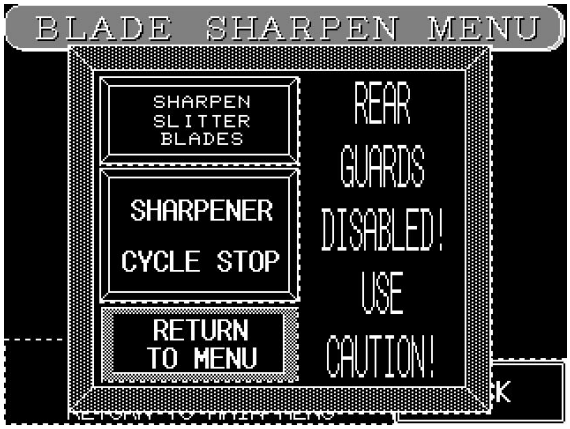

- **SHARPENER CYCLE STOP**
  Press this to stop the sharpening cycle.

- **RETURN TO MENU**
  Press this button to return to the sharpen blades menu screen.
  DO NOT FORGET TO CLOSE THE REAR GUARDS BEFORE PRESSING THIS BUTTON; OTHERWISE, THE CONTROL POWER WILL BE TURNED OFF.

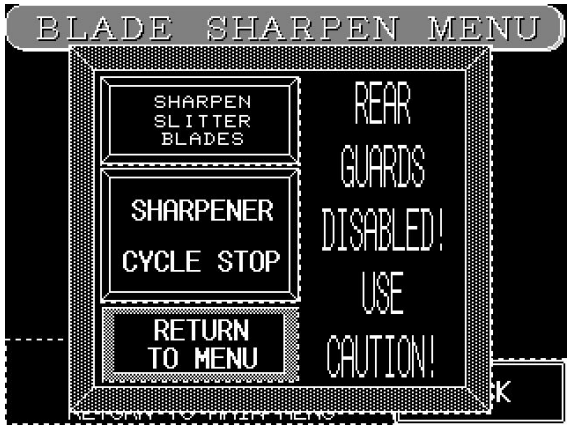

d.- Maintenance Menu

Starting at Main Menu

- Select **MAINT. MENU** from the Main Menu screen.
  After pressing **MAINT. MENU** from the main menu, you will arrive at the maintenance menu screen.

The Maintenance Menu consists of 8 buttons that allow the user to manually operate air cylinders and motors. The remaining buttons allow the user to access the PLC I/O monitoring page or return to the main menu screen.

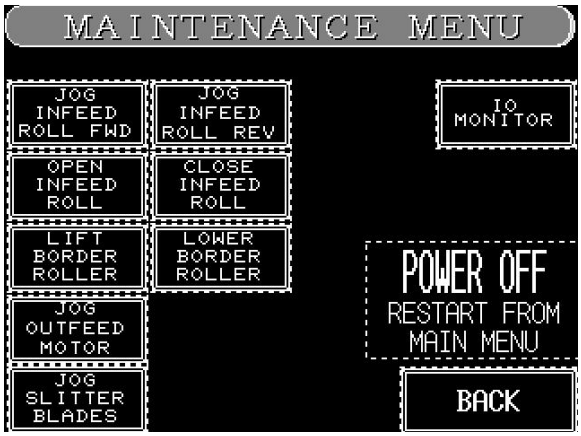

- **JOG INFEED ROLL FWD**
  Press this button to manually jog infeed roll forward

- **JOG INFEED ROLL REV**
  Press this button to manually jog infeed roll reverse

- **OPEN INFEED ROLL**
  Press this button to open the infeed roller

- **CLOSE INFEED ROLL**
  Press this button to close the infeed roller

- **LIFT BORDER ROLLER**
  Press this button to lift the border roll cylinders

- **LOWER BORDER ROLLER**
  Press this button to lower the border roll cylinders

- **JOG OUTFEED MOTOR**
  Press this button to manually jog the material outfeed motor.

- **JOG SLITTER BLADES**
  Press this button to manually jog the slitter blades motor.
  (PLEASE NOTE: USE EXTREME CAUTION, SLITTER BLADES WILL OPERATE IN THIS MODE.)

- **PRESS POWER START**
  This indicator message will be displayed only when control power is de-energized

- **BACK**
  Press this button to return to the main menu screen. When leaving the maintenance menu, a warning screen will appear. Two options are given to exit or return to the maintenance menu.

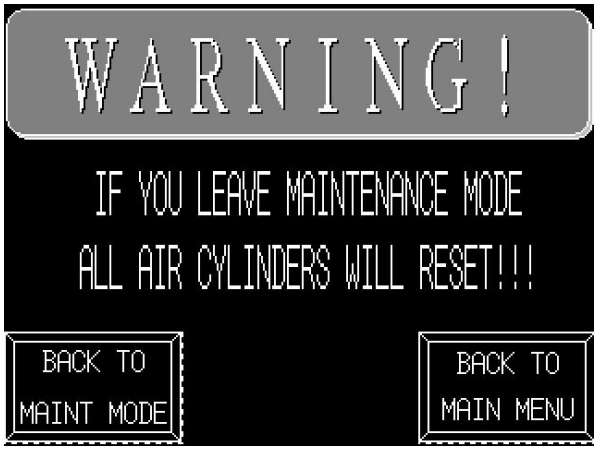

BACK TO MAINT. MODE
will not disturb the state of any cylinder or motor changed during maintenance mode.

BACK TO MAIN MENU
will return all cylinders and motors to their HOME state or power off condition and return to the main menu screen.

- **I/O MONITOR**
  Press this button access the PLC I/O monitor screens. The first screen displayed after pressing the [I/O MONITOR] button will be the PLC inputs monitor. PLC inputs X0~X2F will be displayed. This is useful when troubleshooting machine issues.

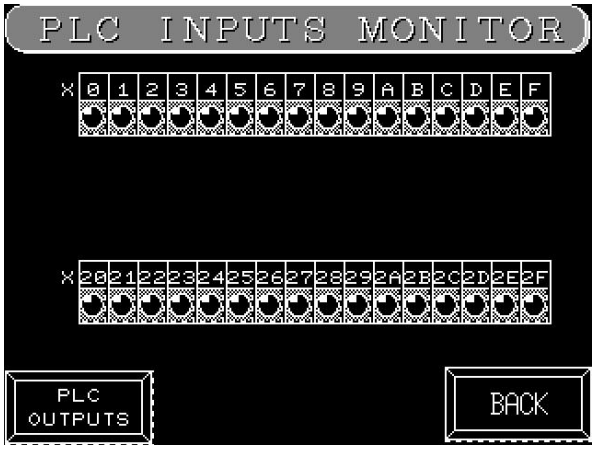

PLC OUTPUTS
button will access the outputs page. PLC outputs Y0~Y2F will be displayed. Reference the electrical drawings for further reference of the PLC I/O signal numbers.

BACK
button will return to the maintenance menu.

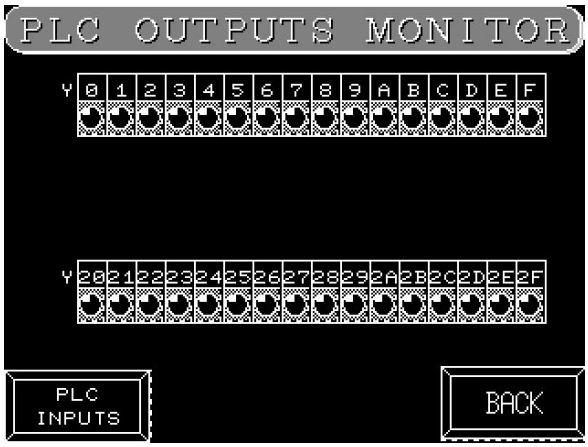

2.3.- Operating

It is important that the machine operator read this manual and is familiar with all the functions and safety concerns of the unit before operating

A.- Turning ON

a.- Make Sure that the Main Power switch is on the "ON" position
b.- Press the "ON" button on the Control Panel
Machine will show Atlanta Attachment logo and will power ON

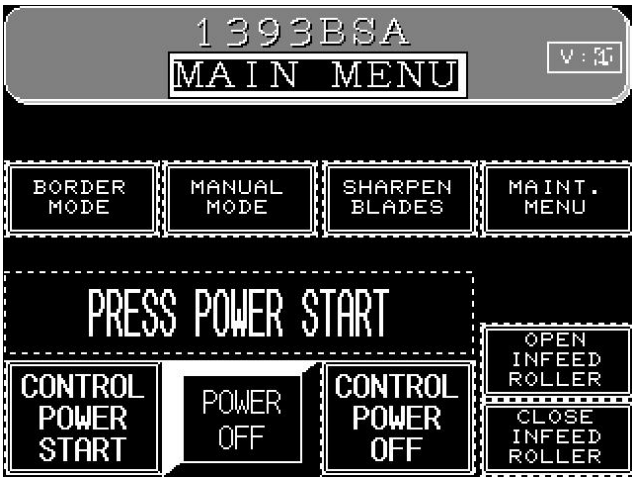

B.- Load the material

a.- With the machine ON, Press **LOAD MATERIAL IN FEED** on the Main Menu
b.- Press **OPEN IN FEED ROLLER**,
c.- Open the safety doors You will be able to load material thought the machine. Follow the picture for a correct loading of the material.

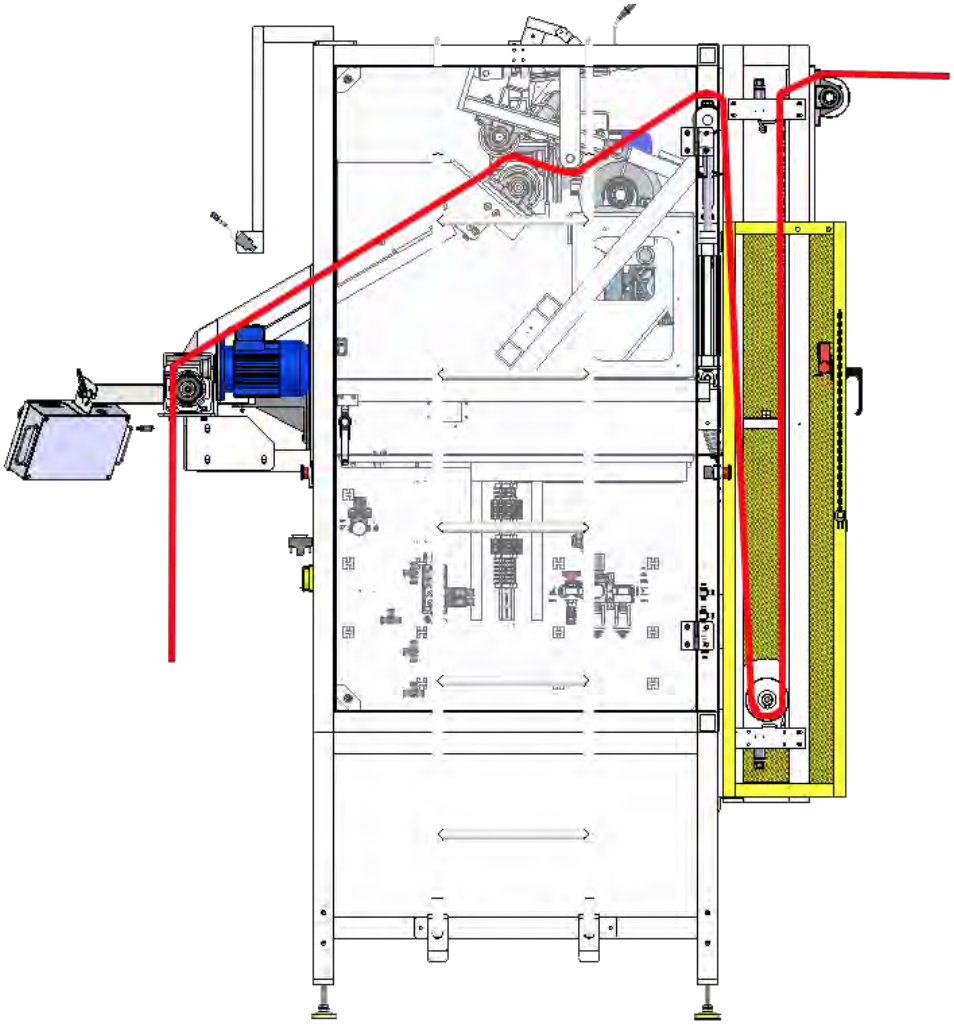

c.- Border Cutting

a.- Carefully adjust manually the cutting blades to the right border width.
b.- Make sure machine is loaded with material and all doors are close
c.-.- Press [CONTROL POWER START] from the Main Menu Screen
d.- Press [BORDER MODE] on the same screen.
e.- Load the production required (Border quantity, length, etc.)
f.- Press [RUN].

"ATTENTION "Never leaves the machine unattended"

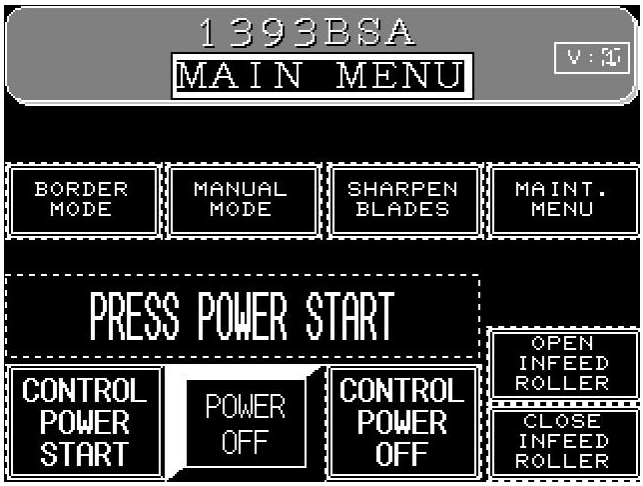

2.4.- Maintenance

a.- Daily

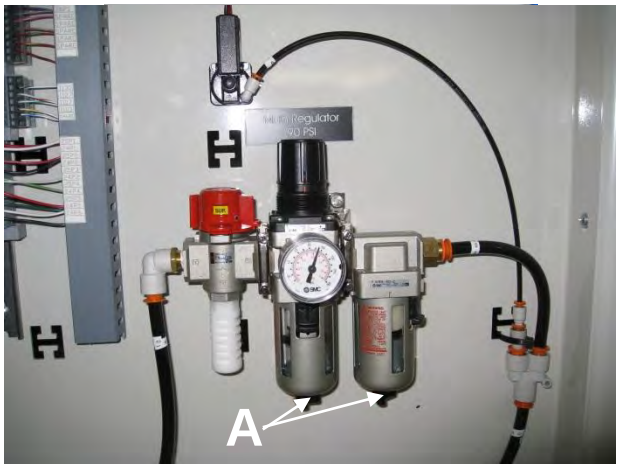

1.- Drain water from water trap in air pressure regulator.
2.- Clean any lint or debris from around bearings, blades and motors.
3.- Clean work area and check for any signs of abnormality or wear.

b.- Weekly

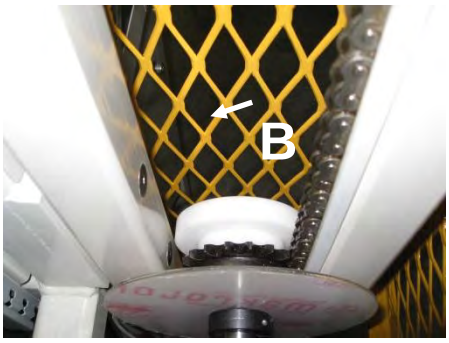

1.- Clean dancer bar guide chains and sprocket.
2.- Clean lint and debris from inside machine around XCut linear rail bearings and belt.
3.- Check for any areas of wear or potential problems.

c.- Monthly

1.- Thoroughly clean machine inside and out.
2.- Check condition of all drive belts.
3.- Check security of all blades.
4.- Check setting of blade sharpening stones.
5.- Clean threads from around all shafts and rollers.
6.- Clean cabinet cooling fan and filter.
7.- Check condition of dancer bar guide chain and sprocket alignment on both sides..
8.- Check and grease pillow block bearings as needed. (Look for rust or fine metal particles)

3.- SERVICE MANUAL

It is important that the machine operator read this manual and is familiar with all the functions and safety concerns of the unit before operating.

1.- Pneumatic

a.- Main air regulator
Determine the pressure for the whole machine.
(Factory adjustment 90 psi)

b.- Blade Sharpeners.
Control the reassure of the blade sharpeners.
(Factory adjustment 30 psi)

c,- Infeed Roll regulator. Control de pressure of the top in feed roll.
(Factory adjustment 20 to 40 psi)

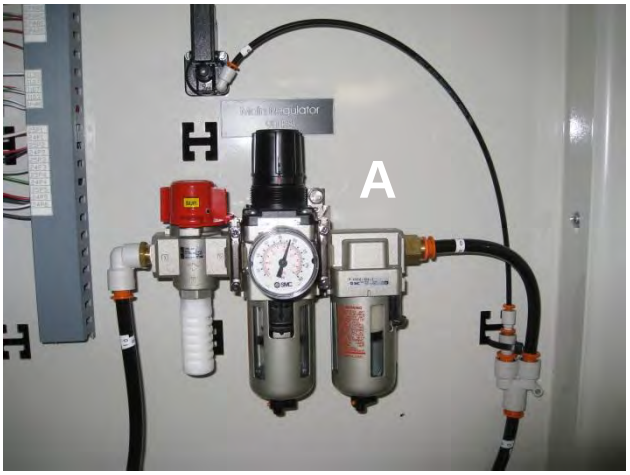

Programming ACTech SCL/SCM Drive (1393EBSA Only)

The drive is already pre-programmed** with settings specifically for the 1393EBSA Unit by Atlanta Attachment Co. These settings are listed in the chart on the following page. Password protection is currently disabled so that control of the parameters is immediately available to the user. After the controller settings have been "fine tuned", you can use parameter 44 to set a password value between 1-999 to "lock" the control setting for the motors.

The buttons and display on the front of the motor controller can be used to change any specific parameter. Pressing the mode button will take you to the last parameter viewed. Parameters are designated with a "P" as the first character on the display. The arrow up and arrow down buttons will scroll through to the desired parameter. Pressing "Mode" displays the current parameter setting (point "above" decimal point blinks). This setting can be changed by using the arrow up and arrow down buttons. When the desired setting is found press the mode button to store the new value. This will store the new value and exit the program mode. To change another parameter value, press the mode key again and repeat the procedure.

**In the event the controller has not been pre-programmed by AAC, the default password from the factory is 225.

Every SCL/SCM Series drive has an Electronic Programming Module (EPM) installed on the main control board. The EPM stores the user's parameter settings and special OEM default settings (if programmed). The EPM is removable, allowing it to be installed in another drive for quick set-up. For example, if a drive is being replaced with a new one, the EPM can be taken out of the first drive and installed in the new drive. Downtime is minimized because the new drive does not require programming - it is ready to run when the EPM is installed.

NOTE: The drive will not operate without the EPM installed. The drive will display "F1" if the EPM is missing or damaged.

WARNING!

Do not remove the EPM while power is applied to the drive. Damage to the EPM and/or drive may result.

See tables on following pages...

Infeed Drive Motor Parameters Menu (INV1)

AAC custom setting shown in last column.

NO.	PARAMETER NAME	RANGE OF ADJUSTMENT	FACTORY DEFAULT	AAC SETTING
01	LINE VOLTAGE	High (01), LOW (02)	HIGH (01)	02
02	CARRIER FREQUENCY	4kHz (01), 6kHz (02), 8 kHz (03), 10 kHZ (04)	6 kHZ (02)	04
03	START METHOD	NORMAL (01), START ON POWER UP (02), START WITH DC BRAKE (03), AUTO RESTART WITH DC BRAKE (04), FLYING RESTART 1 (05), FLYING RESTART 2 (06), FLYING RESTART 3 (07)	NORMAL (01)	---
04	STOP METHOD	COAST (01), COAST W/ DC BRAKE (02), RAMP (03), RAMP W/ DC BRAKE (04)	COAST (01)	04
05	STANDARD SPEED SOURCE	KEYPAD (01), PRESET #1 (02), 0-10VDC (03), 4-20mA (04)	KEYPAD (01)	02
06	RELAY OUTPUT	NONE (01), RUN (02), FAULT (03), INVERSE FAULT (04), FAULT LOCKOUT (05), AT SET SPEED (06), ABOVE PRESET #3 (07), CURRENT LIMIT (08), AUTO SPEED (09), REVERSE (10)	NONE (01)	06
10	TB-13A FUNCTION SELECT	NONE (01), 0-10 VDC (02), 4-20 mA (03), PRESET SPEED #1 (04), START FORWARD (05), RUN REVERSE (06), START REVERSE (07), EXTERNAL FAULT (08), INVERSE EXT FAULT (09), AUXILARY STOP (10), ACCEL/DECEL #2 (11)	NONE (01)	06
11	TB-13B FUNCTION SELECT	NONE (01), 0-10 VDC (02), 4-20 mA (03), PRESET SPEED #2 (04), DECREASE FREQ (05), START FORWARD (06), JOG FORWARD (07), JOG REVERSE (08), EXTERNAL FAULT (09), INVERSE EXT FAULT (10), AUXILARY STOP (11), ACCEL/DECEL #2 (12), REMOTE KEYPAD (13)	NONE (01)	04

12	TB-13E INPUT FUNCTIONS TB-13 OUTPUT FUNCTIONS OTHER FUNCTIONS	NONE (01), 0-10 VDC (02), 4-20 mA (03), PRESET SPEED #3 (04), INCREASE FREQ (05), START FORWARD (06), EXTERNAL FAULT (07), INVERSE EXT FAULT (08), AUX STOP (09), ACCEL/DECEL #2 (10), RUN (11), FAULT (12), INVERSE FAULT (13), FAULT LOCKOUT (14), AT SET SPEED (15), ABOVE PRESET #3 (16), CURRENT LIMIT (17), AUTO SPEED (18), REVERSE (19), DYNAMIC BRAKING (20), REMOTE KEYPAD (21)	NONE (01)	---
14	CONTROL	TERMINAL STRIP ONLY (01) REMOTE KEYPAD ONLY (02)	TERMINAL STRIP ONLY (01)	---
16	UNITS EDITING	TENTHS OF UNITS (01), WHOLE UNITS (02)	WHOLE UNITS (02)	---
17	ROTATION	FORWARD ONLY (01), FORWARD AND REVERSE (02)	FORWARD ONLY (01)	02
19	ACCELERATION TIME	0.1 - 3600.0 SEC	20.0 SEC	1.0
20	DECELERATION TIME	0.1 - 3600.0 SEC	20.0 SEC	0.3
21	DC BRAKE TIME	0.0 - 3600.0 SEC	0.0 SEC	0.5
22	DC BRAKE VOLTAGE	0.0 - 30.0%	0.0 %	1.0
23	MINIMUM FREQUENCY	0.0 - MAXIMUM FREQUENCY	0.0 Hz	---
24	MAXIMUM FREQUENCY	MINIMUM FREQUENCY - 240 Hz	SCL = 50.0 Hz SCM = 60.0 Hz	80
25	CURRENT LIMIT	30 - 180 %	180 %	150
26	MOTOR OVERLOAD	30 - 100 %	100 %	---
27	BASE FREQUENCY	25.0 - 500 Hz	SCL = 50.0 Hz SCM = 60.0 Hz	60
28	FIXED BOOST	0.0 - 30.0 %	1.0 %	20
29	ACCEL BOOST	0.0 - 20.0 %	0.0 %	---
30	SLIP COMPENSATION	0.0 - 5.0 %	0.00%	---
31	PRESET SPEED	0.0 - MAXIMUM FREQUENCY	0.0 Hz	60
32	PRESET SPEED	0.0 - MAXIMUM FREQUENCY	0.0 Hz	35

33-37			0.0	0.0
38	SKIP BANDWIDTH	0.0 - 10 Hz	0.0 Hz	---
39	SPEED SCALING	0.0 - 6500.0	0.0	---
42	ACCEL/DECEL #2	0.1 - 3600.0 SEC	20.0 SEC	---
44	PASSWORD	000 - 999	225	*000
45	SPD AT MIN SIGNAL	MINIMUM FREQUENCY - 999 Hz	0.0 Hz	---
46	SPD AT MAX SIGNAL	MINIMUM FREQUENCY - 999 Hz	SCL = 50.0Hz SCM = 60.0Hz	---
47	CLEAR HISTORY	MAINTAIN (01), CLEAR (02)	MAINTAIN (01)	---
48	PROGRAM SELECTION	USER SETTINGS (01), OEM SETTINGS (02), RESET OEM (03), RESET 60 (04), RESET 50 (05), TRANSLATE (06)	SCL = RESET 50 (05) SCM = RESET 60 (04)	---
50	FAULT HISTORY	(VIEW ONLY)	(N/A)	---
51	SOFTWARE CODE	(VIEW ONLY)	(N/A)	---
52	DC BUS VOLTAGE	(VIEW ONLY)	(N/A)	---
53	MOTOR VOLTAGE	(VIEW ONLY)	(N/A)	---
54	LOAD VOLTAGE	(VIEW ONLY)	(N/A)	---
55	0-10 VDC INPUT	(VIEW ONLY)	(N/A)	---
56	4-20mA INPUT	(VIEW ONLY)	(N/A)	---
57	TB STRIP STATUS	(VIEW ONLY)	(N/A)	---
58	KEYPAD STATUS	(VIEW ONLY)	(N/A)	---
* PASSWORD IS SET TO "000" WHICH DISABLES THE PASSWORD FUNCTION				

1393EBSA Spare Parts Kit

QTY	AAC PART#	DESC.
1	AAE4V21008	VALVE,1/4" PORTED,24VDC
2	BBGER205-25	BEARING,BALL,25MM B,CLAMP
2	CJ21100900	BLADE, SLITTER, 205MM OD
1	EEMC12B11	CONTACTOR,IEC,230VAC
1	EEMC32A22	CONTACTOR,IEC,230VAC
1	EENI5Q18AN6X	LIMIT SW SENSOR
1	EERM699V3011	RELAY,REPLACEMENT
1	EES1	CONTACT BLOCK,NO,500V,10A
1	EES2	CONTACT BLOCK,NC,500V,10A
1	FFEVN2000A	SWITCH,LIMIT,ROLLER ARM,
1	FFSM312LVQ	EYE FOR MATERIAL OUT
1	MM90S11B3	BORDER CUT MOTOR
4	Q-1720-30	SHARPENING STONES
1	ZX5031	BELT FOR SLITTER DRIVE

Assembly Drawings & Parts Lists

The materials contained herein are confidential and proprietary information of Atlanta Attachment Company. In addition to any confidentiality and non-disclosure obligations that currently exist between you and Atlanta Attachment Company, your use of these materials serves as an acknowledgment of the confidential and proprietary nature of these materials and your duty not to make any unauthorized use or disclosure of these materials.

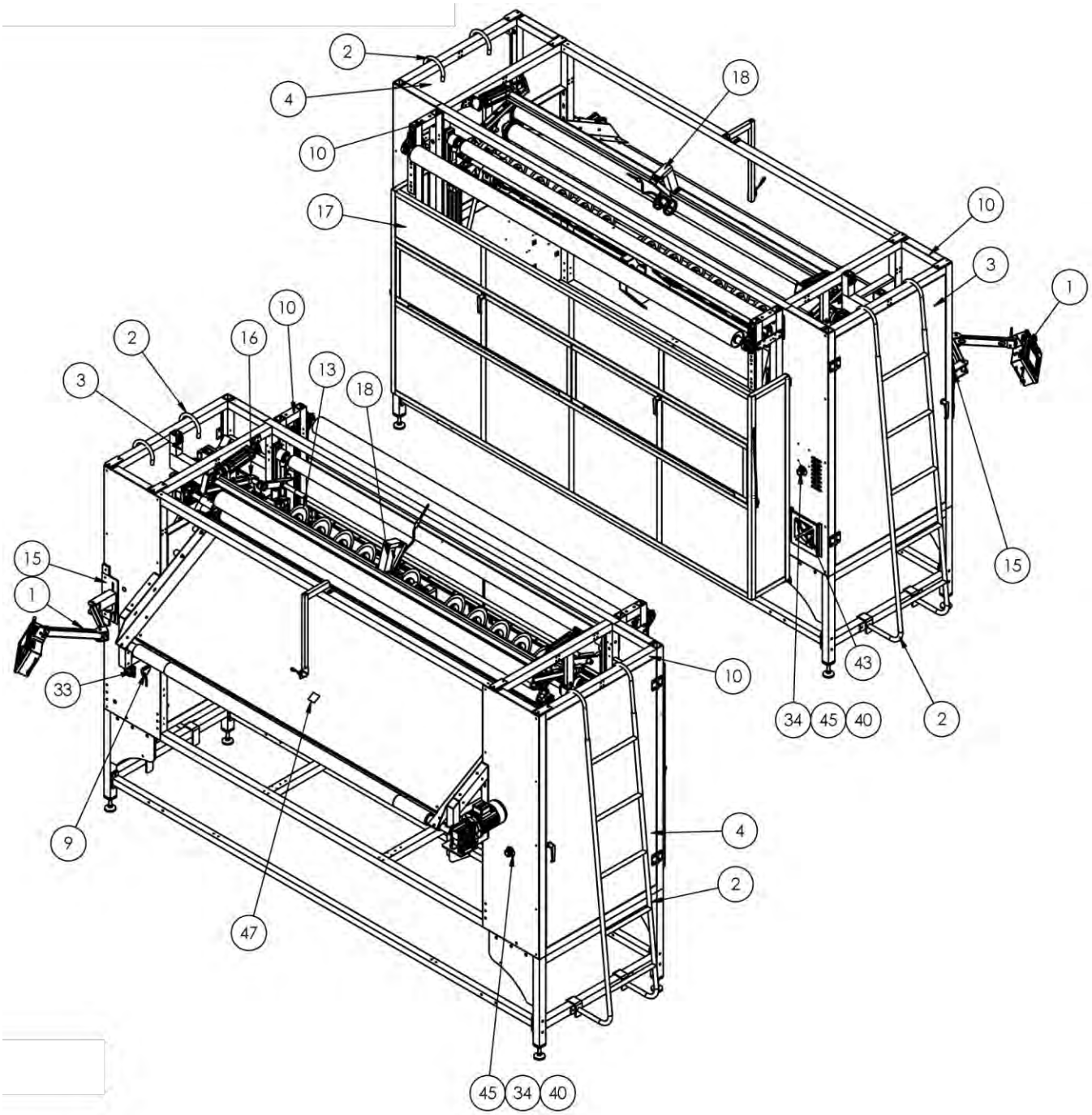
2
4
10
17
18
10
3
1
15
43
34
45
40
2
10
2
16
10
13
18
3
15
1
33
9
47
4
2
45
34
40

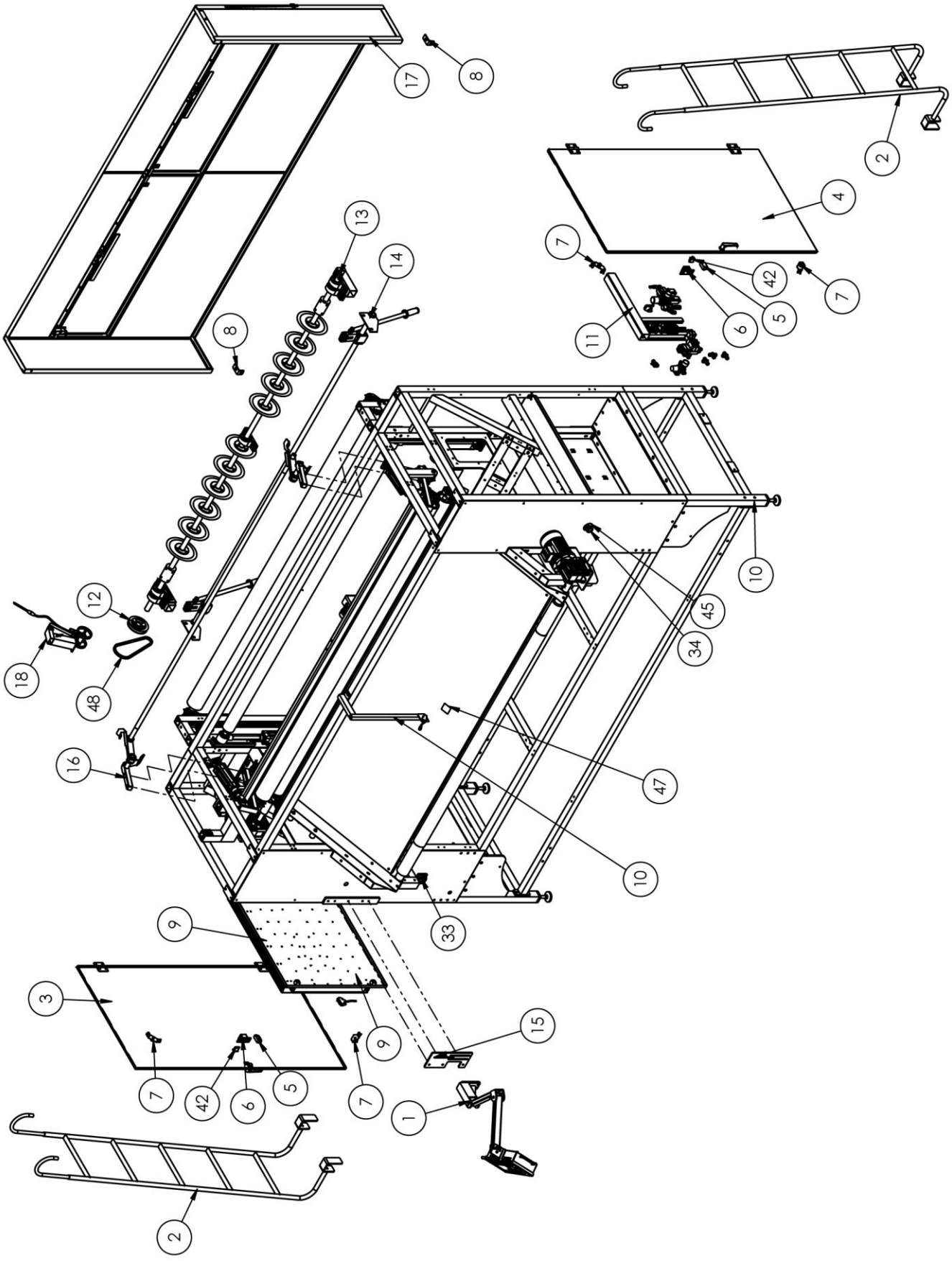
17
8
2
4
7
42
5
6
11
13
14
8
12
18
48
16
10
45
34
47
10
33
9
3
9
15
7
42
6
5
7
1
2

11393EBSA Border Slitter/No Winder

AAC Drawing Number 9003066 Rev 1

NO.	QTY	PART #	DESCRIPTION	
1	1	1388415	SWIVEL ARM ASSEMBLY	Page 39
2	2	1388510	LADDER, SHORT, 1393SPPC	
3	1	1388549	SIDE DOOR ASSEMBLY, RH	Page 35
4	1	1388550	SIDE DOOR ASSEMBLY, LH	Page 36
5	2	1388555	DOOR LATCH	
6	2	1388558	BOX,SAFETY SENSOR,DOOR	
7	4	1388559	DOOR STOP/BUMPER ASM	Page 37
8	2	1388592	BRACKET, REAR GUARD MNT	
9	1	1388617	BACK PANEL ELECTRICAL ASM	
10	1	1388627	1393EBSA SUB-FRAME ASM	Page 43
11	1	1388680	PNUEMATIC ASSEMBLY	Page 51
12	1	1389605	PULLEY, SLITTER MOTOR	
13	1	1389860	SLITTER ASBLY,SPLIT SHAFT	Page 52
14	1	1389896	SLITTER SHARPENER ASBLY	Page 59
15	1	1389902	PLATE, TOUCHSCREEN MOUNT	
16	1	1393-KIT06	WEIGHTED SLITTER BAR ASM	Page 60
17	1	1393160	REAR GUARD	Page 62
18	1	1393676	ENCODER ASSEMBLY	Page 63
20	*AR	1393EBSA-LAB1	BACK PLATE, LABEL	
20	*AR	1393EBSA-PD	DIAGRAM, PNEUMATIC	Page 66
21	*AR	1393EBSA-WD1	DIAGRAM, WIRING	Page 67
22	*AR	1393EBSA-WD2	DIAGRAM, WIRING	Page 68
23	*AR	1393EBSA-WD3	DIAGRAM, WIRING	Page 69
24	*AR	1393EBSA-WD4	DIAGRAM, WIRING	Page 70
25	*AR	1393EBSA-WD5	DIAGRAM, WIRING	Page 71
26	*AR	1393EBSA-WD6	DIAGRAM, WIRING	Page 72
27	*AR	1393EBSA-WD7	DIAGRAM, WIRING	Page 73
28	*AR	1393EBSA-WD8	DIAGRAM, WIRING	Page 74
29	*10FT	AATPWL1	WIRE LOOM, SLIT, .92" ID	
30	1	EE07100SP072	CORD, FAN, 72" STRAIGHT	
31	1	EE194EE631753	63AMP DISCON	
32	1	EE194EE63PE	GROUND TERMINAL	
33	1	EE194LHE6N175	DISCONNECT HANDLE,RED/YEL	
34	3	EE2AML4	OPERATOR, E-STOP,RED	
35	1	EE601612	GREY MULTI COND. CABLE	
36	* 32FT	EED78W308	DUCT, WIRE, 3/4 X 3/4	
37	* 32FT	EED78W332	DUCT, WIRE, COVER	
38	* 32FT	EEDC15X15	DUCT, WIRE, COVER	
39	* 32FT	EEDE15X15	DUCT, WIRE	
40	6	EES2	CONTACT BLOCK, NC	
41	* 50FT	FF822427	CABLE, SOOW,4X14AWG,600V	
42	2	FFE6930A	SWITCH,INTEROCK,DOOR,SPDT	
43	1	MM1976K78	FAN, COOLING, 230VAC	
44	* 12"	MM2069K93	FILTER MEDIA	
45	3	MM800E15YE112	E-STOP LEGEND PLATE	
46	* 6	MM9307K69	GROMMET, 1" OD	
47	* 6"	MMT9945	TAPE,REFLECTIVE,2" WIDE	
48	1	ZX5031	V-BELT,1/2X31	

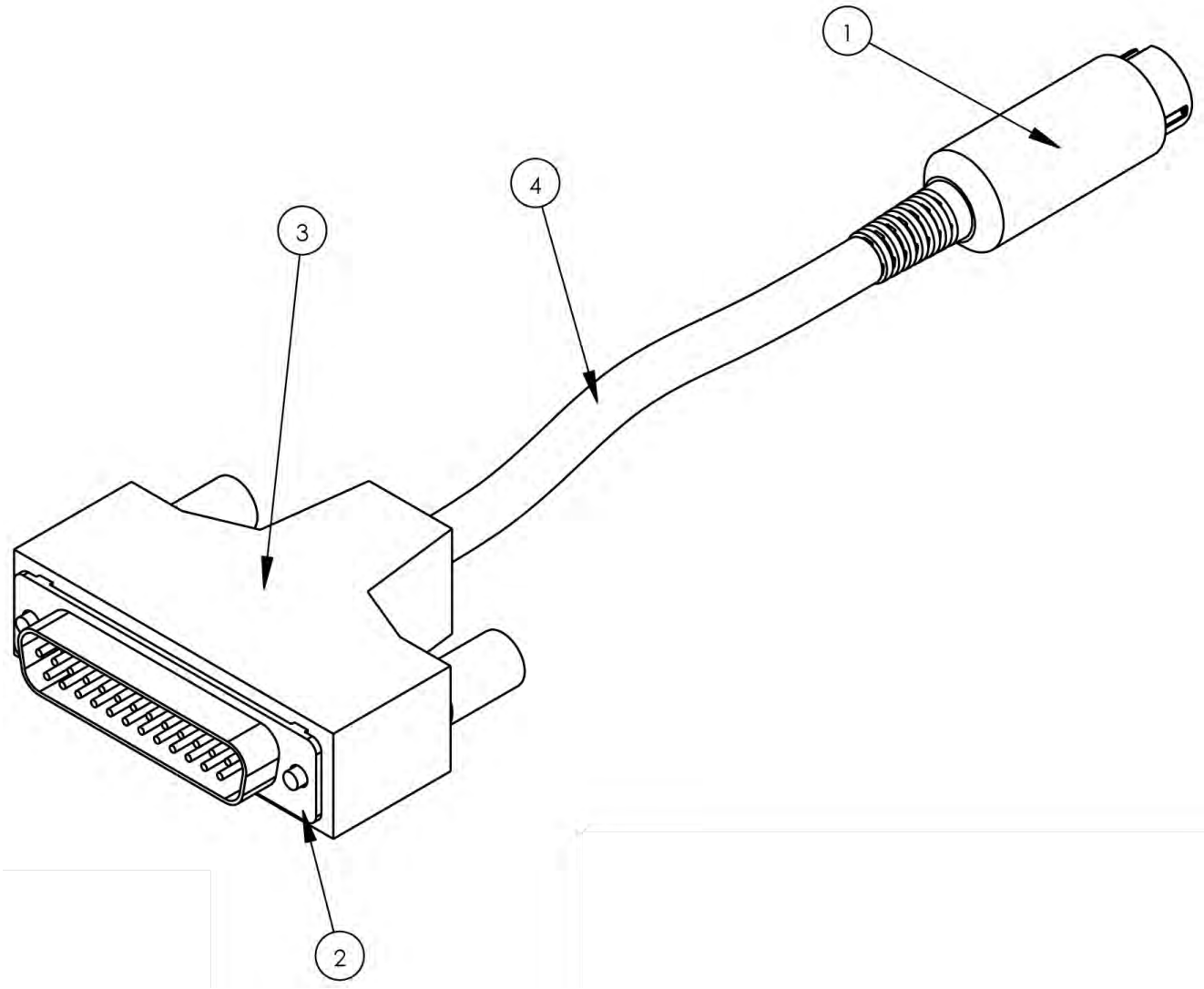

1389747 Touchscreen Cable Assembly

AAC Drawing Number 1389747 Rev 1

NO.	QTY	PART #	DESCRIPTION
1	1	EEMD50	CONN, MINI DIN, 5 PIN, F
2	1	FF17454968	CONN,25 PIN D,M,IDC, 22-2
3	1	FF7451341	CONN,25PIN D,F,SHIELD,BLK
4	* 20 FT	FF8302	CABLE,4 COND,22 AWG

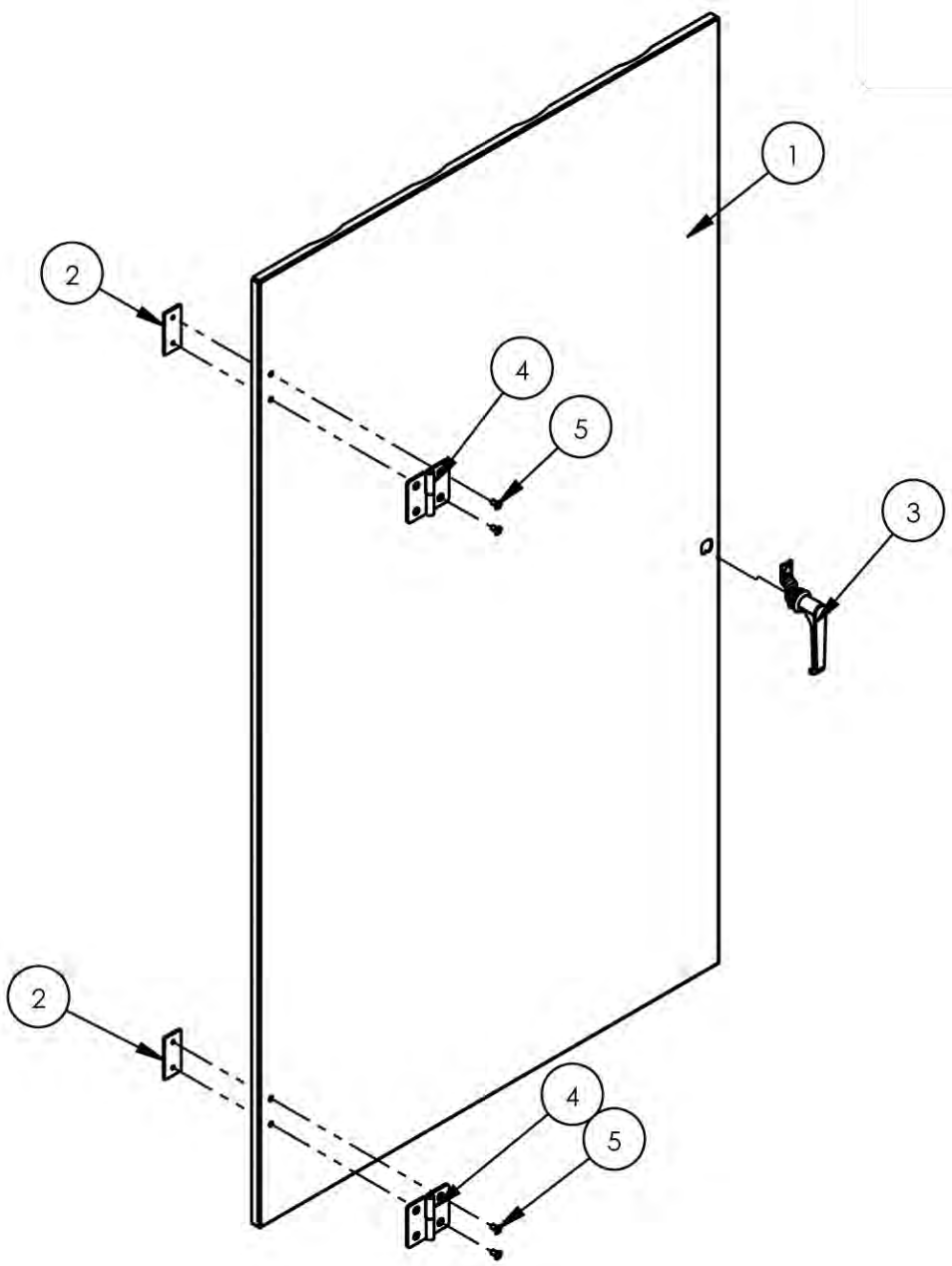

1388549 Right Side Door Assembly

AAC Drawing Number 1388549 Rev 0

NO.	QTY	PART #	DESCRIPTION
1	1	1388548	DOOR, RIGHT SIDE
2	2	1388551	PLATE, HINGE, NUT, M6
3	1	MMELH149	LATCH HANDLE
4	2	SHHPSLC845	HINGE,LH,DETACHABLE
5	4	SSFCM6X12	SCREW,FLAT ALLEN CAP

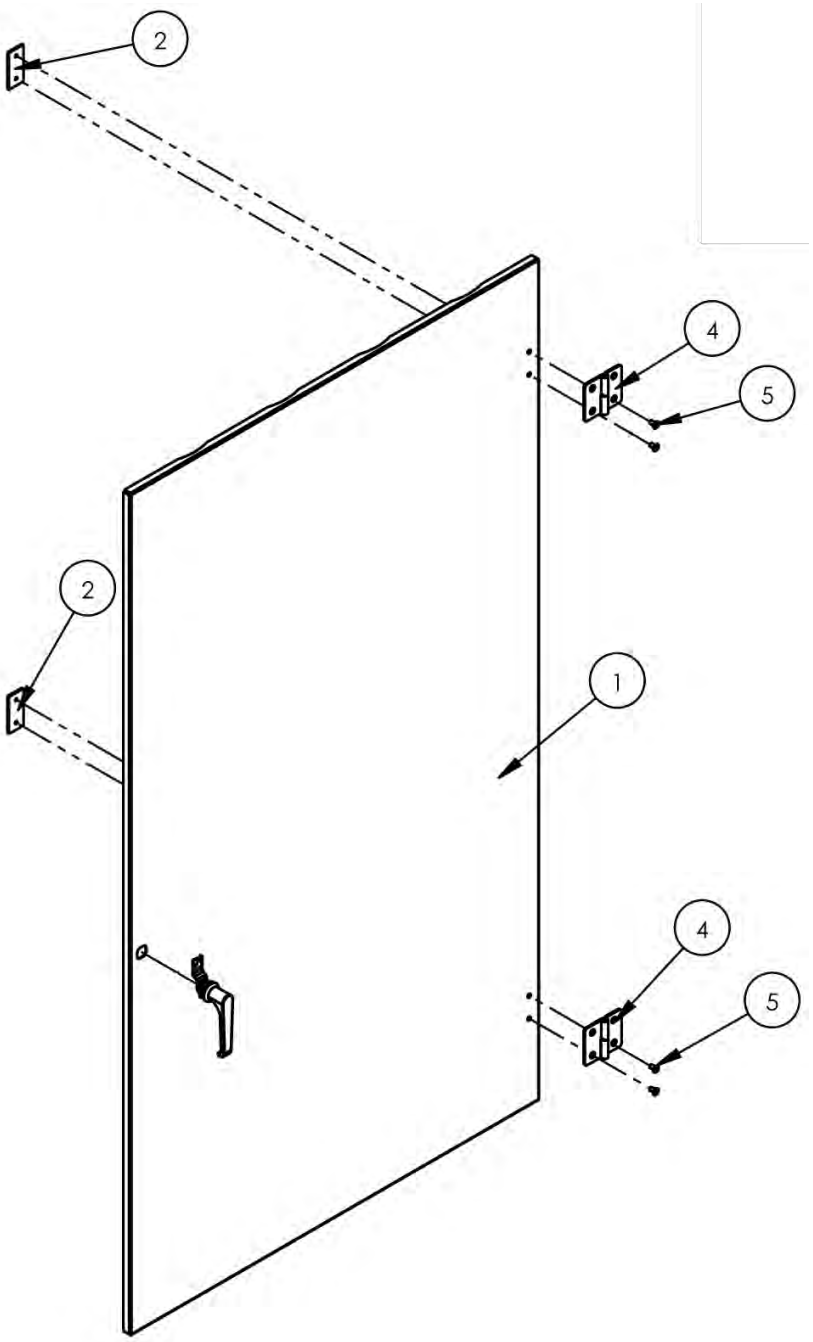

1388550 Left Side Door Assembly

AAC Drawing Number 1388550 Rev 0

NO.	QTY	PART #	DESCRIPTION
1	1	1388547	DOOR, LEFT SIDE
2	2	1388551	PLATE, HINGE, NUT, M6
3	1	MMELH149	LATCH HANDLE
4	2	SHHPSRC845	HINGE,RH,DETACHABLE
5	4	SSFCM6X12	SCREW,FLAT ALLEN CAP

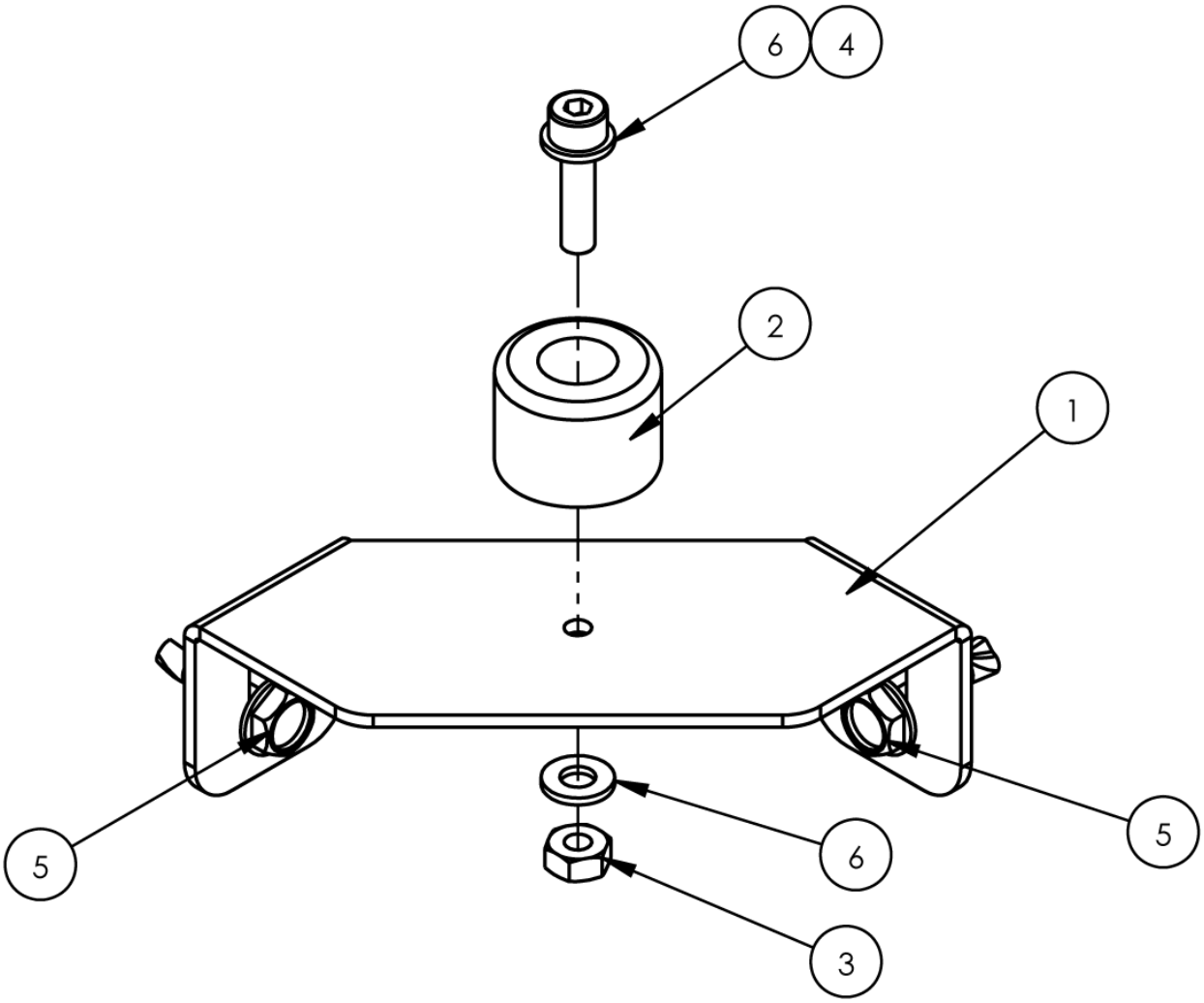

1388559 Door Stop/Bumper Assembly

AAC Drawing Number 1388559 Rev 0

NO.	QTY	PART #	DESCRIPTION
1	1	1388557	PLATE, DOOR STOP
2	1	MM9540K22	BUMPER, 3/4 DIA
3	1	NNHM4X0.7	NUT,HEX,M4-0.7
4	1	SSSCM4X16	SCREW,SOCKET CAP
5	2	SSZS93048	SCREW, SHT.METAL 10 ZIP
6	2	WWFM4.3	WASHER, FLAT, M4

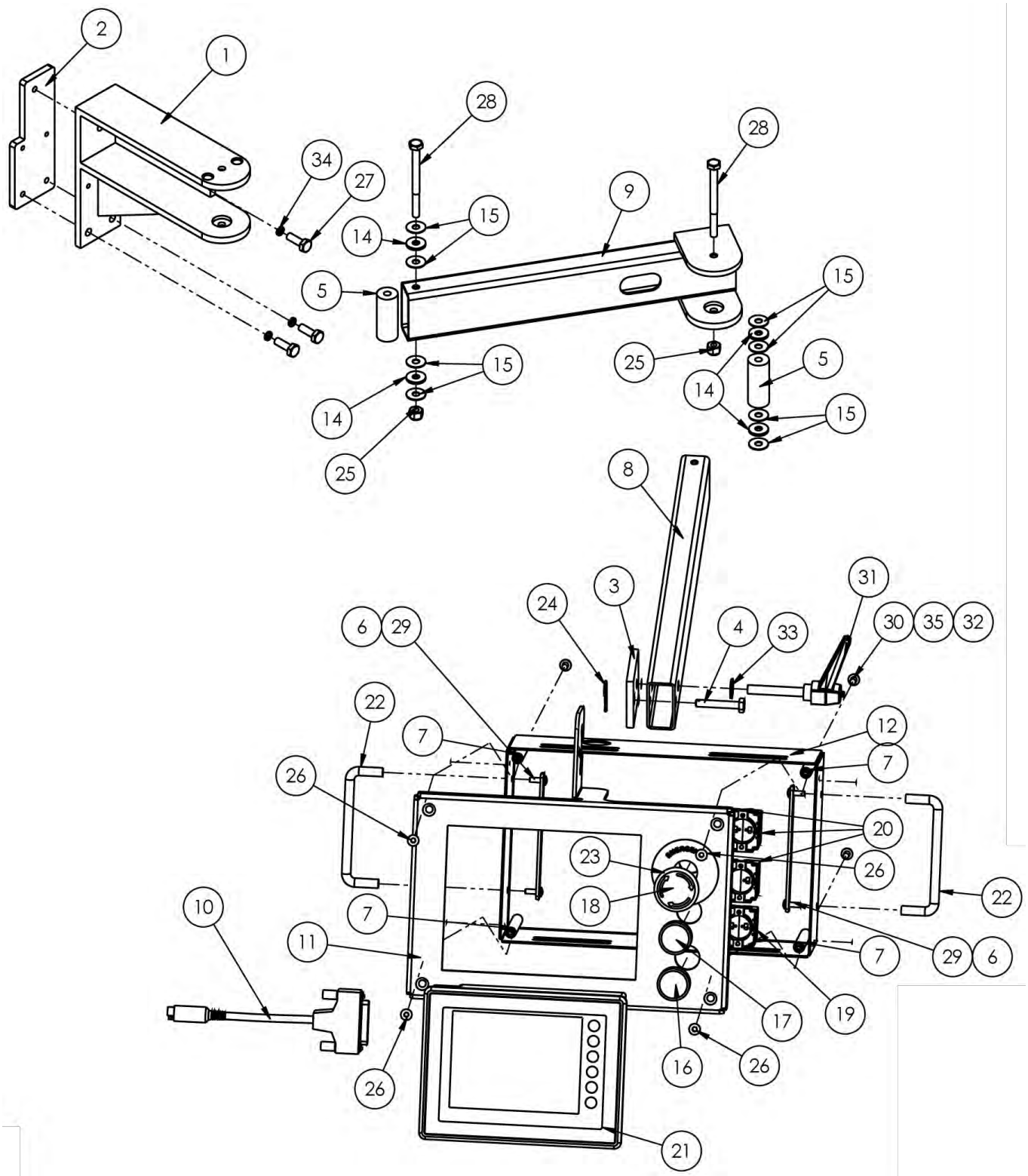
2
1
28
28
34
27
9
15
14
5
15
25
5
15
14
14
15
25
8
3
31
24
6
29
4
33
30
35
32
22
7
12
7
26
20
23
26
22
18
10
7
11
7
29
6
17
19
16
26
26
21

1388415 Swivel Arm Assembly

AAC Drawing Number 1388415 Rev 3

NO.	QTY	PART #	DESCRIPTION
1	1	0411-114	WELDMENT,SWIVEL BASE
2	1	0411-3705	NUT PLATE,BASE MOUNT
3	1	0411-3708	NUT PLATE,BOX MOUNT
4	1	0411-3709	LOCK PIN
5	2	0411-3712	TUBE, SPACER, TALL
6	2	1379215	PLATE, WASHER, HANDLE
7	4	1388685	STANDOFF, .5" X 3",M5
8	1	1389681	TUBE,12 L,PIVOT ARM
9	1	1389701	WLDMT,PIVOT ARM
10	1	1389747	CABLE, TOUCHSCREEN, ASSY
11	1	1389870	MOUNT,TOUCHSCREEN
12	1	1389872	COVER,BACK,TOUCHSCREEN
*13	1	1393E-LAB1	PANEL BACK,LABEL
14	4	BBNTA411	BEARING,THRUST,.250B
15	8	BBTRA411	WASHER,THRUST,STEEL
16	1	EE2AF3	OPERATOR, FLUSH,GREEN
17	1	EE2AF4	OPERATOR, FLUSH,RED
18	1	EE2AML4	OPERATOR, E-STOP,RED
19	2	EES1	CONTACT BLOCK, NO
20	3	EES2	CONTACT BLOCK, NC
21	1	EEV606EM20	TOUCH SCREEN FOR 1393
22	2	MM1568A45	HANDLE,DOOR,PULL
23	1	MM98335A04	SPRING CLIP, .06 WIRE
24	2	NNE1/4-20	NUT,ELASTIC LOCK,1/4-20
25	4	SSFCM5X10	SCREW,FLAT ALLEN CAP
26	3	SSHC01048	1/4-20 X 3/4 HEX CAP
27	2	SSHC01192	HEX HEAD BOLTS, 1/4-20 X
28	4	SSPP90032	SCREW, PAN HD PHILLIPS,8-32X1/2
29	4	SSPP98032	10-32 X 1/2 PAN PHIL
30	1	TTH32429	HANDLE,THRD,5/16-18X2.0
31	4	WWFM5	WASHER, FLAT, M5 I.D.
32	1	WWFS5/16	WASHER,FLAT,SAE,5/16
33	3	WWL10	WASHER,LOCK,#10
34	4	WWLM5	M5 LOCK WASHER
35	1	MM800E15YE112	E-STOP LEGEND PLATE

Page 34

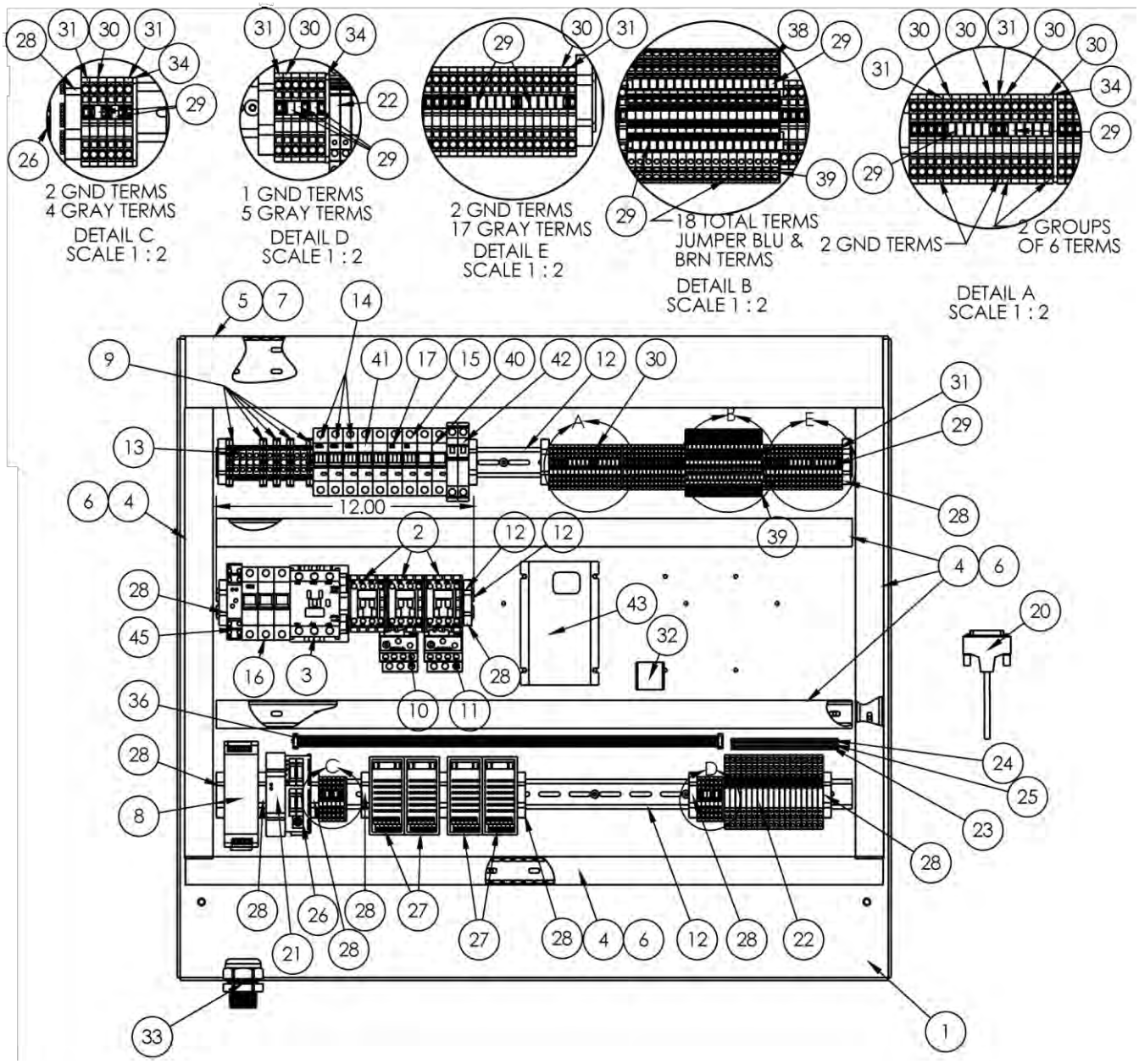
2 GND TERMS
4 GRAY TERMS
DETAIL C
SCALE 1 : 2
1 GND TERMS
5 GRAY TERMS
DETAIL D
SCALE 1 : 2
2 GND TERMS
17 GRAY TERMS
DETAIL E
SCALE 1 : 2
18 TOTAL TERMS
JUMPER BLU &
BRN TERMS
DETAIL B
SCALE 1 : 2
2 GND TERMS
2 GROUPS
OF 6 TERMS
DETAIL A
SCALE 1 : 2
12.00

1388617 Electrical Back Panel Assembly

AAC Drawing Number 1388617 Rev 5

NO.	QTY	PART #	DESCRIPTION
1	1	1388306	BACK PANEL WELDMENT
2	* 4	1388416	CABLE, 10 CON RIBBON
3	1	1389882	CABLE, TOUCHSCREEN, ASSY
4	1	AAFP0-C32T-A	CONTROLLER,PLC,W/32 I/O
5	1	EE64151B	FERRITE CORE,SPLIT,CABLE
6	14	EECLIPFIX	ANCHOR,DIN RAIL
7	11.15 FT	EEDC1LG	DUCT,WIRE COVER,1"
8	2.71 FT	EEDC3X2	DUCT,WIRE COVER,3"
9	11.15 FT	EEDF1X2	DUCT,WIRE,1X2
10	2.71 FT	EEDF3X2	DUCT,WIRE,3X2
11	1	EEDR12024	POWER SUPPLY, 24VDC
12	5	EEEK635	TERMINAL BLOCK, EK2.6/35
13	1	EEHRN56240	RELAY,3-PHASE MONITOR
14	4	EEIMRC10	MODULE,INTERFACE,10
15	3	EEMC12B11	CONTACTOR,IEC,230VAC
16	1	EEMC32A22	CONTACTOR,IEC,230VAC
17	1	EEMT32S6A	RELAY,OVERLOAD,4.0-6.0A
18	1	EEMT32S25A	RELAY,OVERLOAD,1.6-2.5A
19	18	EEPIR6W1P24	RELAY,INTERFACE,24VDC
20	8	EESAK6EN	TERMINAL BLOCK, SAK6/EN
21	1	EESR103AM01	SAFETY RELAY, DUAL CHAN.
22	71.25"	EETS35X7.5A	DIN RAIL-AMERICAN
23	* 2	EEZG20-1	JUMPER,RELAY,RED
24	* 2	EEZG20-2	JUMPER,RELAY,BLACK
25	* 2	EEZG20-3	JUMPER,RELAY,BLUE
26	3	FF280-308	TERMBLK ENDPLATE,WAGO,280
27	1	FF280-319	TERMBLK,WAGO,SENSOR,DIN
28	61	FF280-402	JUMPER,WAGO,TOP,SNGL
29	18	FF280-560	TERMBLK,WAGO,SENSOR,DIN
30	57	FF280-901	TERMBLK,WAGO,TOP,SNGL,GRY
31	7	FF280-907	TERMBLK,WAGO,TOP,SNGL,GRN
32	1	FFL722C	BREAKER, CIRCT. THERM-MAG
33	1	FFL762C	CIRCUIT BREAKER,THERM-MAG
34	1	FFL821B	CIRCUIT BREAKER,B-CURVE
35	1	FFL841B	CIRCUIT BREAKER,B-CURVE
36	3	FFL7161C	CIRCUIT BREAKER,THERM-MAG
37	1	FFL7323C	CIRCUIT BREAKER,THERM-MAG
38	500	FFLS11427	LABELS,AAC ROUND,BLK/WHT
39	1	FFQL213DMKM15	CIRCUIT BREAKER,15A,2P
40	1	MM69915K72	STRAIN RELIEF, LIQ TIGHT
41	1	MMSM210S	DRIVE,VARIABLE FREQUENCY
42	17	SSBCM5X8	SCREW,BUTTON CAP

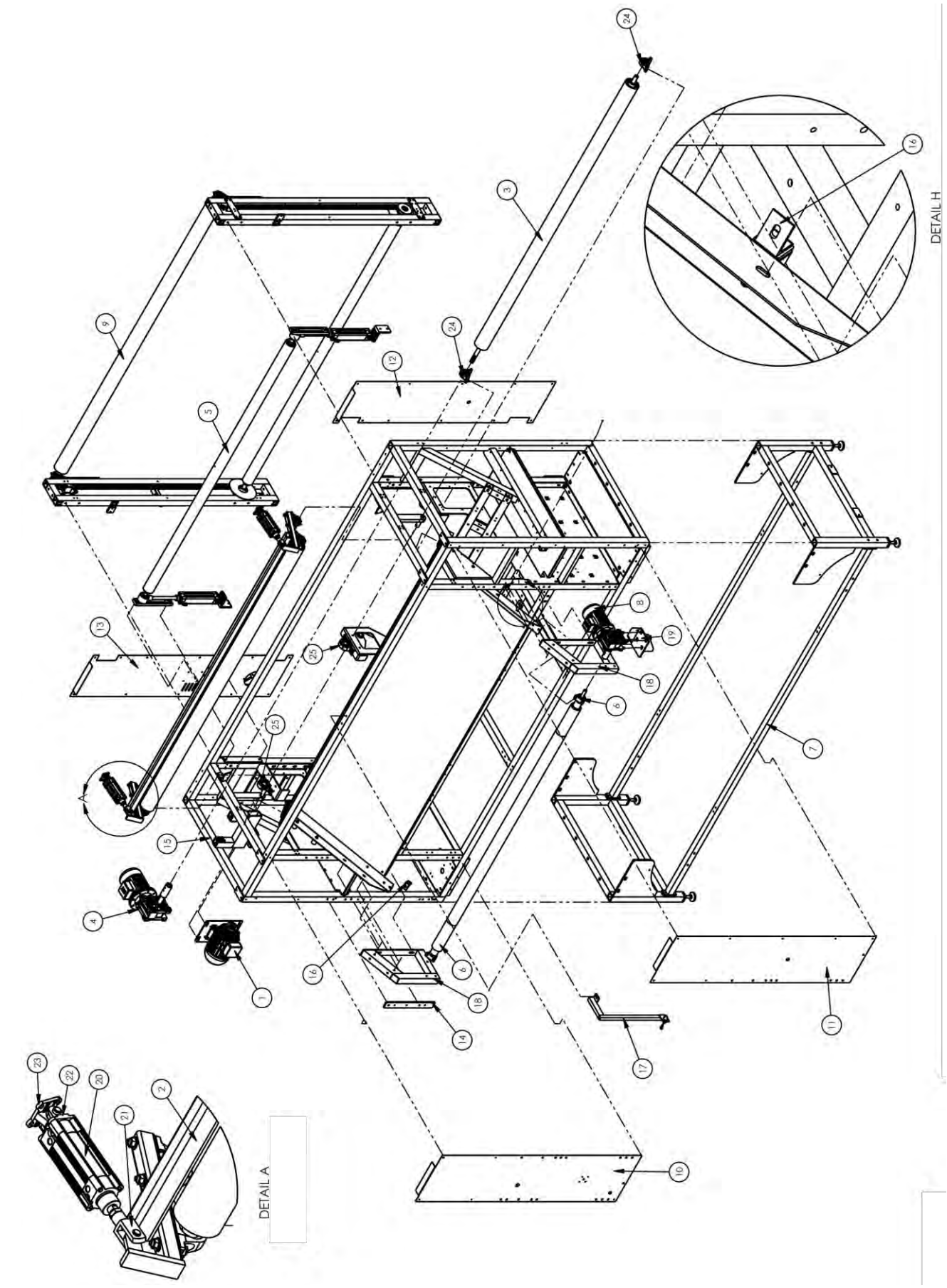
DETAIL H
DETAIL A

1388627 Sub Frame Assembly

AAC Drawing Number 1388627 Rev 0

NO.	QTY	PART #	DESCRIPTION	
1	1	1388276	SLITTER, MOTOR DRIVE ASM	Page 44
2	1	1388317	TOP ROLLER ASSEMBLY	Page 45
3	1	1388328	INFEED DRIVE ROLLER ASM	
4	1	1388331	INFEED ROLL DRIVE ASM	Page 46
5	1	1388333	BORDER LIFT ROLL ASM	Page 47
6	1	1388343	OUTFEED DRIVE ROLL ASM	Page 48
7	1	1388443	SNGL PLY CUTTER LEG ASM	
8	1	1388444	SPPC OUTFEED MTR ASM	Page 49
9	1	1388572	DANCER ASSEMBLY	Page 57
10	1	1388581	PANEL,BACK RIGHT	
11	1	1388582	PANEL,BACK LEFT	
12	1	1388583	PANEL,FRONT LEFT	
13	1	1388584	PANEL, FRONT LEFT WELDMNT	
14	1	1388602	PLATE, SPACER, TOUCHSCR	
15	1	1388628	FRAME, ASSEMBLY	
16	2	1388635	BRACKET, TABLE SUPPORT	
17	1	1389078	MATERIAL SENSOR, X CUT	Page 54
18	2	1389667	WLDMT,DISCHARGE SUPPORT	
19	1	1389672	WLDMT,GEARBOX MTG	
20	2	AACDNCB5080PPVA	CYLINDER,AIR,ISO,50BX80	
21	2	AAFSGM16X1.5	CLEVIS ROD M16X1.5	
22	2	AAFSNC50	FLANGE, SWIVEL, FOR DNCB50	
23	2	AAFSNCS50	CLEVIS SINGLE REAR W/PIN	
24	2	BBNAP205-25	BEARING, PILLOWBLOCK	
25	3	MMUCP206-20	PILLOW BLOCK BEARING,UCP-206-20	

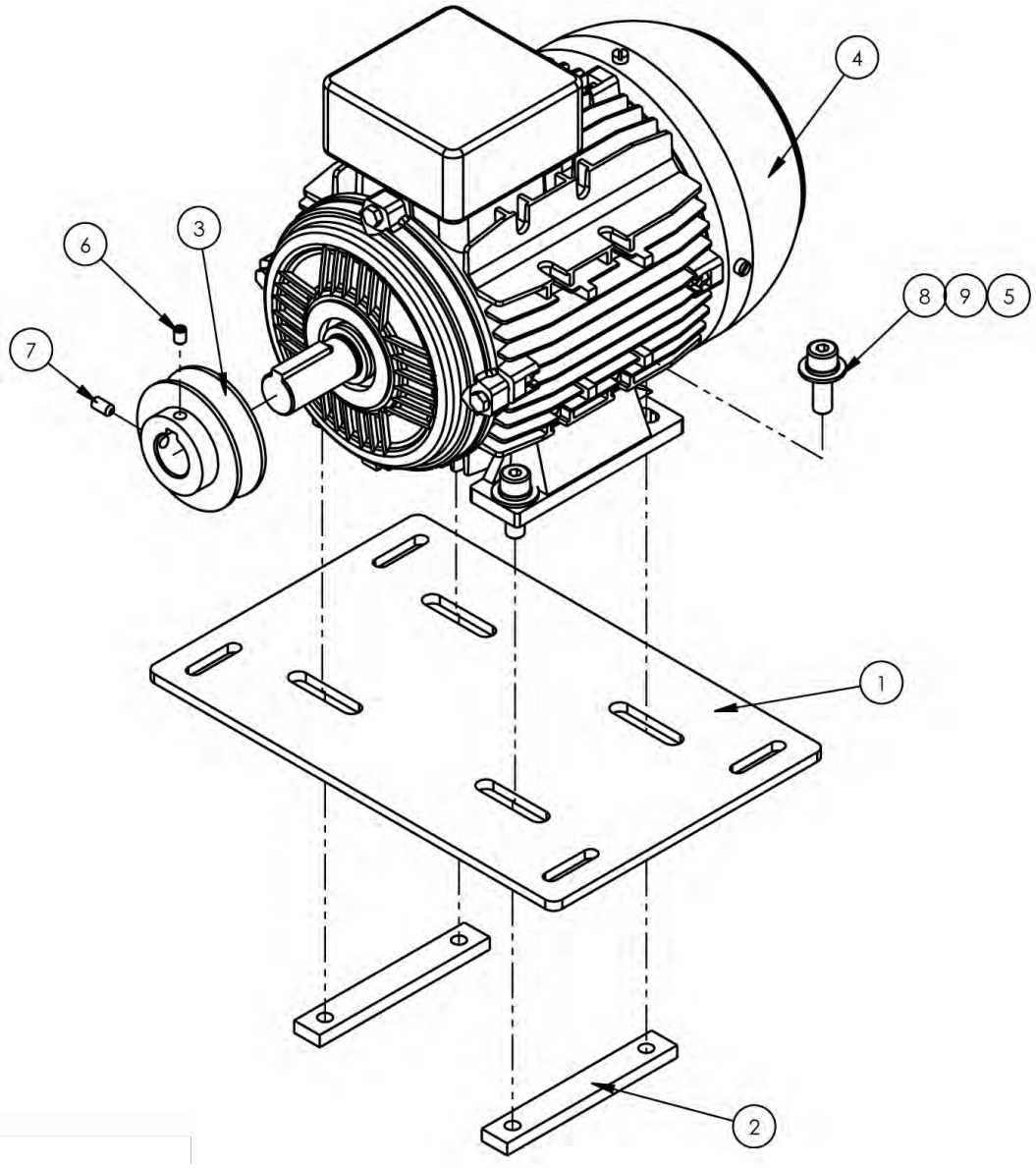

1388276 Slitter Motor Drive Assembly

AAC Drawing Number 1388276 Rev 0

NO.	QTY	PART #	DESCRIPTION
1	1	1388263	PLATE,MOTOR MOUNT
2	2	1388264	NUT PLATE,MOTOR MOUNT
3	1	1389606	PULLEY, SLITTER MOTOR
4	1	MM90S11B3	MOTOR,1.1KW,IEC,B3,1.5HP
5	4	SSSCM10X30	10M X 30MM, SOC CAP
6	1	SSSS01024	SCREW, SET, 1/4-20 X 3/8
7	1	SSSS01032	1/4-20 X 3/8 NYLON PT
8	4	WWFM10	WASHER, FLAT, M10 I.D.
9	4	WWLM10	M10 LOCK WASHER

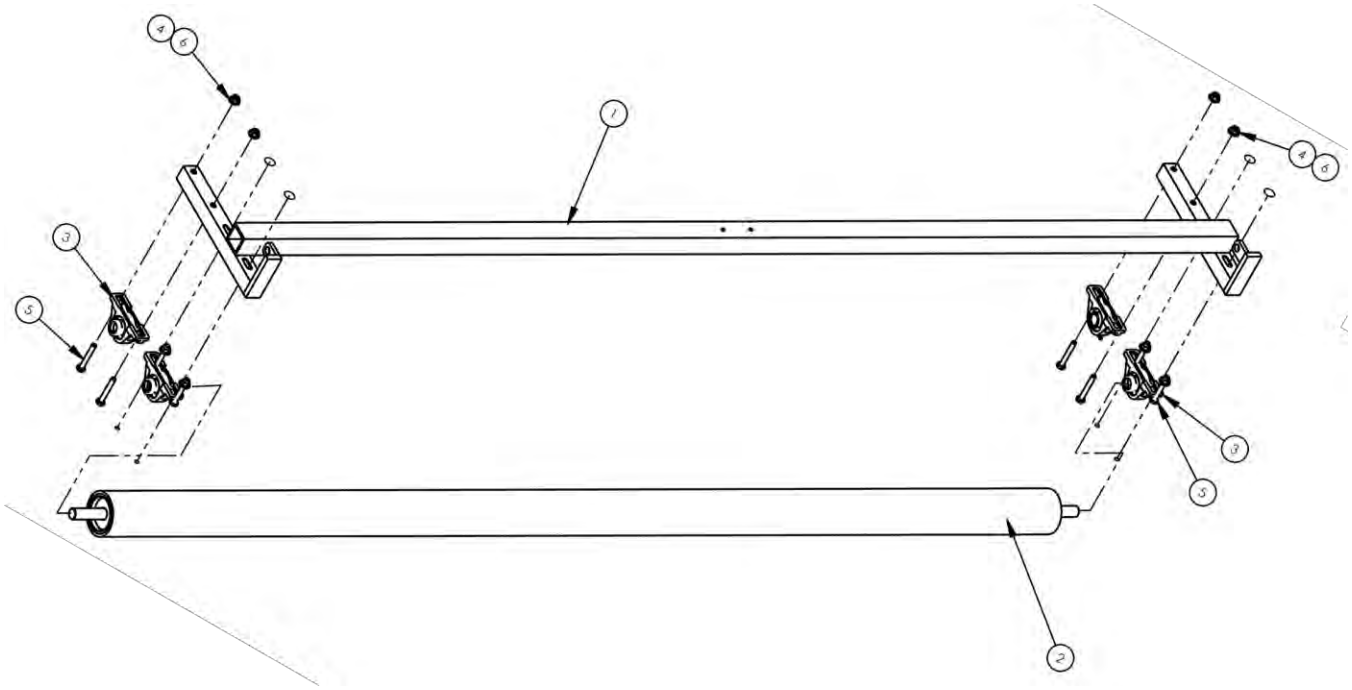

1388317 Top Roller Assembly

AAC Drawing Number 1388317 Rev 0

NO.	QTY	PART #	DESCRIPTION
1	1	1388318	TOP ROLLER WELDMENT
2	1	1388325	INFEED PINCH ROLLER ASM
3	4	BBNAP205-25	BEARING, PILLOWBLOCK
4	8	NNEM10-1.5	NUT,ELASTIC LOCK,M10
5	8	SSHCM10X70	SCREW,HEX CAP,M10-1.5X70
6	8	WWFM10	WASHER, FLAT, M10 I.D.

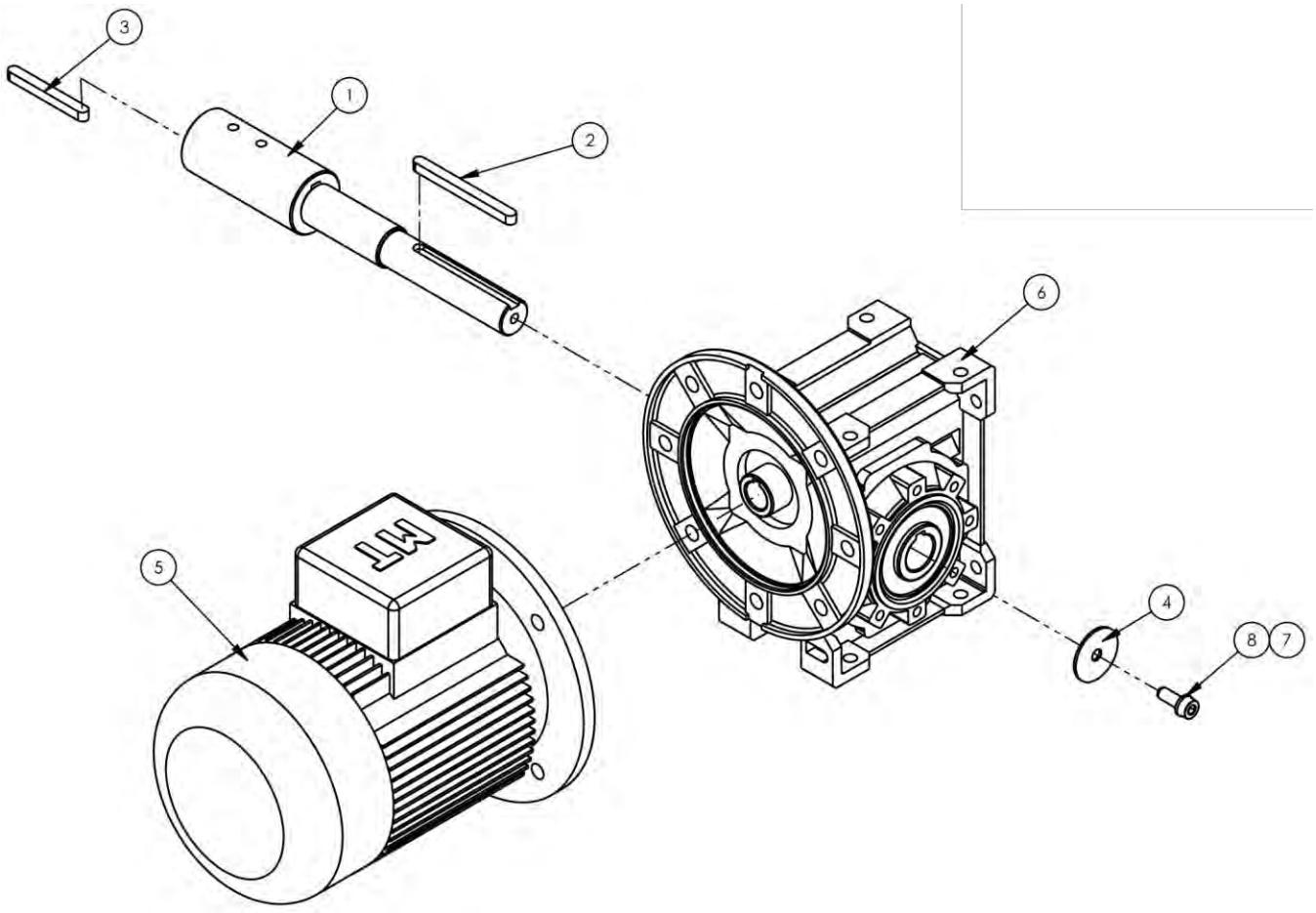

1388331 Infeed Roll Drive Assembly

AAC Drawing Number 1388331 Rev 0

NO.	QTY	PART #	DESCRIPTION
1	1	1388329	STUB,DRIVE SHAFT BEARBOX
2	1	1388330	KEY, INFEED DRIVE
3	1	1388332	KEY, INFEED PULL ROLLER
4	1	1393364	RETAINER WASHER
5	1	MM80B4B5	MOTOR,.75KW,IEC,B5,D80
6	1	MMRV6340D80	GEARBOX,WORM,RV63,40:1
7	1	SSSCM8X20	M8X20 SOC CAP
8	1	WWLM8	M8 LOCK WASHER

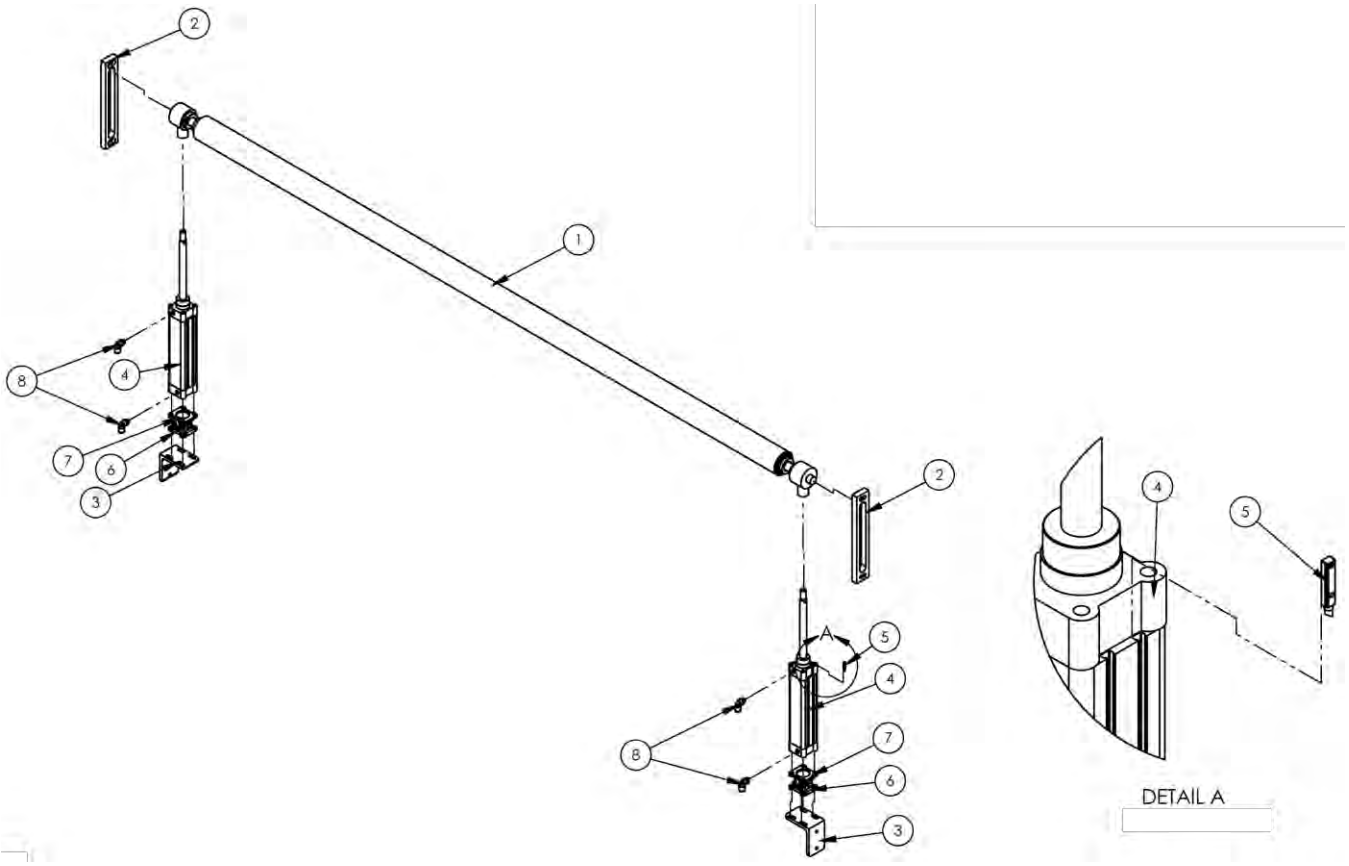

1388333 Border lift Roll Assembly

AAC Drawing Number 1388333 Rev 1

NO.	QTY	PART #	DESCRIPTION
1	1	1388273	SLITTER ROLLER LIFT ASM
2	2	1389087	GUIDE
3	2	1389122	CYLINDER MOUNT
4	2	AACDNC50200PPVA	CYLINDER,AIR,ISO,50B,200S
5	1	AAESME8KLED24	SENSOR FOR FESTO DNCB CYL
6	3	AAFSNC50	FLANGE, SWIVEL, FOR DNCB50
7	2	AAFSNCS50	CLEVIS SINGLE REAR W/PIN
8	4	AAQME-3-4U	MALE ELBOW,3/8OD TUBE 1/4

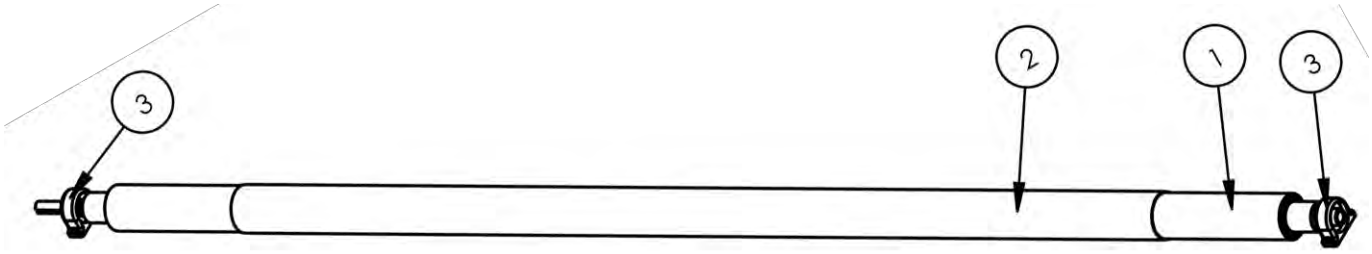

1388343 Outfeed Drive Roll Assembly

AAC Drawing Number 1388343 Rev 0

NO.	QTY	PART #	DESCRIPTION
1	1	1388342	OUTFEED ROLLER WLDMNT
2	* 292 IN	MMV400PS	4.0" VELCRO TAPE BLACK
3	2	UUCPA204-20	BEARING, 20MM ID

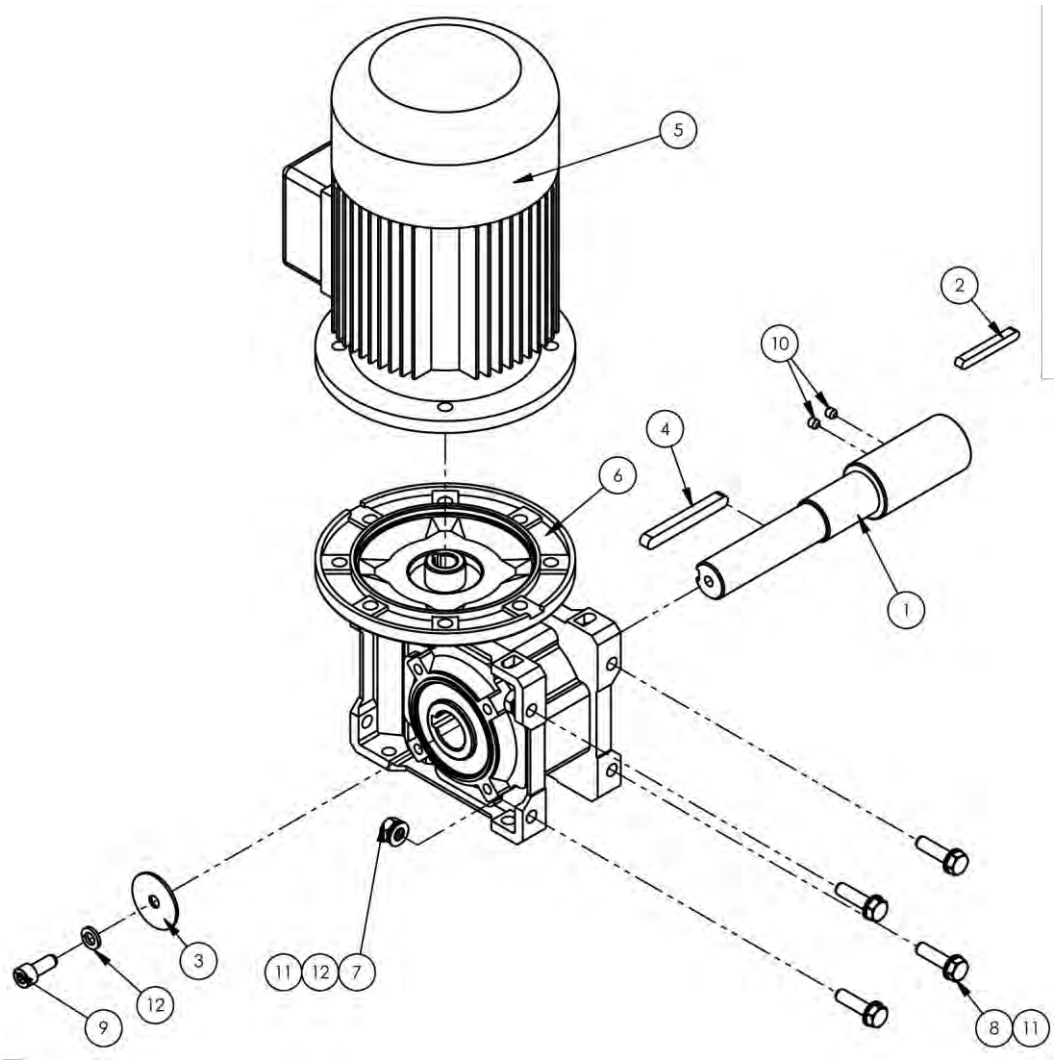

1388444 Outfeed Motor Assembly

AAC Drawing Number 1388444 Rev 1

NO.	QTY	PART #	DESCRIPTION
1	1	1388336	STUB,DRIVE SHAFT GEARBOX
2	1	1388338	KEY, 6X6X50
3	1	1393364	RETAINER WASHER
4	1	1393369	KEY, GEARMOTOR
5	1	MM71B4B5	MOTOR,.37KW,IEC,B5
6	1	MMRV5030D71	GEARBOX,WORM,RV50,30:1
7	4	NNHM8X1.25	M8 X 1.25 HEX NUT
8	4	SSHCM8X30	SCREW,HEX CAP M8X40
9	1	SSSCM8X20	M8X20 SOC CAP
10	2	SSSSM6X6	M6 SET SCREW, 12MM L
11	8	WWFM8	WASHER, FLAT, M8 I.D.
12	5	WWLM8	M8 LOCK WASHER

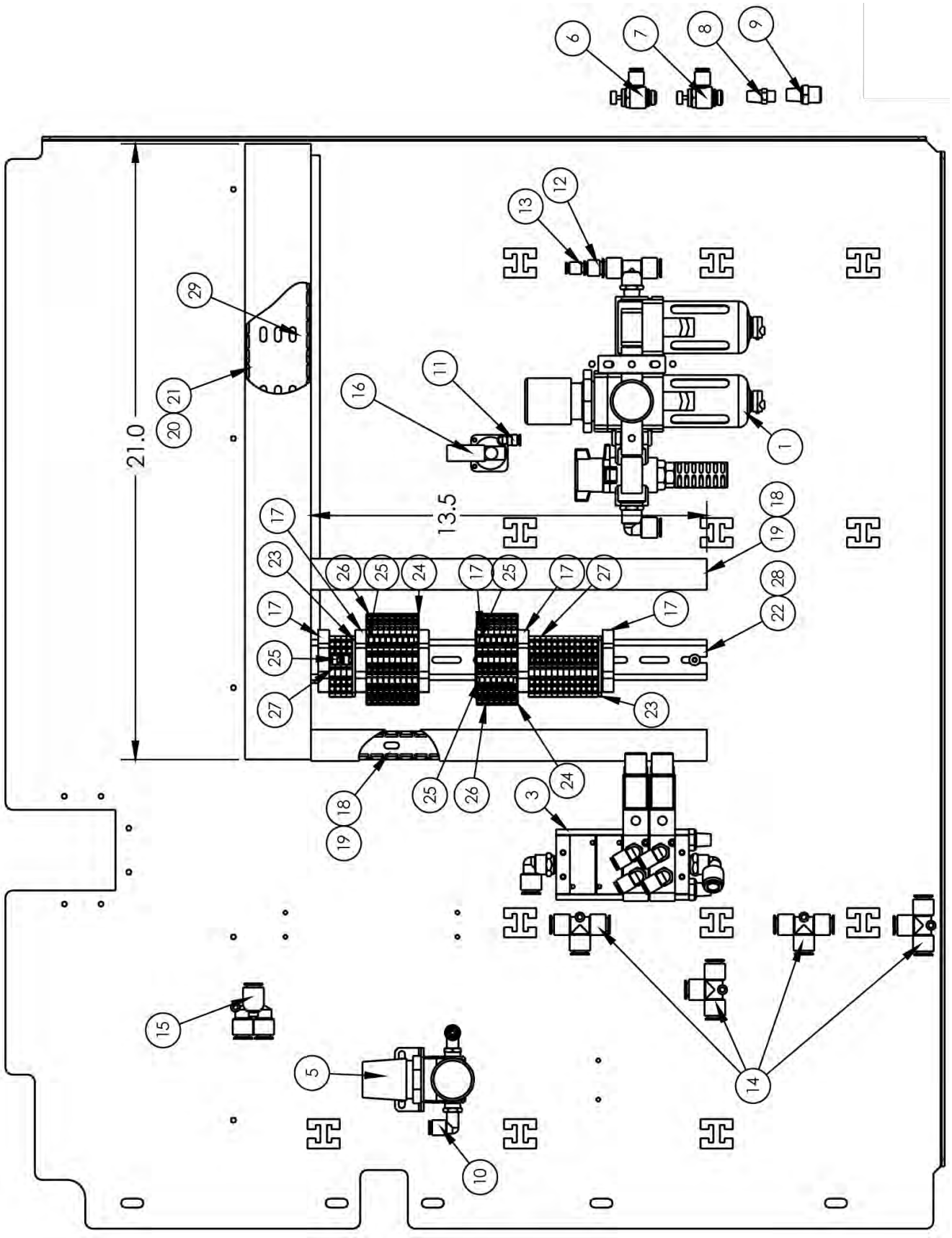
21.0
13.5

1388680 Pneumatic Assembly

AAC Drawing Number 1388680 Rev 1

NO.	QTY	PART #	DESCRIPTION
1	1	1388335	FRL ASSEMBLY, 1393E
2	1	1388570	BACK PANEL, PNUEMATIC
3	1	1388681	SOLENOID,4 VALVE ASM
4	9	1391160	CABLE ASSY,VALVE,DIN,3M
5	1	AA198-508	REGULATOR,0-160 W/GAUGE &
6	* 16	AA198RA404U	FLOW CONTROL,1/4PTX1/4
7	* 2	AA198RR404U	FLOW CONTROL,1/4PTX1/4
8	* 2	AAFP18	MUFFLER,1/8 NPT, BRONZ
9	* 2	AAFP28	MUFFLER,1/4 NPT
10	2	AAQME-4-4U	ELBOW, MALE,1/4X1/4NPT
11	1	AAQME-5-10	ELBOW, MALE,5/32X10-32
12	1	AAQPR-3-4	QUICK REDUCER 3/8-1/4
13	1	AAQPR-5-4	QUICK PLUG-IN REDUCER
14	4	AAQUT-3-3	QUICK UNION T 3/8X3/8
15	1	AAQUY-3-3	QUICK UNION Y,3/8X3/8
16	1	AAVF51FM1B	AIR/ELEC PRESSURE SW
17	6	EECLIPFIX	ANCHOR,DIN RAIL
18	1.42 FT	EED78W308	DUCT,WIRE,.75 X .75
19	1.42 FT	EED78W332	DUCT,WIRE COVER,.75"
20	1.75 FT	EEDC2X2	COVER,WIRE DUCT
21	1.75 FT	EEDF2X2	DUCT,WIRE,2X2, MOD
22	13.50"	EETS35X7.5A	DIN RAIL-AMERICAN
23	2	FF280-308	TERMBLK ENDPLATE,WAGO,280
24	2	FF280-319	TERMBLK,WAGO,SENSOR,DIN
25	22	FF280-402	JUMPER,WAGO,TOP,SNGL
26	16	FF280-560	TERMBLK,WAGO,SENSOR,DIN
27	16	FF280-901	TERMBLK,WAGO,TOP,SNGL,GRY
28	3	SSBCM5X8	SCREW,BUTTON CAP
29	* 47"	ZZZSH-310	TAPE, DOUBLE SIDED,3/4"W

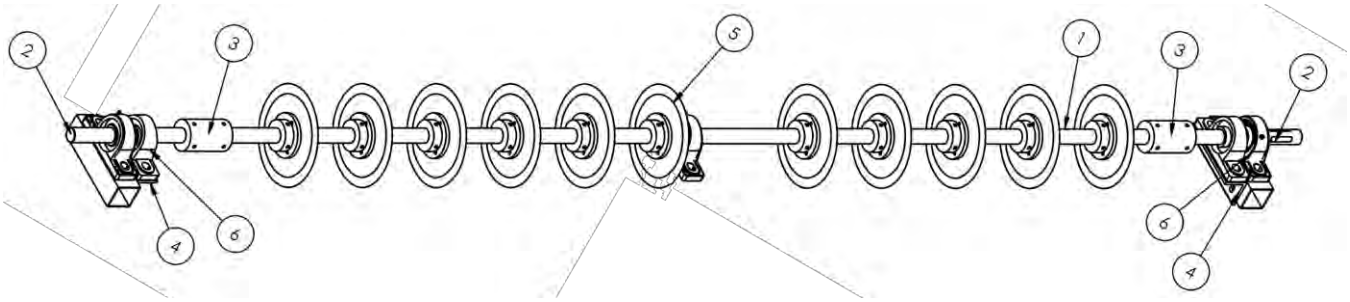

1389860 Split Shaft Slitter Assembly

AAC Drawing Number 1389860 Rev 2

NO.	QTY	PART #	DESCRIPTION
1	1	1389857	DRIVE SHAFT,30MM X 2300MM
2	2	1389858	DRIVE SHAFT, 30MM X 300MM
3	2	1389859	COUPLING,30MM X 4 IN
4	2	1389874	MOUNT,ANGLE,BEARING
5	11	1393149	BSW SLITTER ASSEMBLY
6	5	BBUCP206	BEARING, PILLOWBLOCK

Page 53

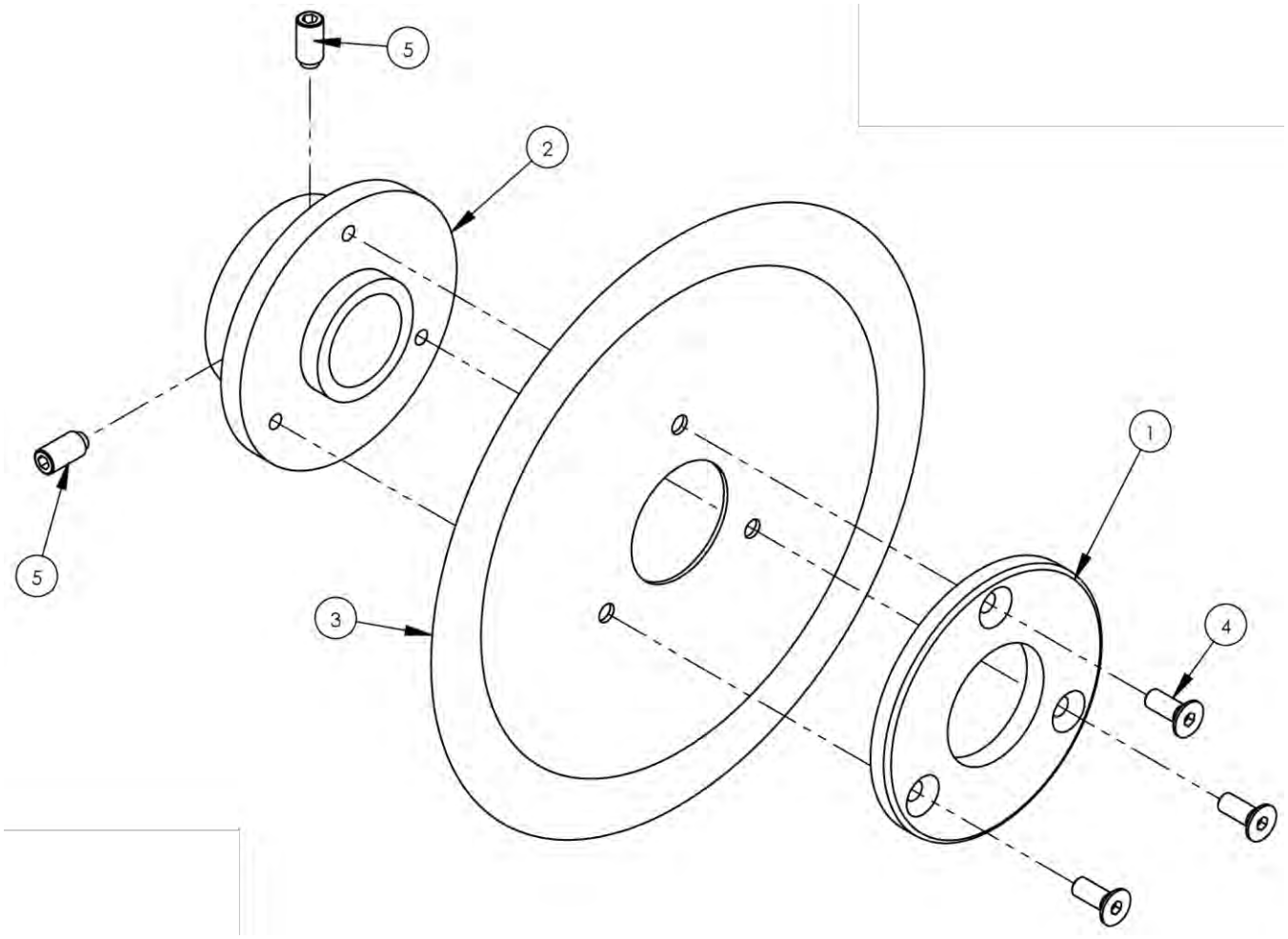

1393149 Slitter Assembly

AAC Drawing Number 1393149 Rev 2

NO.	QTY	PART #	DESCRIPTION
1	1	1389079	BLADE RETAINER
2	1	1389873	BLADE HOLDER
3	1	CJ21100900	BLADE,40MM ID,205MM OD
4	3	SSFCM6X16	M6-1.0 X 16 FLAT ALLEN
5	2	SSSSM8X16BT	M8X16 SOC SET, BRASS TIP

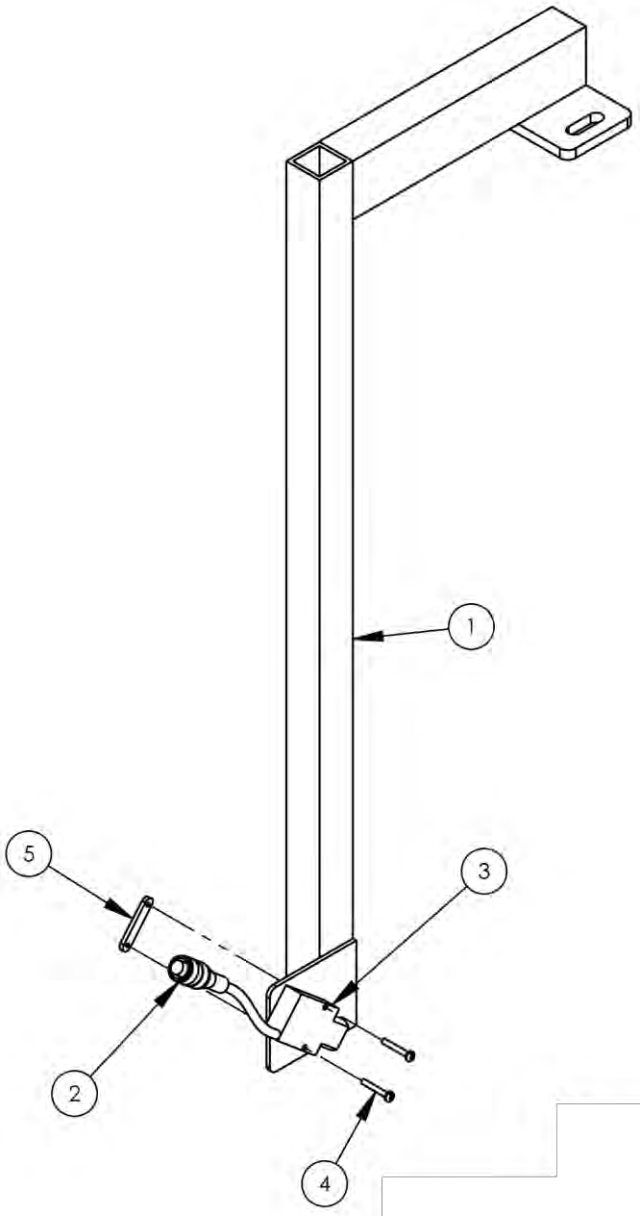

1389078 X cut Material Sensor

AAC Drawing Number 1389078 Rev 1

NO.	QTY	PART #	DESCRIPTION
1	1	1389075	EYE MOUNTING BRACKET
2	1	FFRK44T-4	CABLE,EYE,12',NO END
3	1	FFSM312LVQ	EYE,ELECTRIC,10-30VDC
4	2	SSPS70048	4-40 X 3/4 PAN HD SLOTTED
5	1	1975-412A	PLATE,NUT,4-40,.95CTC

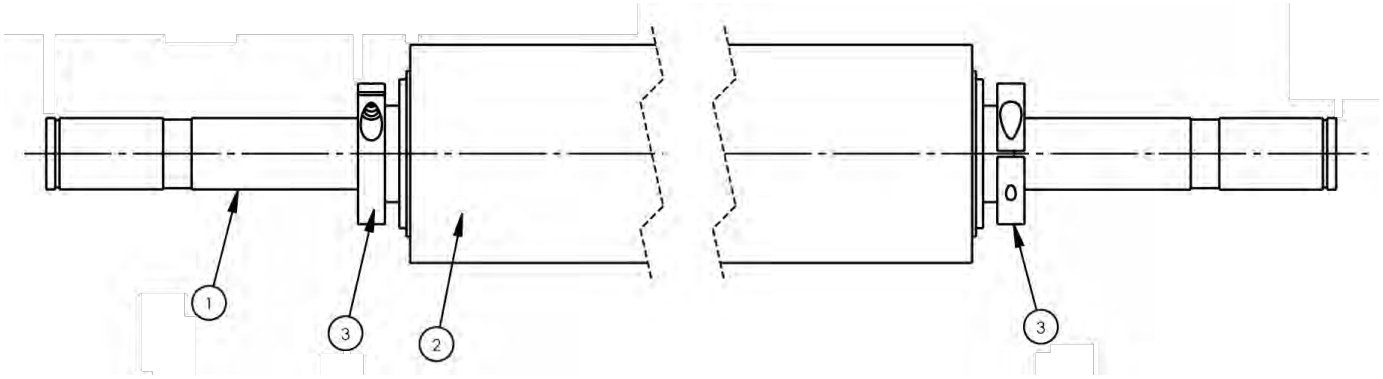

1388578 Dancer Roller Assembly

AAC Drawing Number 1388578 Rev 0

NO.	QTY	PART #	DESCRIPTION
1	1	1388577	SHAFT, DANCER ROLLER
2	1	1388579	ROLLER, DANCER ASSY
3	2	BBGER205-25	BEARING,BALL,25MMB,CLAMP

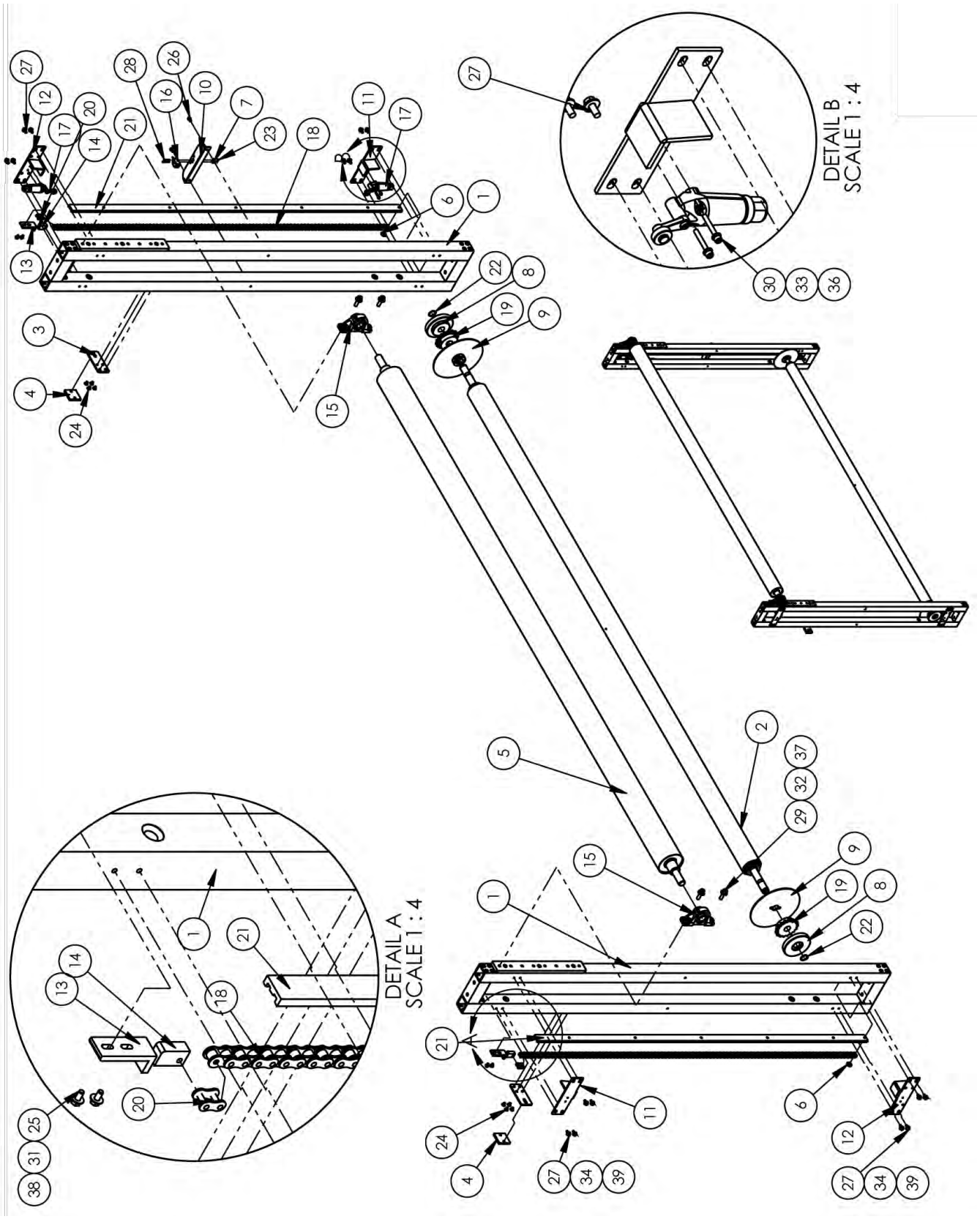
DETAIL B
SCALE 1 : 4
DETAIL A
SCALE 1 : 4

1388572 Dancer Assembly

AAC Drawing Number 1388572 Rev 4

NO.	QTY	PART #	DESCRIPTION	
1	2	1388571	DANCER FRAME ASSEMBLY	
2	1	1388578	DANCER ROLLER ASM	Page 55
3	2	1388593	PLATE, REAR GUARD MOUNT	
4	2	1388676	PLATE,NUT,M8 TAPPED	
5	1	1389110	ROLLER, BSW	
6	2	1392900	WASHER, CHAIN HOLDOWN	
7	1	1393373	PLATE, NUT, 4-40	
8	2	1493222	WHEEL, RETAINER FOR	
9	2	1493226	EDGE GUIDE ASSY	Page 58
10	1	1493232	MOUNT, ACCUMULATOR PROX.	
11	2	1493233	BRACKET, LIMIT, LOWER	
12	2	1493234	BRACKET, LIMIT, UPPER	
13	2	1493507	BRKT,BELT TENSION	
14	2	1493508	BLOCK,TENSION	
15	2	BBNAP205-25	BEARING, PILLOWBLOCK	
16	1	EENI5Q18AN6X	SENSOR, PROX. NPN,10-30DC	
17	2	FFEVN2000A	LIMIT SWITCH ASSEMBLY	
18	2	MM50	CHAIN, SINGLE STRAND	
19	2	MM50B17M	STEEL SPROCKET,17T,5/8P	
20	2	MM50L	LINK,MASTER,5/8P,SGL STRD	
21	2	MM93095K32M	GUIDE, CHAIN WITH HOLES	
22	2	MMSH-98	RING,SNAP,EXTERNAL	
23	2	NNH4-40	NUT,HEX,#4-40	
24	8	SSFCM6X10	M6 X 20 FLAT ALLEN	
25	4	SSHCM5X12	SCREW, HEX CAP	
26	2	SSHCM6X12S	SCREW, HEX M6X12 SS	
27	16	SSHCM6X16	SCREW, HEX M6X16	
28	2	SSSC70064	4-40 X 1 SOCKET CAP	
29	4	SSSCM10X35	CAP SCREW 10MM X 35MM	
30	2	SSSCM4X30	SCREW,SOC CAP,M4-0.7X30	
31	4	WWF10	WASHER, FLAT, #10, COM	
32	4	WWFM10	WASHER, FLAT, M10 I.D.	
33	2	WWFM4.3	WASHER, FLAT, M4	
34	16	WWFS1/4	WASHER,FLAT,SAE,1/4	
35	2	WWL4	WASHER,LOCK,#4	
36	2	WWL8	WASHER,LOCK,#8	
37	4	WWLM10	M10 LOCK WASHER	
38	4	WWLM5	M5 LOCK WASHER	
39	18	WWLM6	M6 LOCK WASHER	

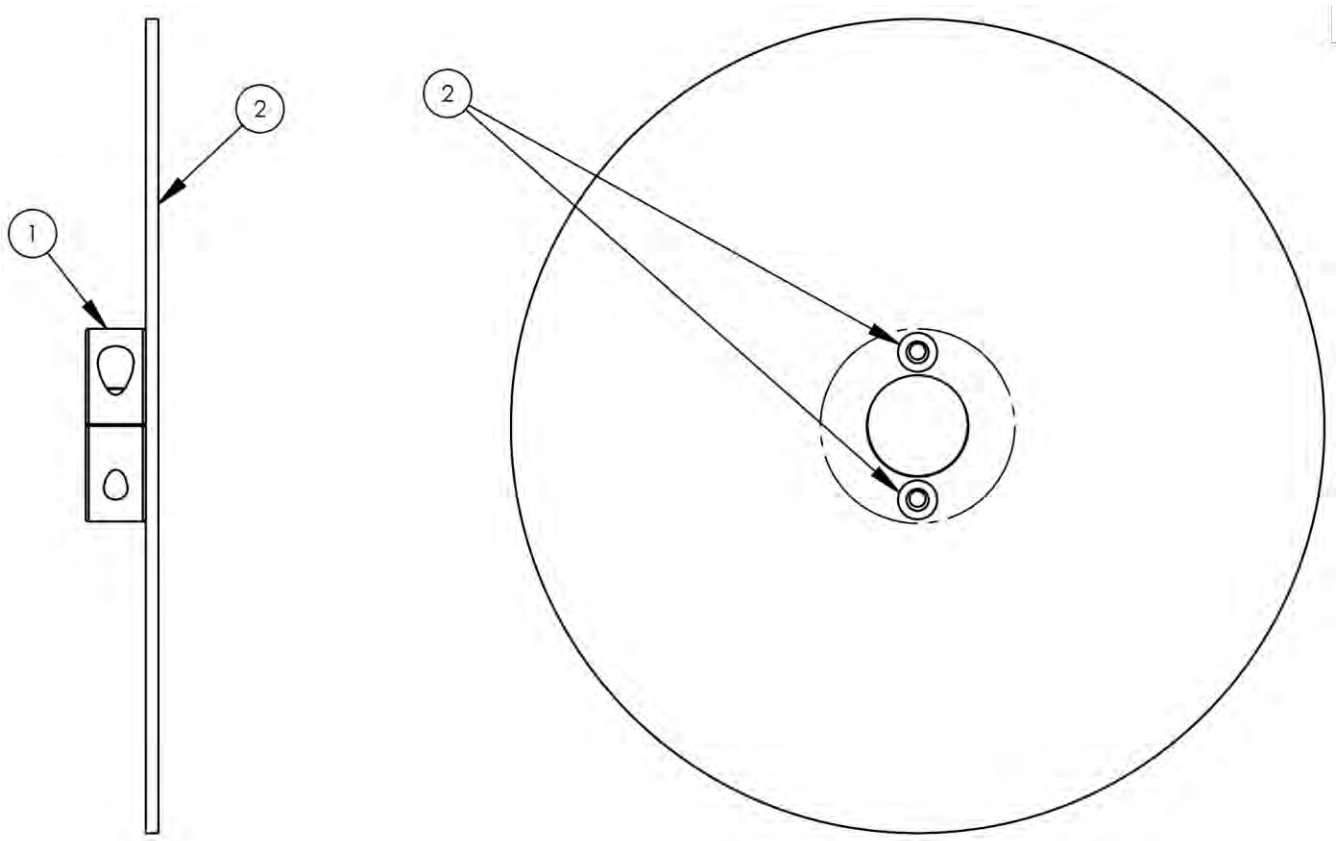

1493226 Edge Guide Assembly

AAC Drawing Number 1493226 Rev 0

NO.	QTY	PART #	DESCRIPTION
1	1	1493225	GUIDE PLATE
2	1	CCCLM25FM	COLLAR, CLAMP METRIC 25MM
3	2	SSFC98040	#10-32 X 5/8 FLAT ALLEN

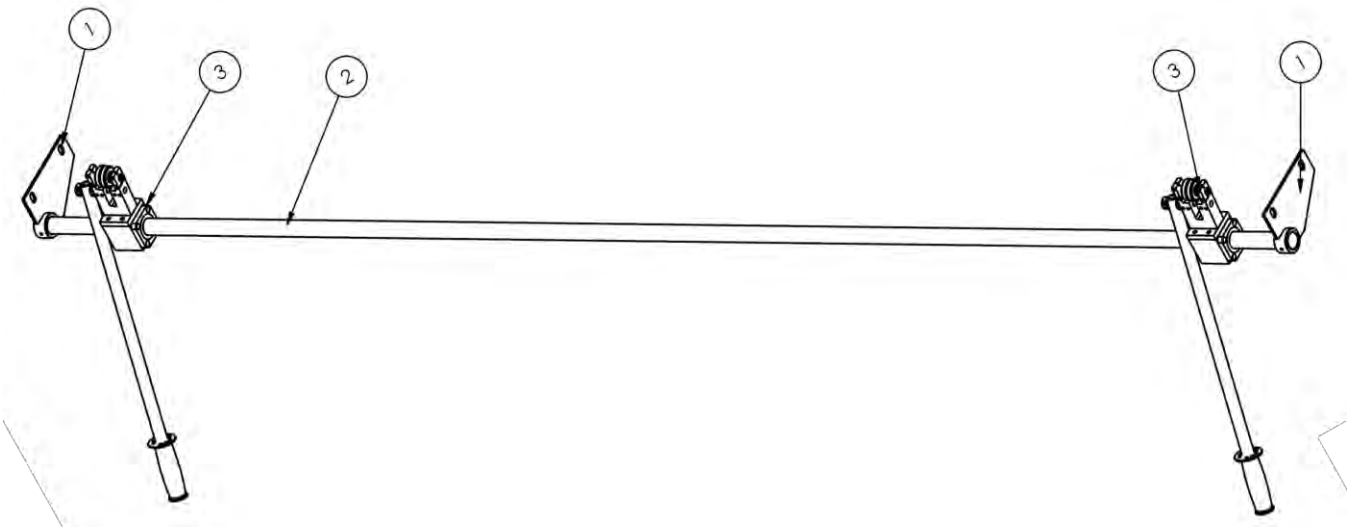

1389896 Slitter Sharpener Assembly

AAC Drawing Number 1389896 Rev 1

NO.	QTY	PART #	DESCRIPTION
1	2	1389875	MOUNT, END, 30MM SHAFT
2	1	1389877	ROD,30MMX2720,60 CASE
3	2	1389884	SHARPENER ASBLY, SLITTERS

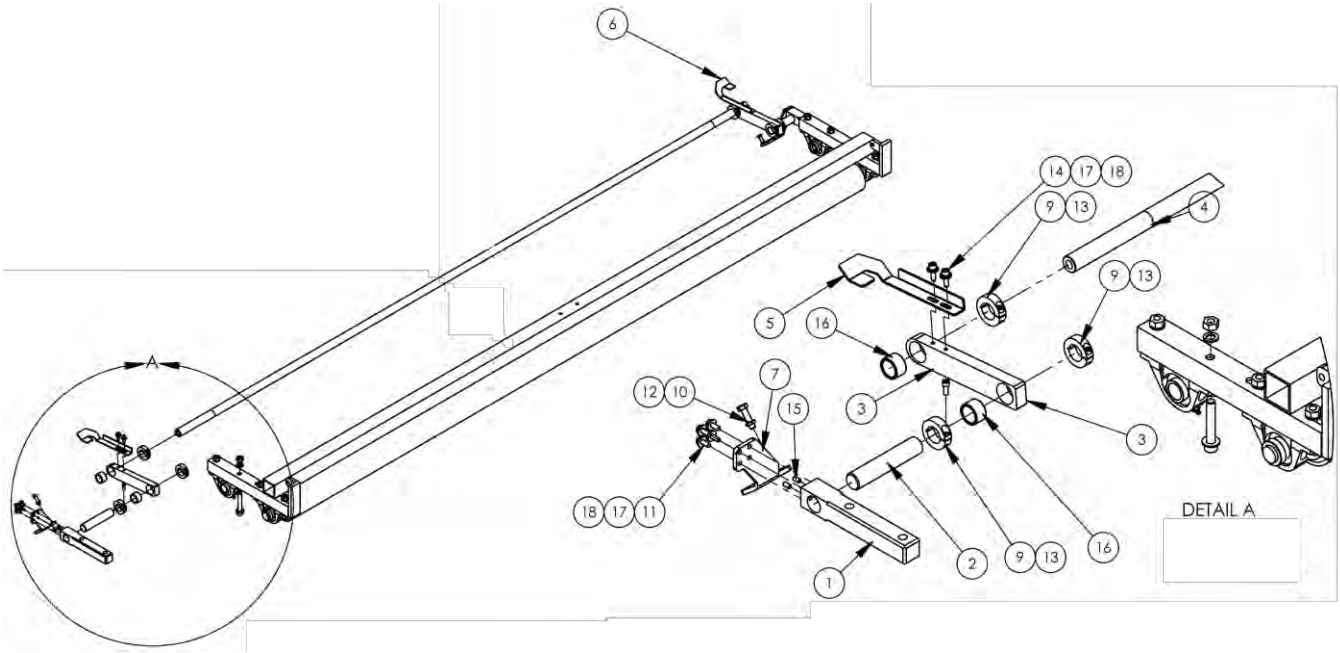

1393-KIT06 Weighted Slitter Bar Assembly

AAC Drawing Number 9002643 Rev 1

NO.	QTY	PART #	DESCRIPTION
1	2	1388141	MOUNT, PIVOT SHAFT
2	2	1388142	SHAFT, STUB, 1" X 5"
3	2	1388143	ARM, SLITTER WEIGHTED BAR
4	1	1388144	BAR, WEIGHTED
5	1	1388145	PLATE, SUPPORT, BAR
6	1	1388146	PLATE, SUPPORT, BAR
7	1	1388677	PLATE, WEIGHTED BAR STOP
8	1	1388678	PLATE, WEIGHTED BAR STOP
9	6	CCCL16F	COLLAR,1" CLAMP TYPE
10	2	NNJM8	NUT,JAM,M8,ZINC PLATED
11	8	SSHCM6X16	SCREW, HEX M6X16
12	2	SSHCM8X30	SCREW,HEX CAP M8X40
13	6	SSSC05032	1/4-28 X 1/2, SOC CAP
14	4	SSSCM6X20	SCREW, SOCKET CAP
15	4	SSSSM6X12	M6 SET SCREW, 12MM L
16	4	UUAA102-6	BEARING,BRZ, 1.003ID 1.254OD .75L
17	12	WWFS1/4	WASHER,FLAT,SAE,1/4
18	12	WWL1/4	WASHER,LOCK,1/4

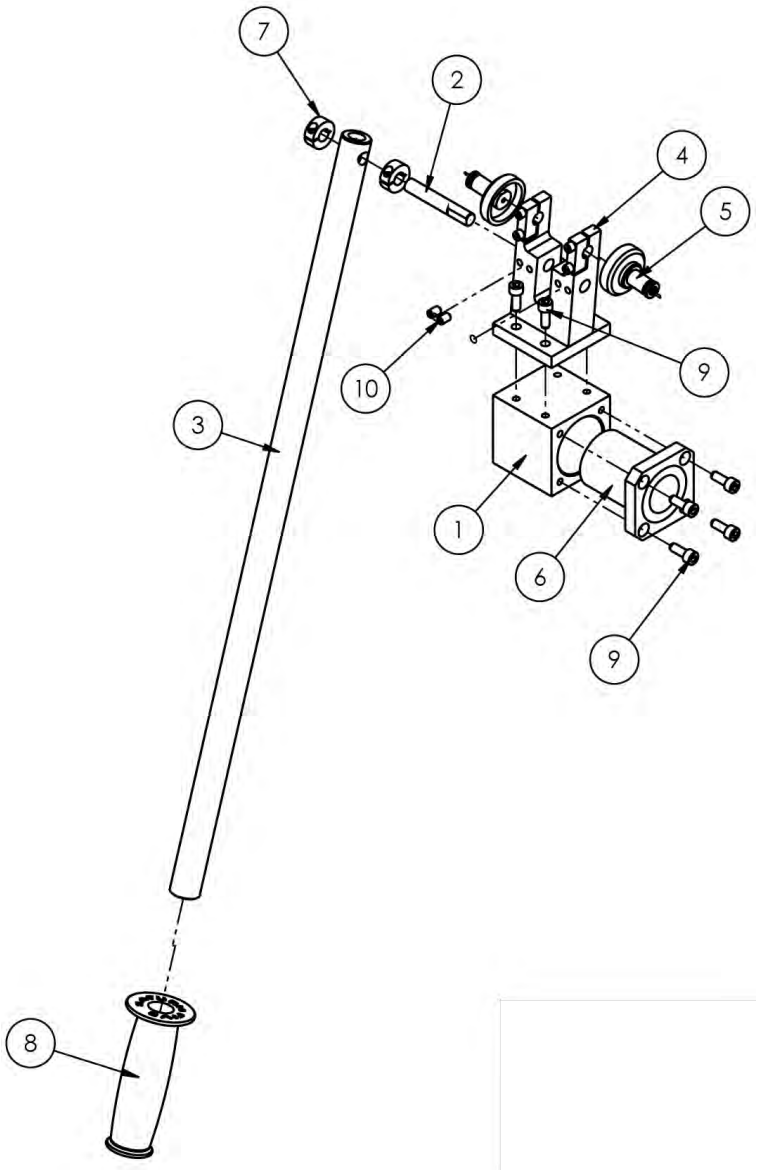

1389884 Slitters Sharpener Assembly

AAC Drawing Number 1389884 Rev 2

NO.	QTY	PART #	DESCRIPTION
1	1	1389883	BLOCK,SLIDE,SHARPENER
2	1	1389889	ROD,10MM X 63MM
3	1	1389890	TUBE,HANDLE,7/8X24
4	1	1389892	SHARPENER STONE HOLDER
5	2	1393003	SHARPENER STONE MT
6	1	BBSMK30GUU	BEARING,LIN,FLG,30MM
7	2	CCCLM10F	COLLAR,10MM CLAMP
8	1	PPP97045K57	GRIP,RIBBED VINYL
9	8	SSSCM6X16	M6X16 SOC CAP SCREW
10	2	SSSSM6X10	M6 SET SCREW, 10MM L

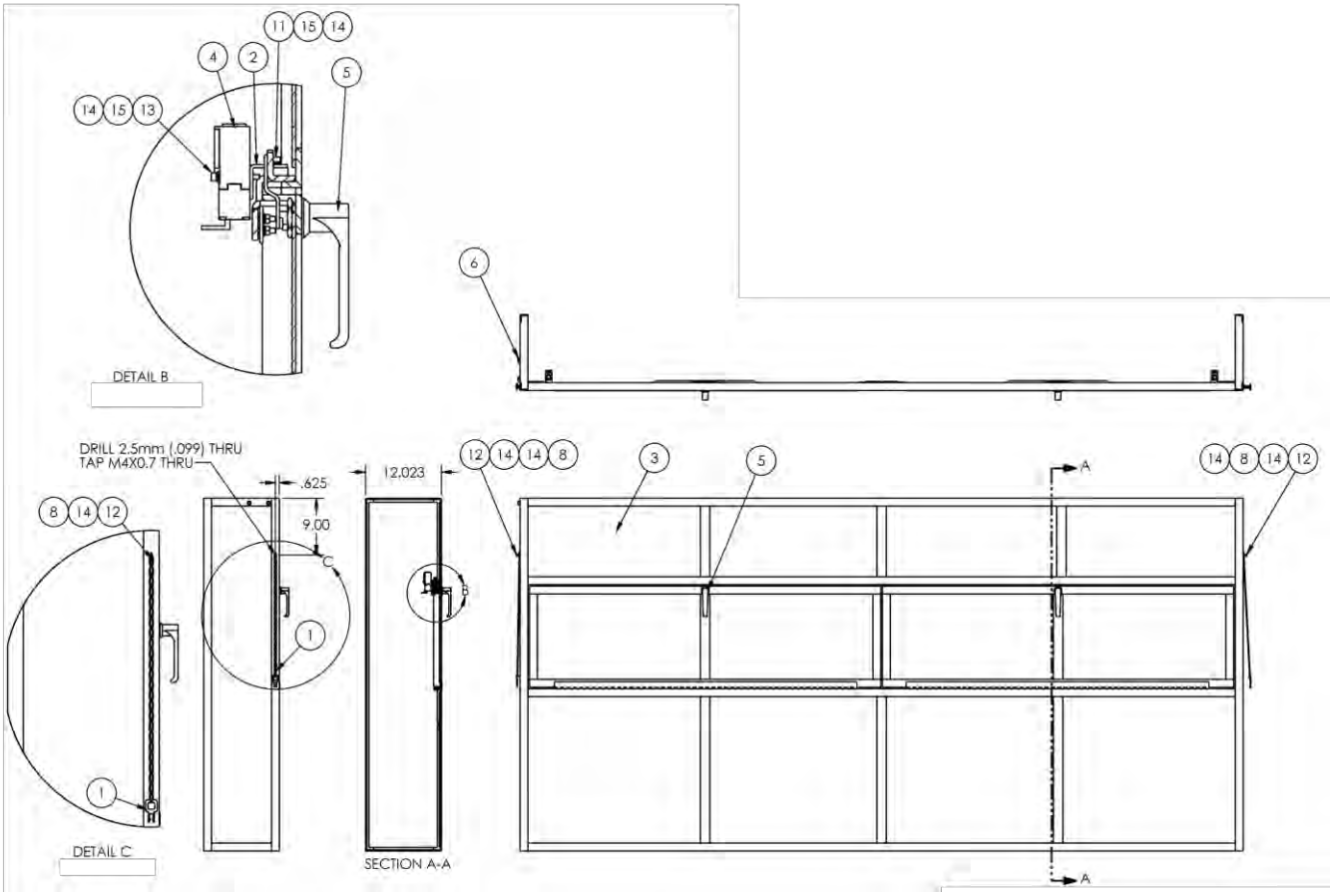

1393160 Rear Guard

AAC Drawing Number 1393160 Rev 8

NO.	QTY	PART #	DESCRIPTION
1	2	1388683	SAFETY SWITCH KEY ASM
2	2	1389632	LOCKOUT BKT, FRAME
3	1	1393899	REAR,GUARD
4	2	MM65665K32	SWITCH,SAFETY,DOOR
5	2	MMELH149	LATCH HANDLE
6	2	NNH3/8-16	NUT,HEX,3/8-16
7	4	NNHM4X0.7	NUT,HEX,M4-0.7
8	2	NNJM4	NUT,JAM,M4,ZINC PLATED
9	24	SSFC90024	8-32 X 3/8 FL ALN CAP
10	4	SSPSM4X16	M4-0.70X16 PAN HS SLOTTED
11	4	SSSCM4X10	SCREW,SOC CAP,M4-0.7X8
12	2	SSSCM4X16	SCREW,SOCKET CAP
13	4	SSSCM4X35	SCREW,SOC CAP,M4-0.7X30
14	20	WWFM4.3	WASHER, FLAT, M4
15	12	WWL8	WASHER,LOCK,#8

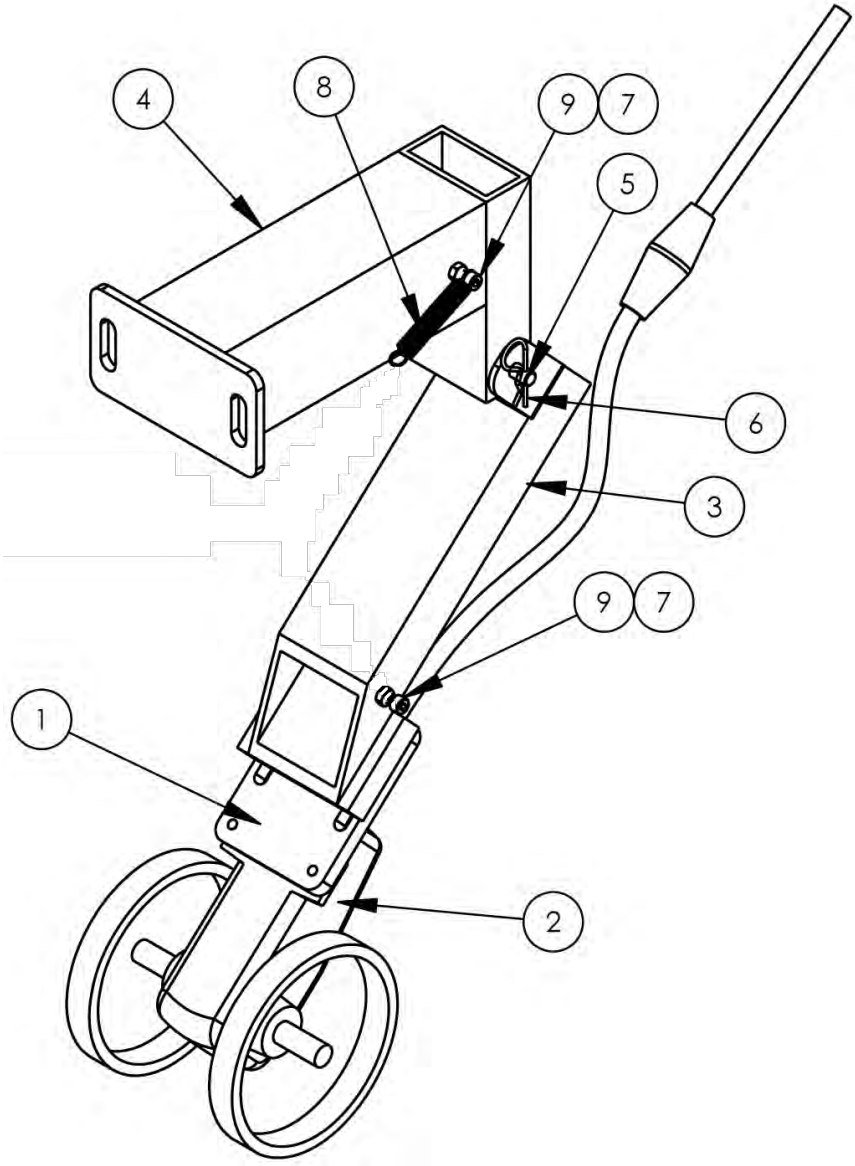

1393676 Encoder Assembly

AAC Drawing Number 1393676 Rev 4

NO.	QTY	PART #	DESCRIPTION
1	1	1388420	PLATE, ENCODER MOUNT
2	1	1389794	CABLE, ENCODER, ASSEMBLY
3	1	1393668	COUNTER ARM, MOVING
4	1	1393670	BRACKET, STAND-OFF WELD
5	1	1393675	PIVOT PIN ASSEMBLY
6	1	MM98335A04	SPRING CLIP, .06 WIRE
7	2	NNHM4X0.7	NUT,HEX,M4-0.7
8	1	RRLE030CD7	SPRING,EXT,.030X.31X2.0
9	2	SSSCM4X16	SCREW,SOCKET CAP

Page 64

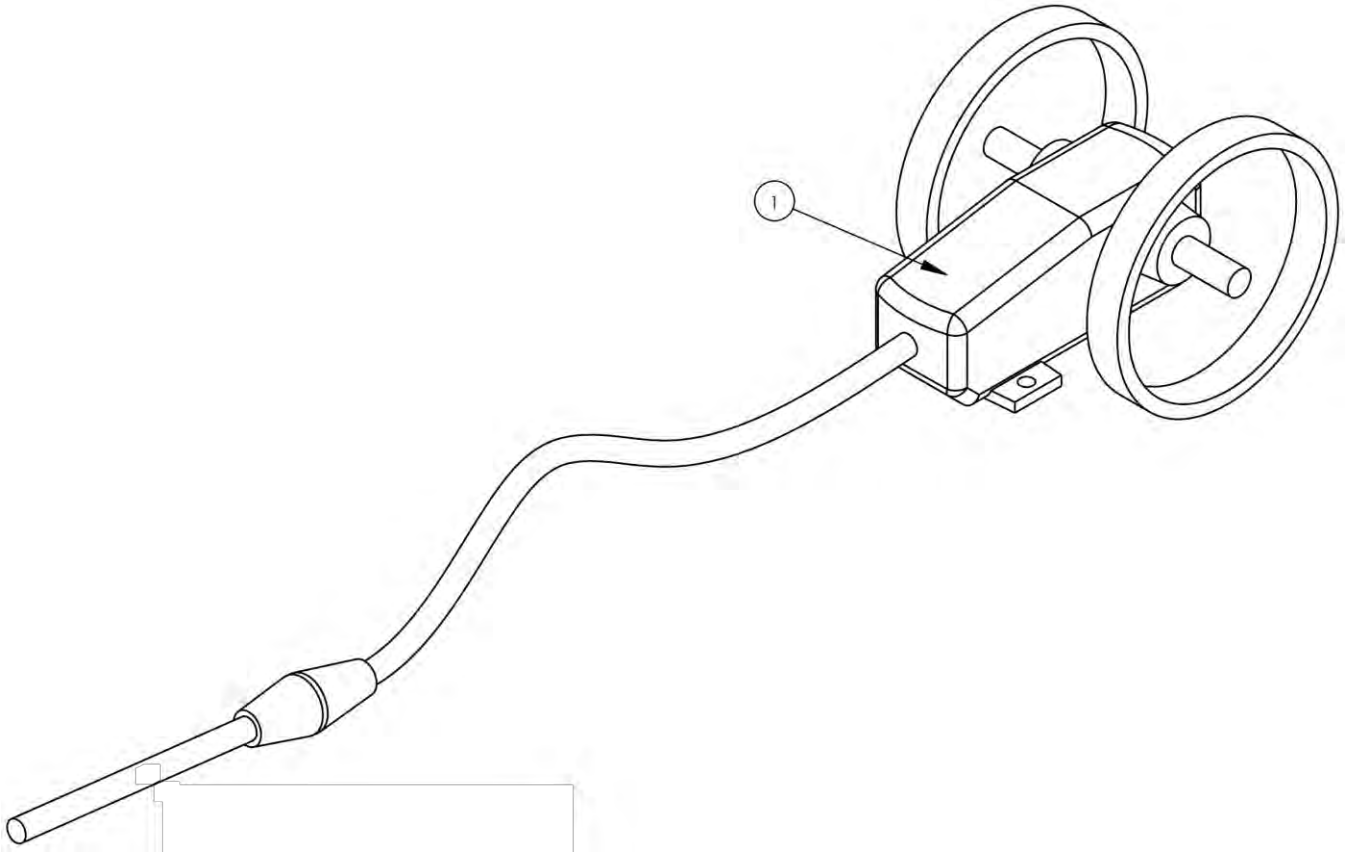

1389794 Encoder Cable Assembly

AAC Drawing Number 1389794 Rev 0

NO.	QTY	PART #	DESCRIPTION
1	1	PL-D3M	ENCODER
2	1	1389794 (125627B)	WIRING DIAGRAM

1393EBSA-PD Pneumatic Diagram

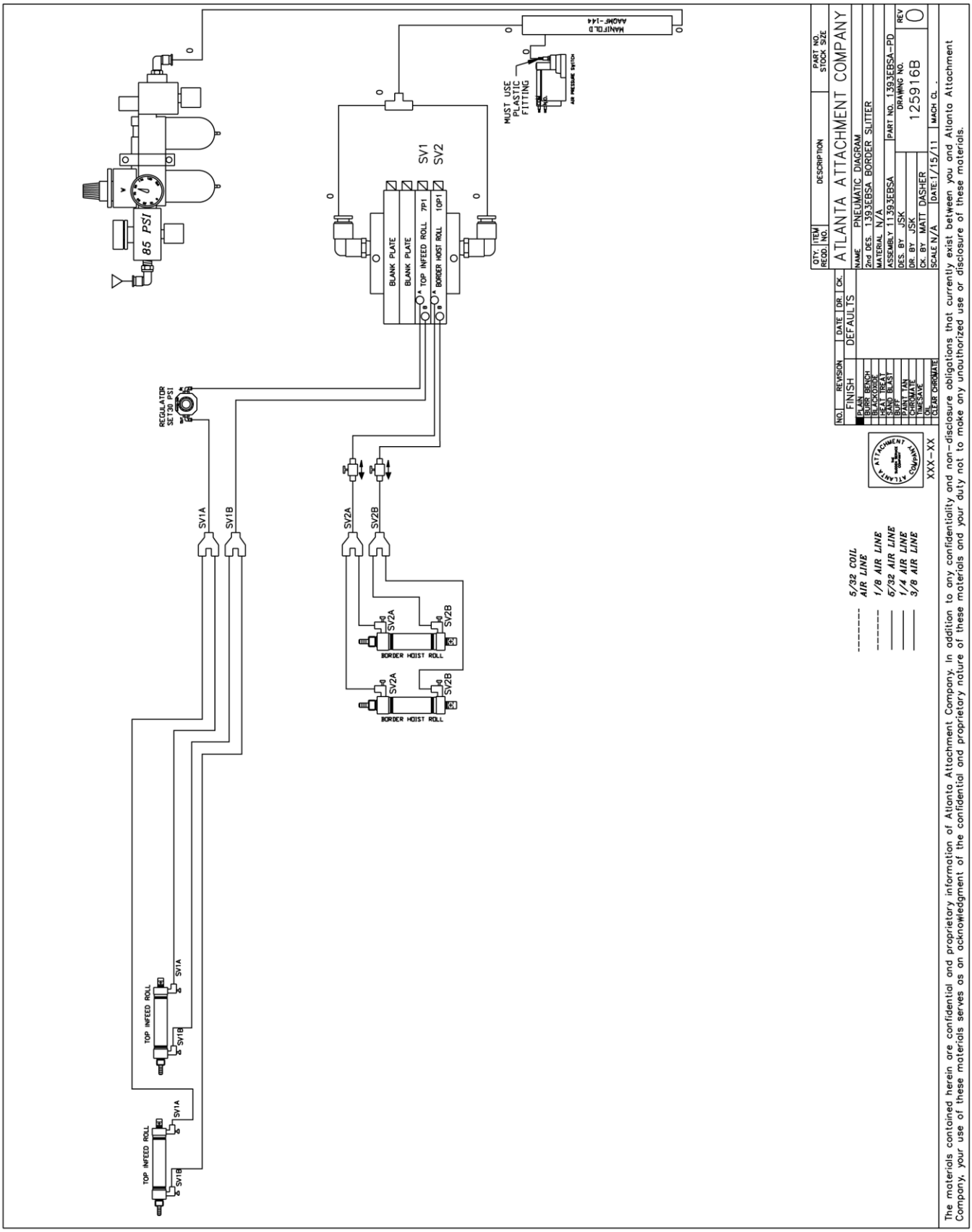

1393EBSA-WD1 Wiring Diagram

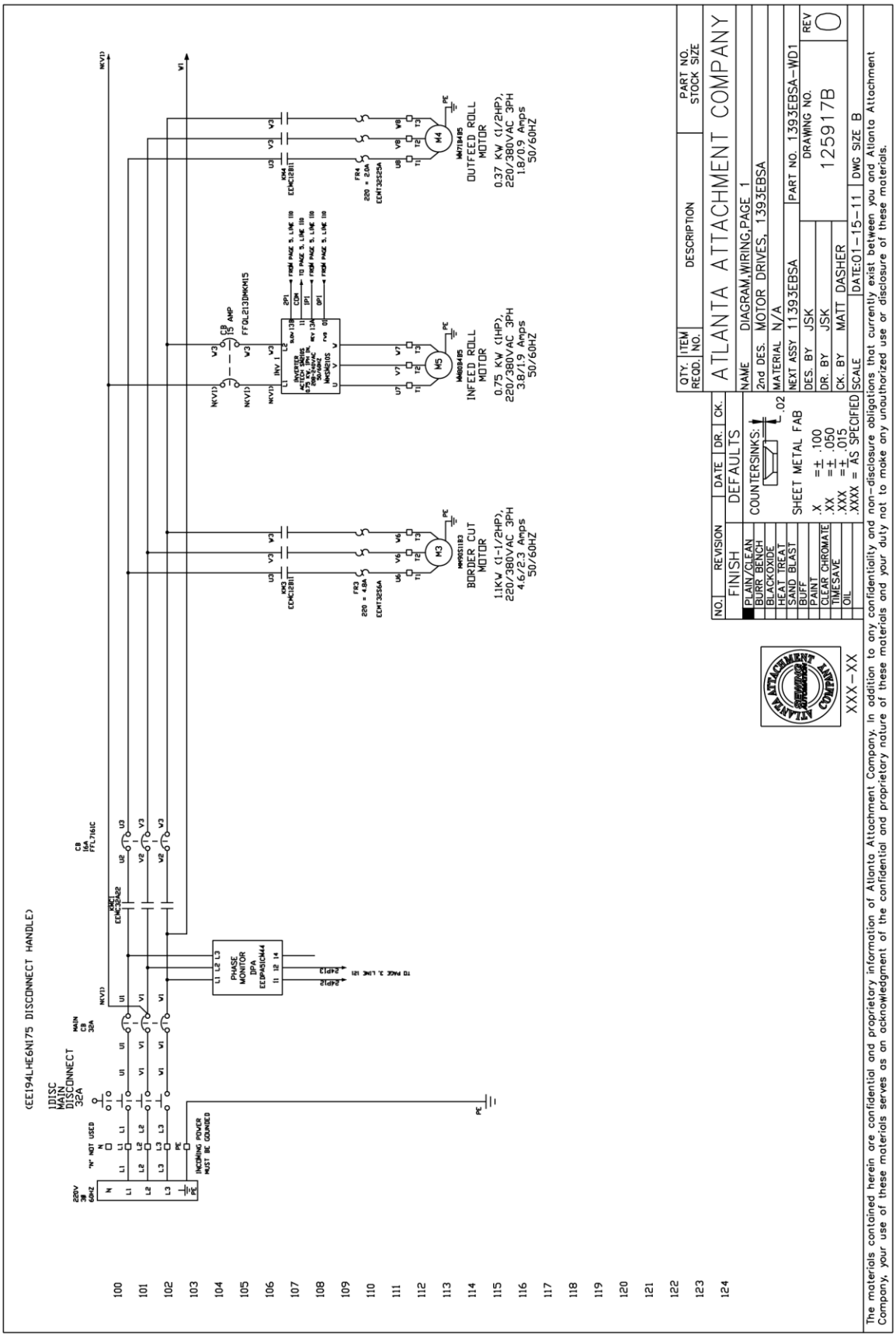

1393EBSA-WD2 Wiring Diagram

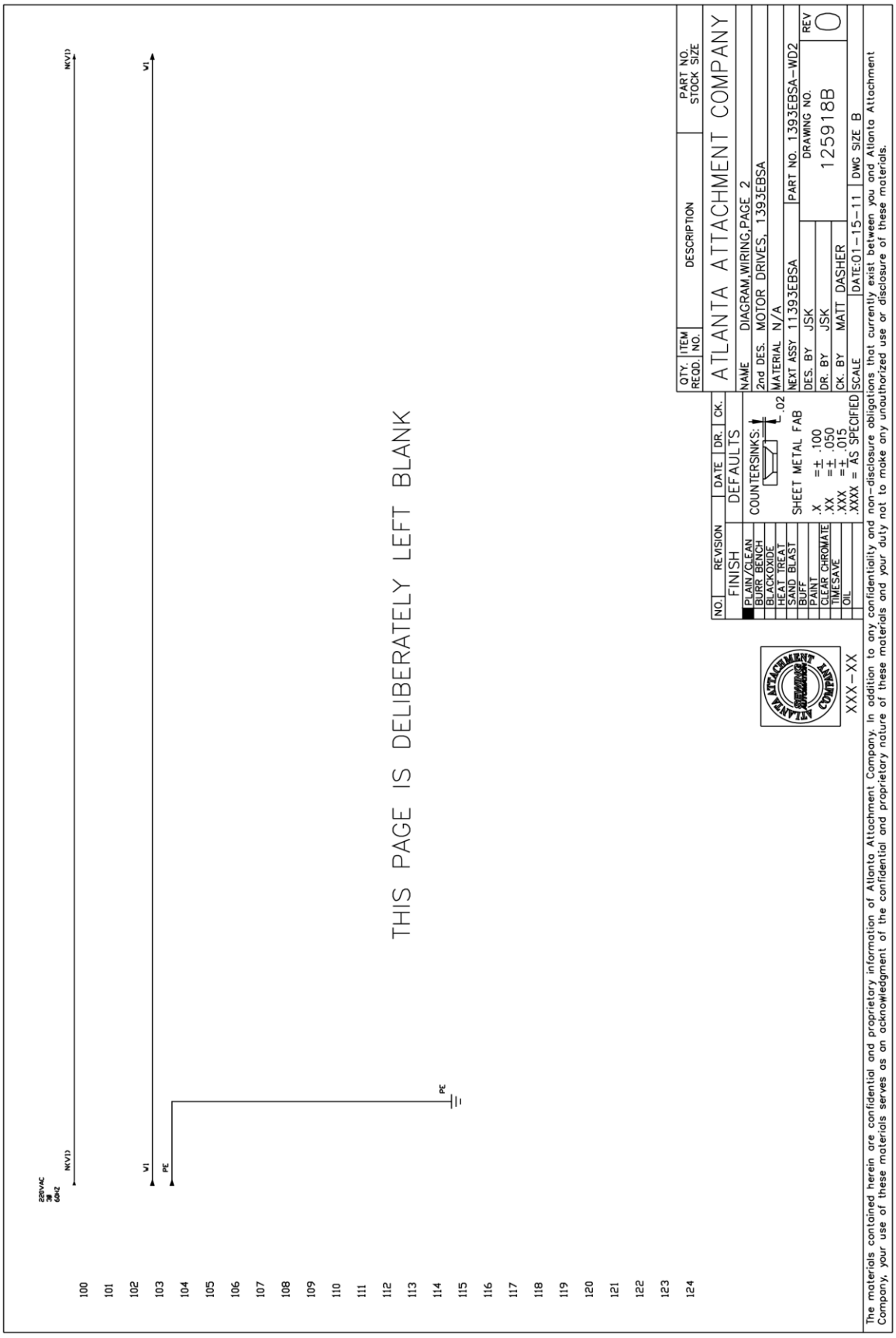

1393EBSA-WD3 Wiring Diagram

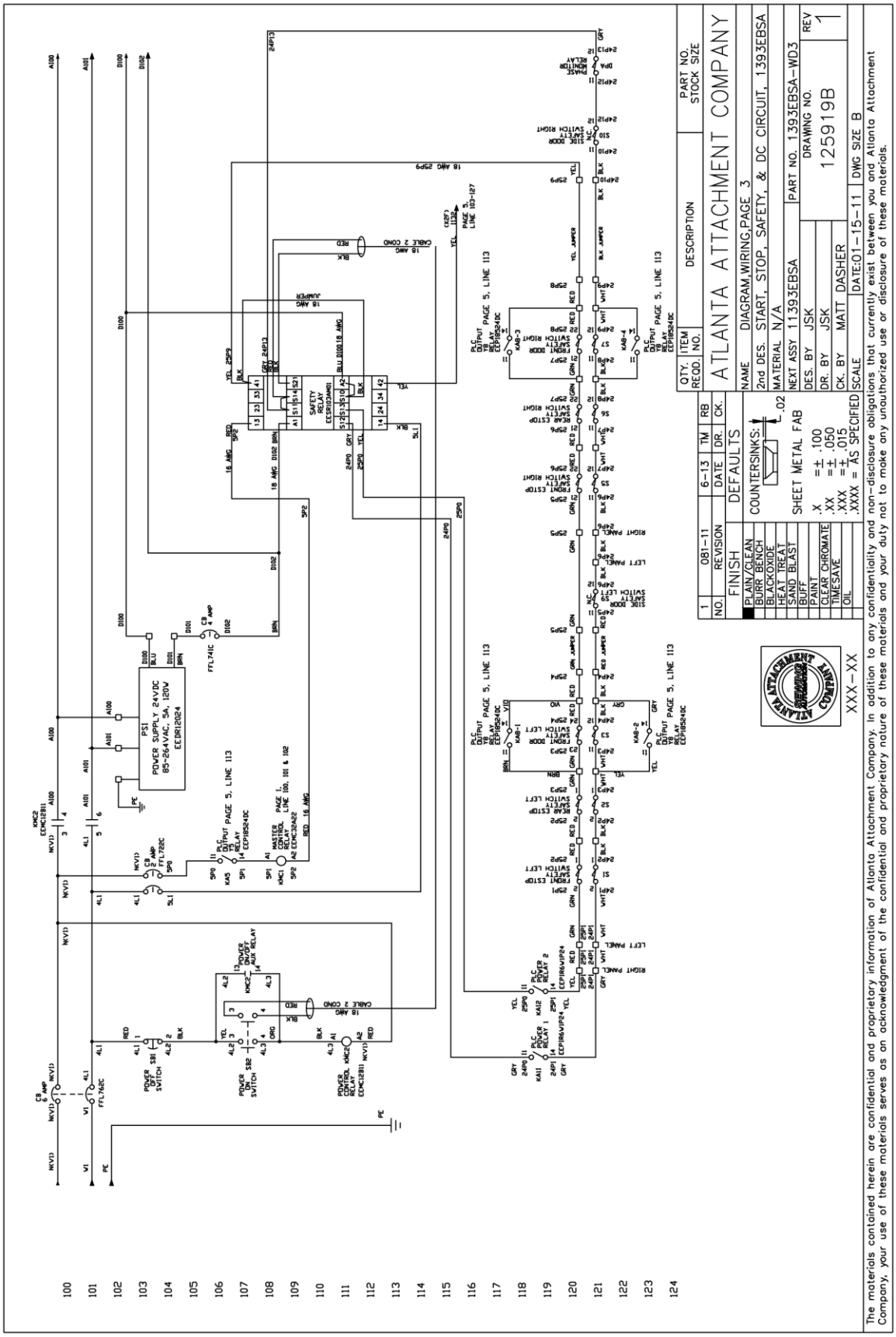

1393EBSA-WD4 Wiring Diagram

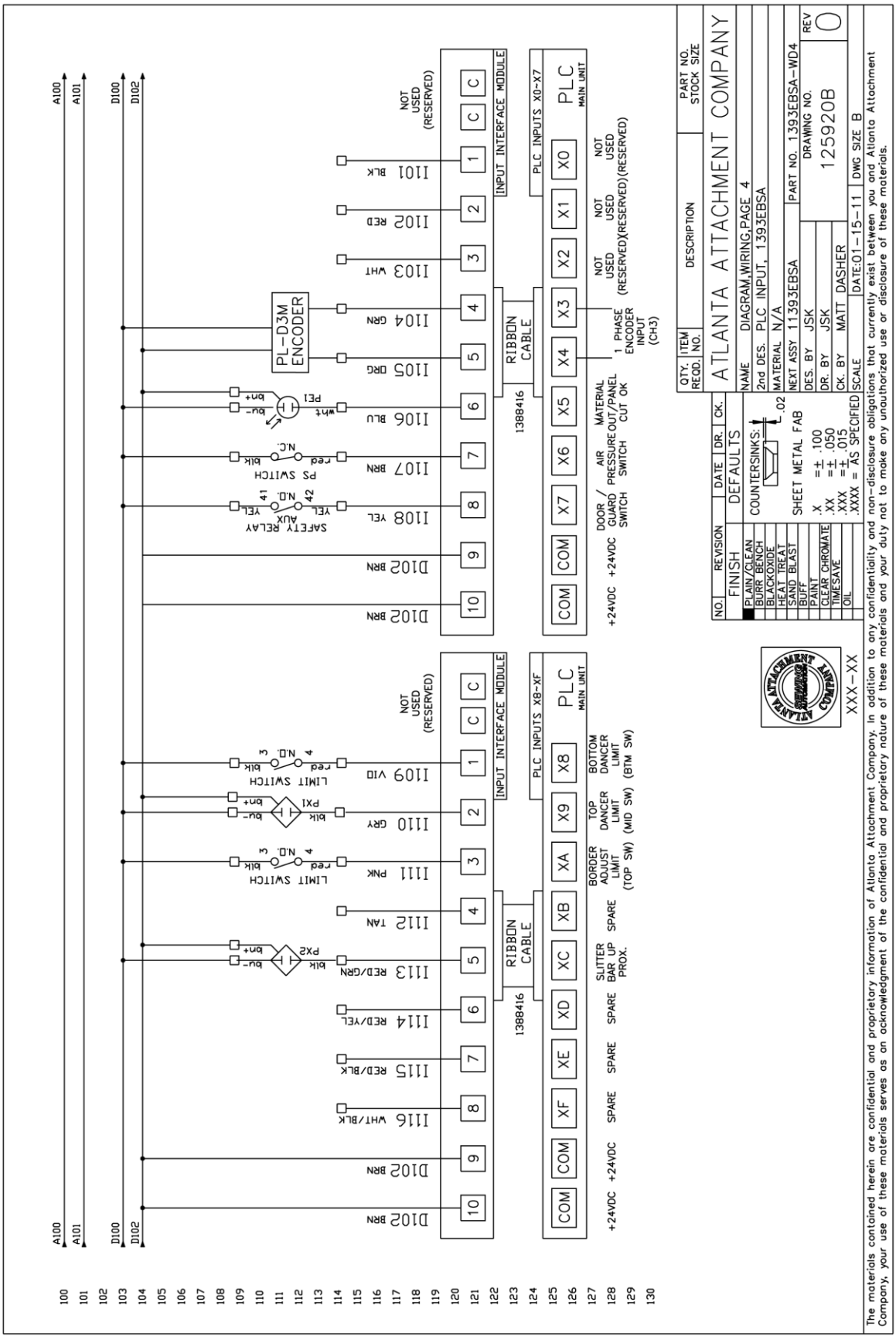

1393EBSA-WD5 Wiring Diagram

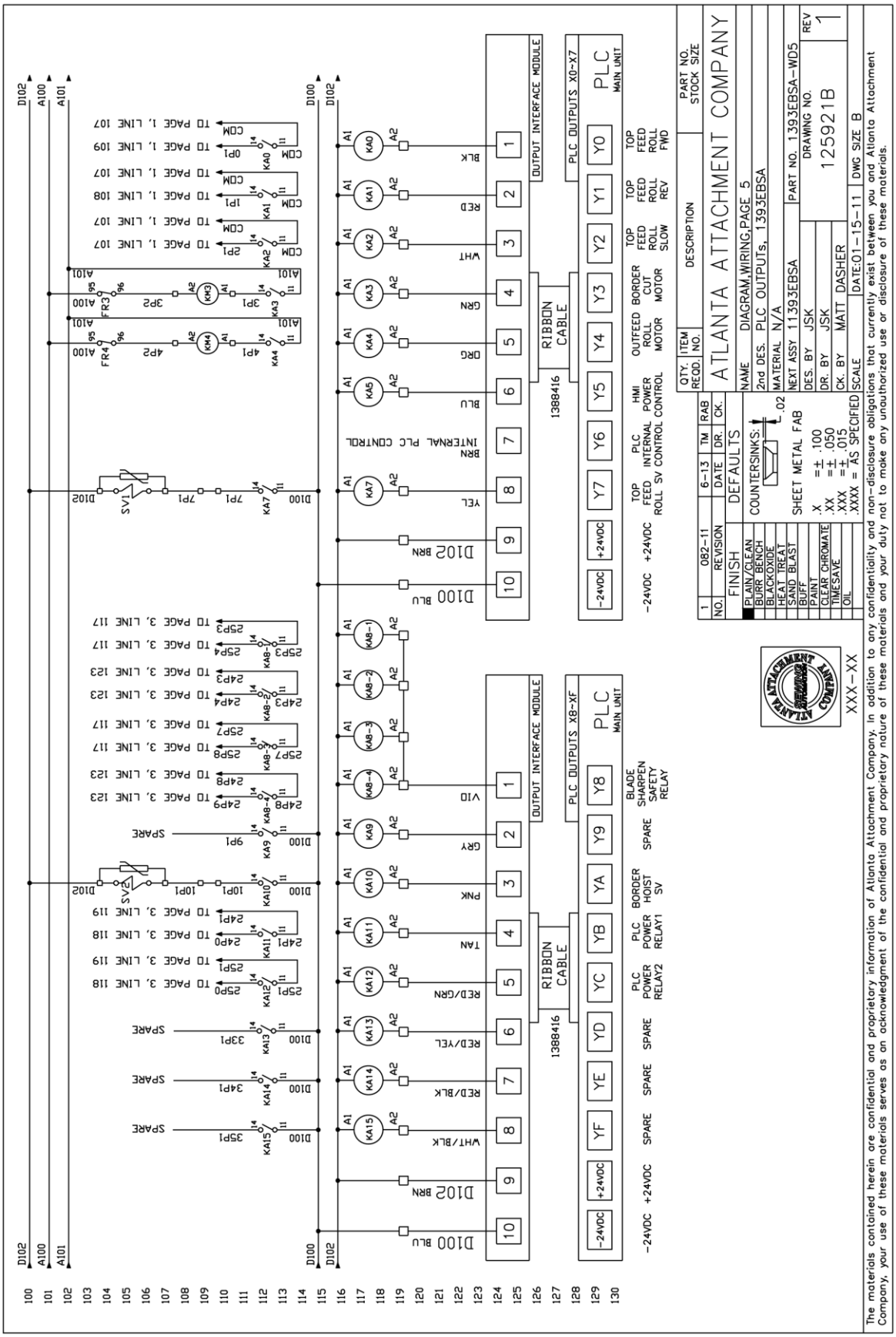

1393EBSA-WD6 Wiring Diagram

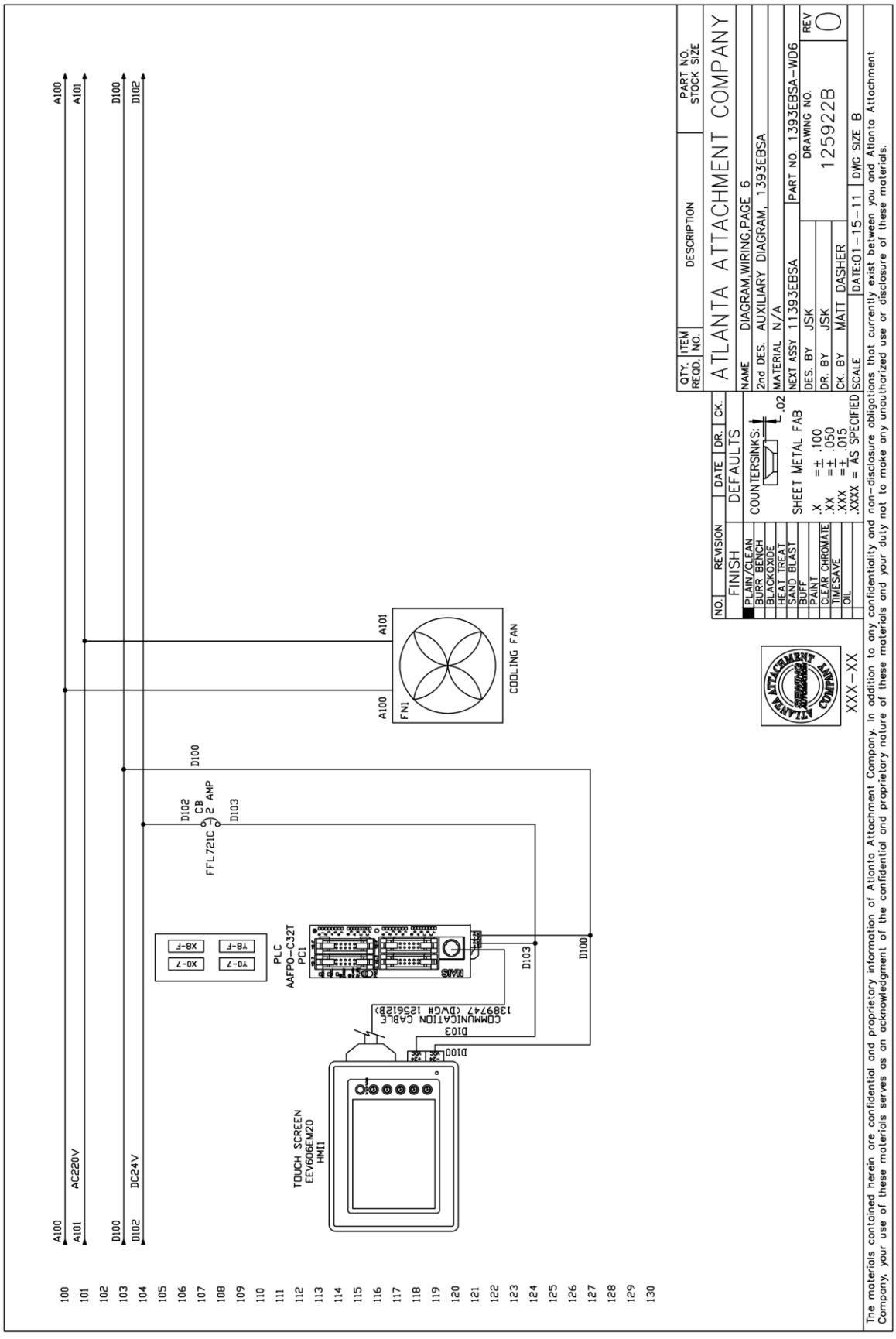

1393EBSA-WD7 Wiring Diagram

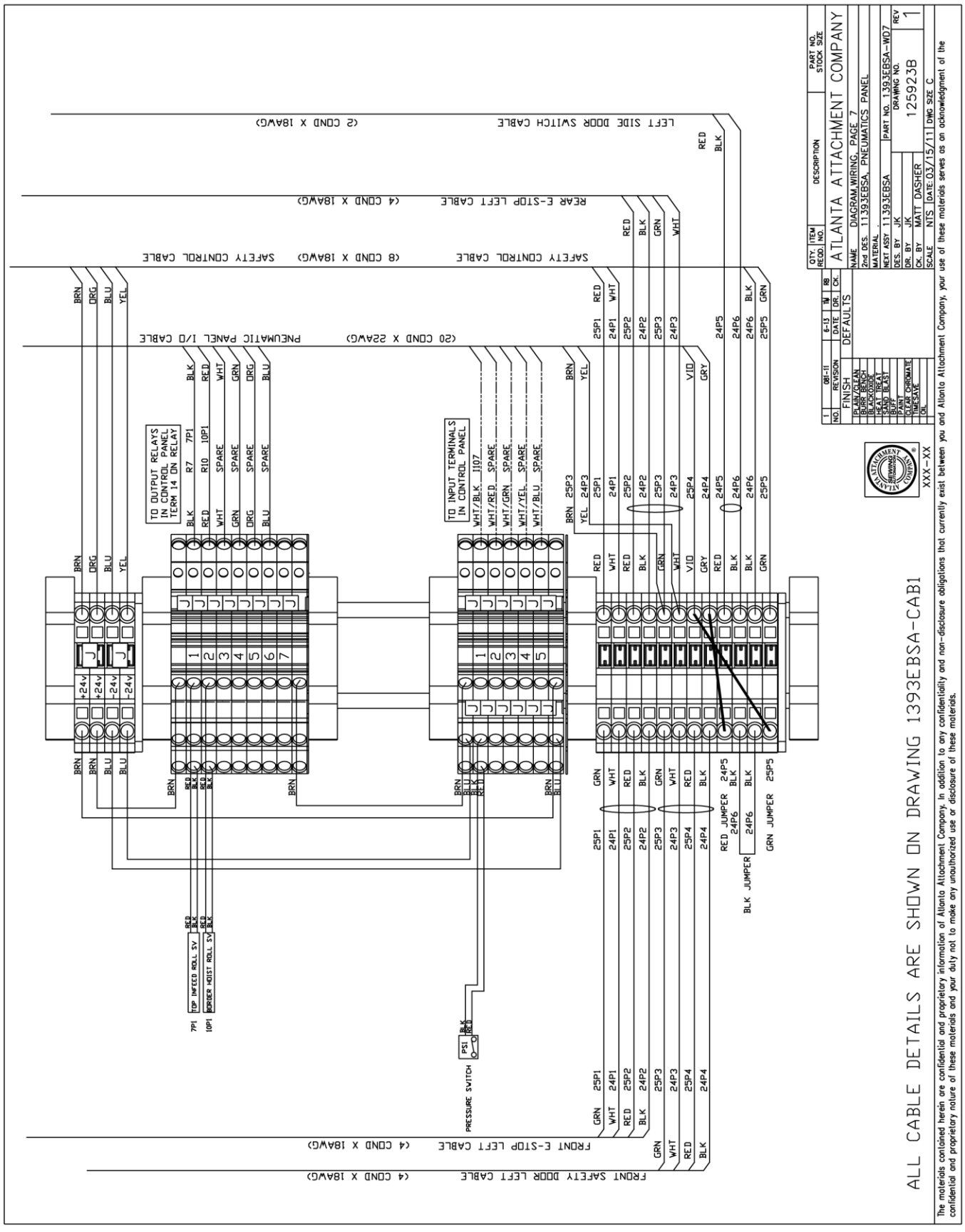

1393EBSA-WD8 Wiring Diagram 1 of 12

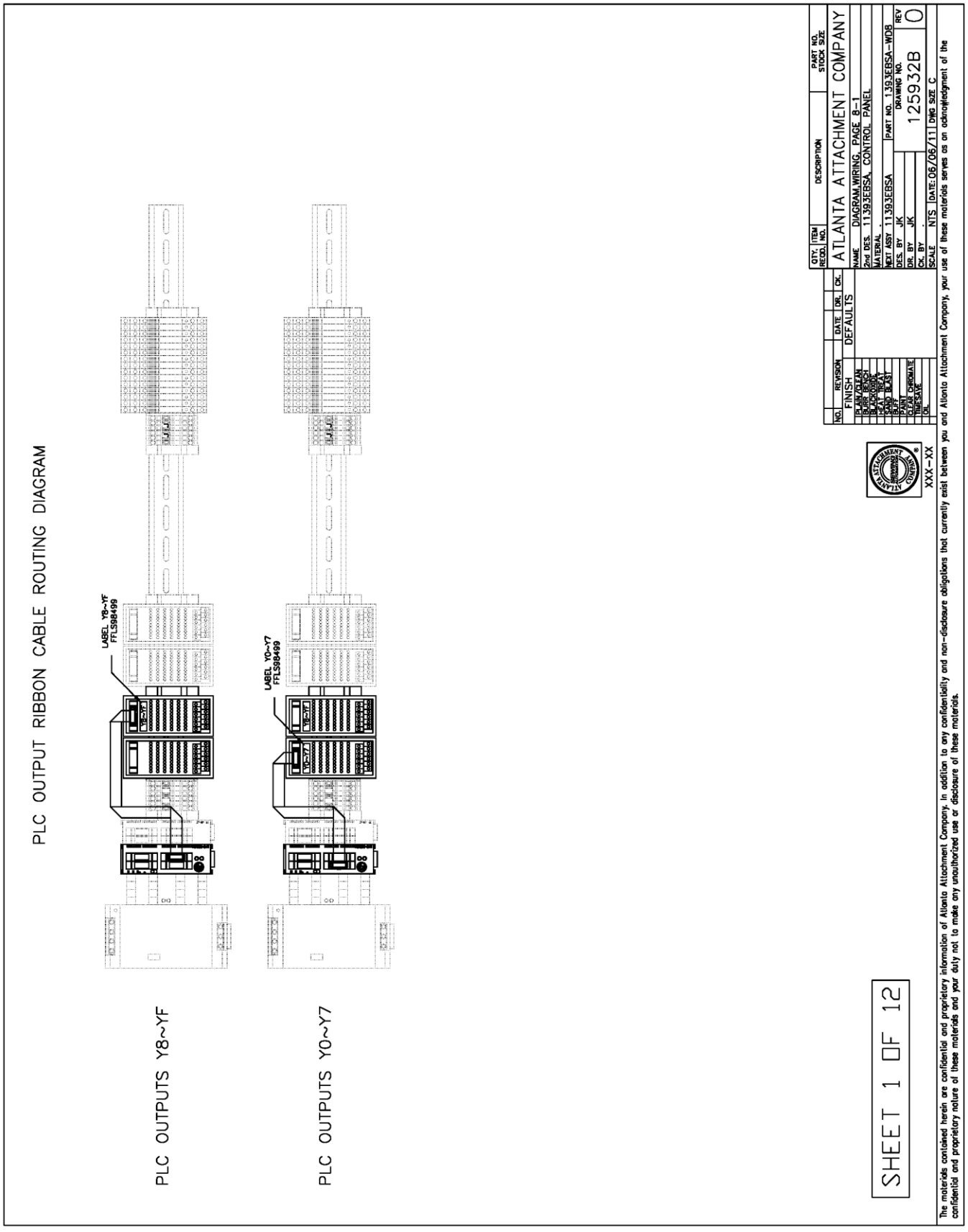

1393EBSA-WD8 Wiring Diagram 2 of 12

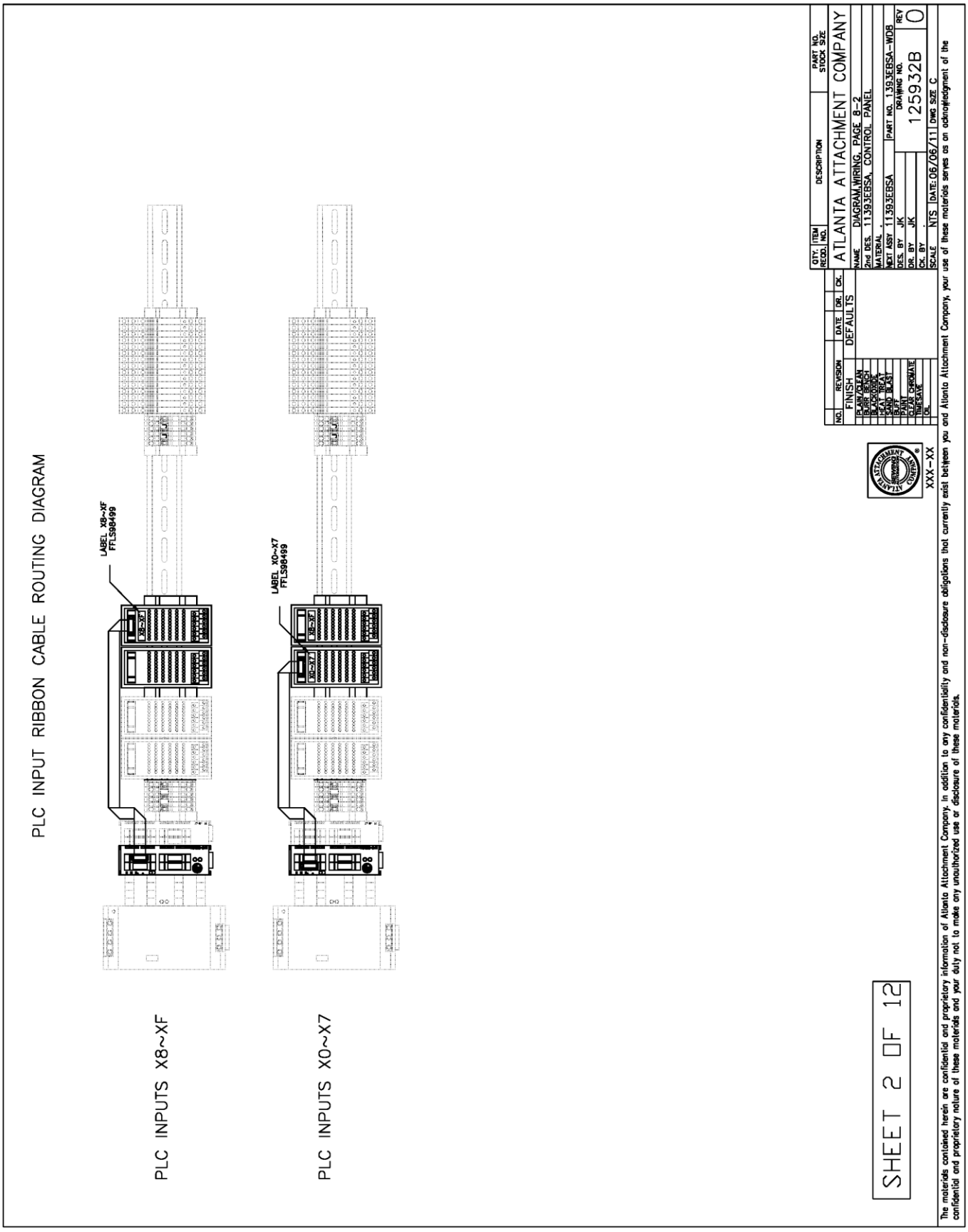

1393EBSA-WD8 Wiring Diagram 3 of 12

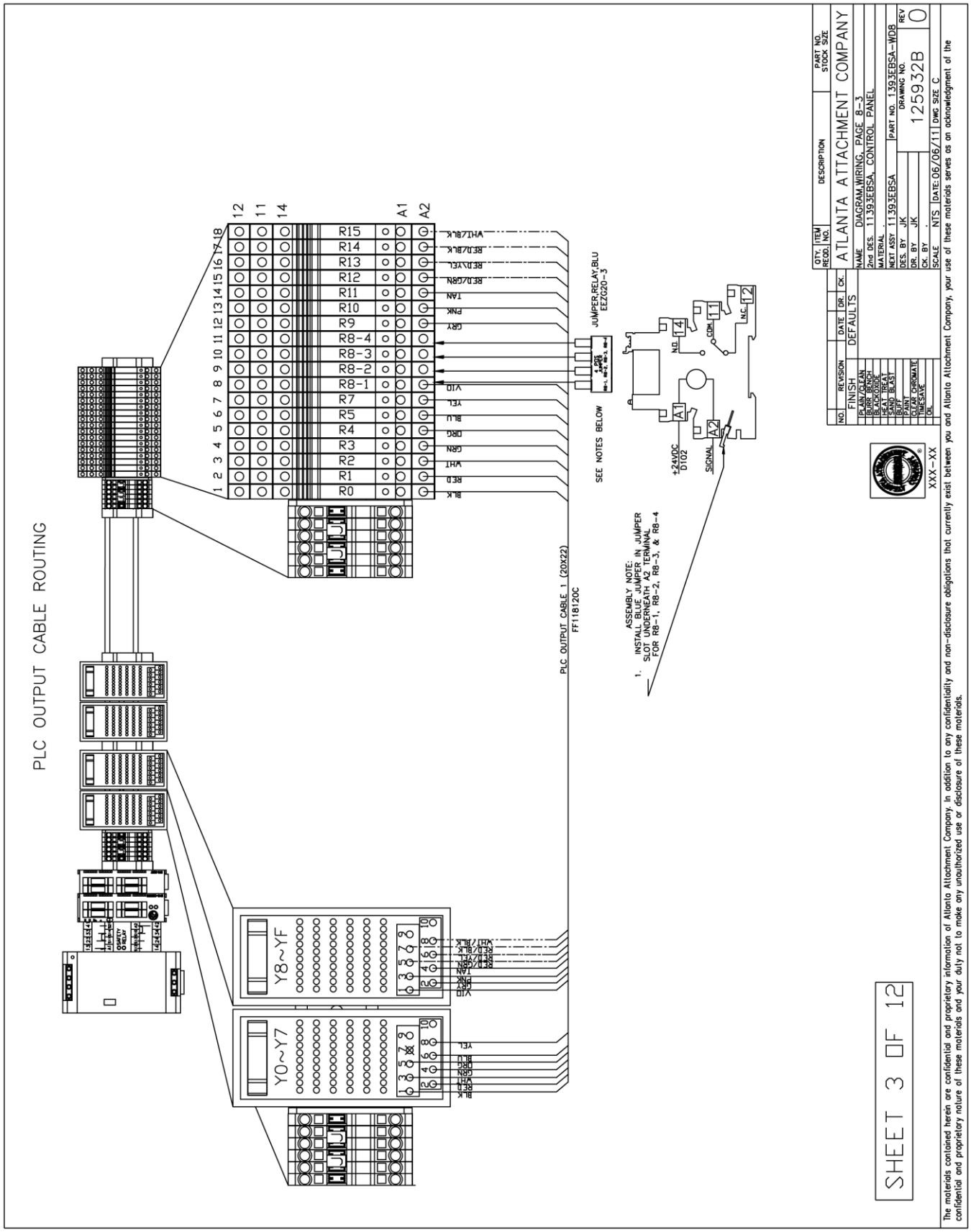

1393EBSA-WD8 Wiring Diagram 4 of 12

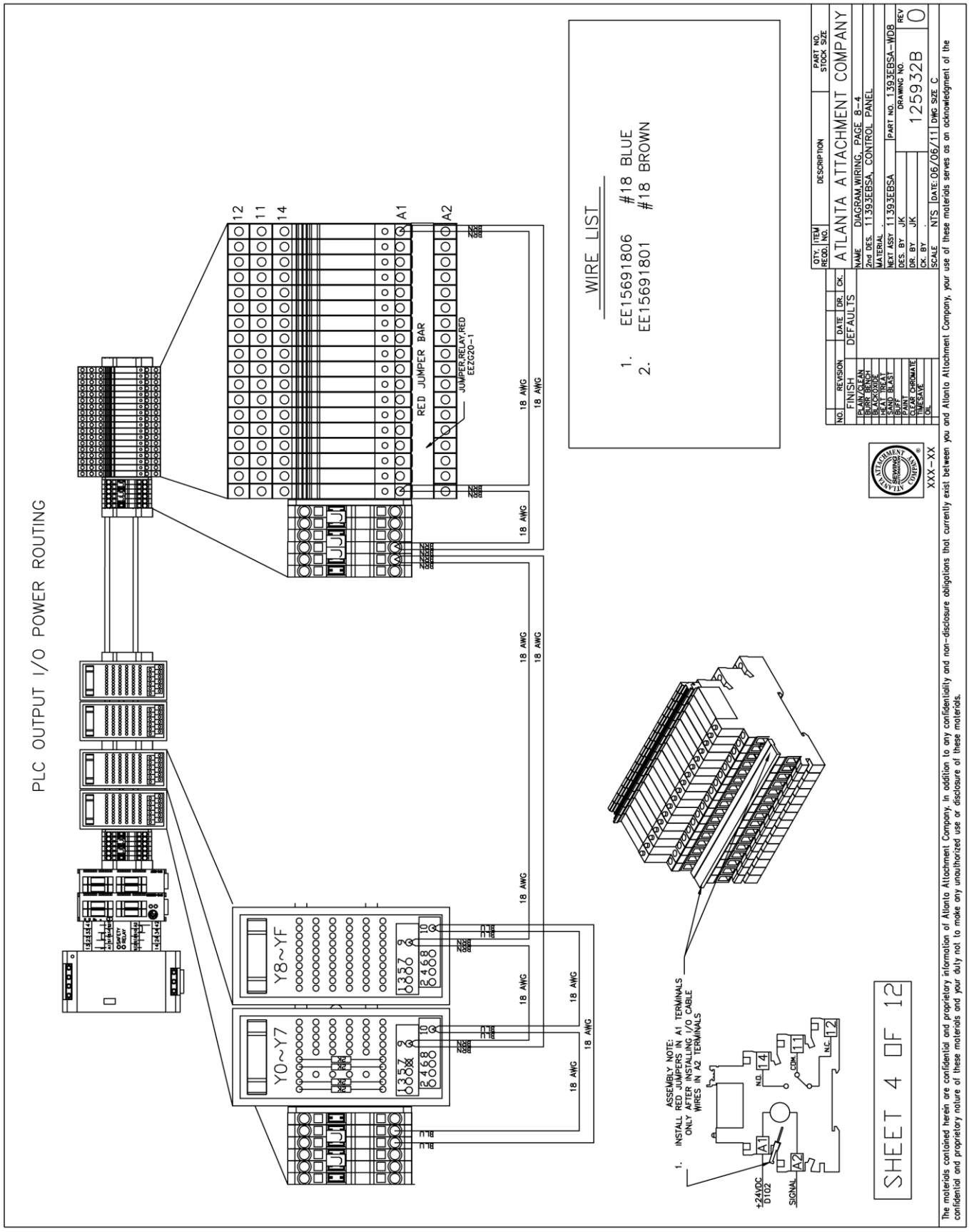

1393EBSA-WD8 Wiring Diagram 5 of 12

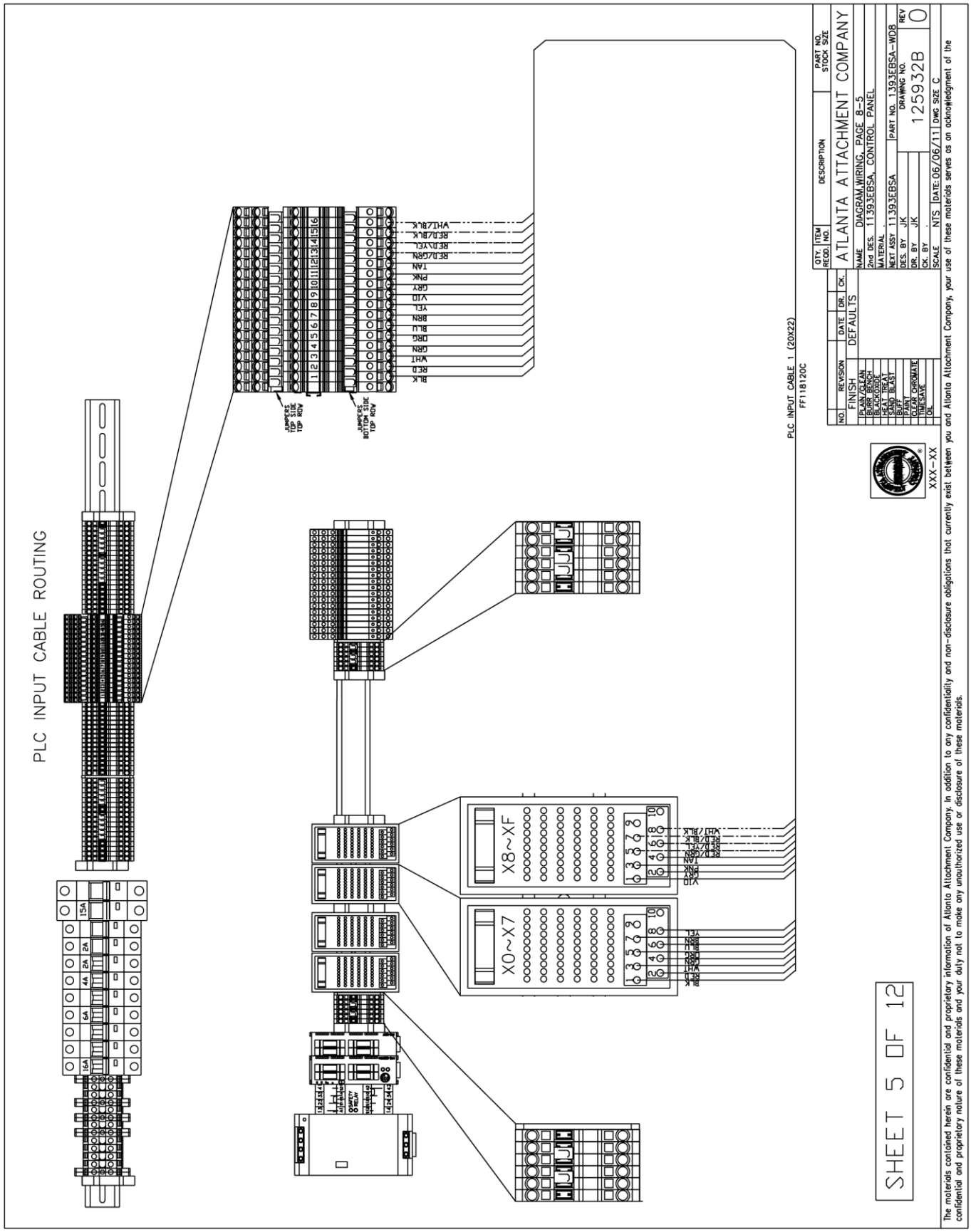

1393EBSA-WD8 Wiring Diagram 6 of 12

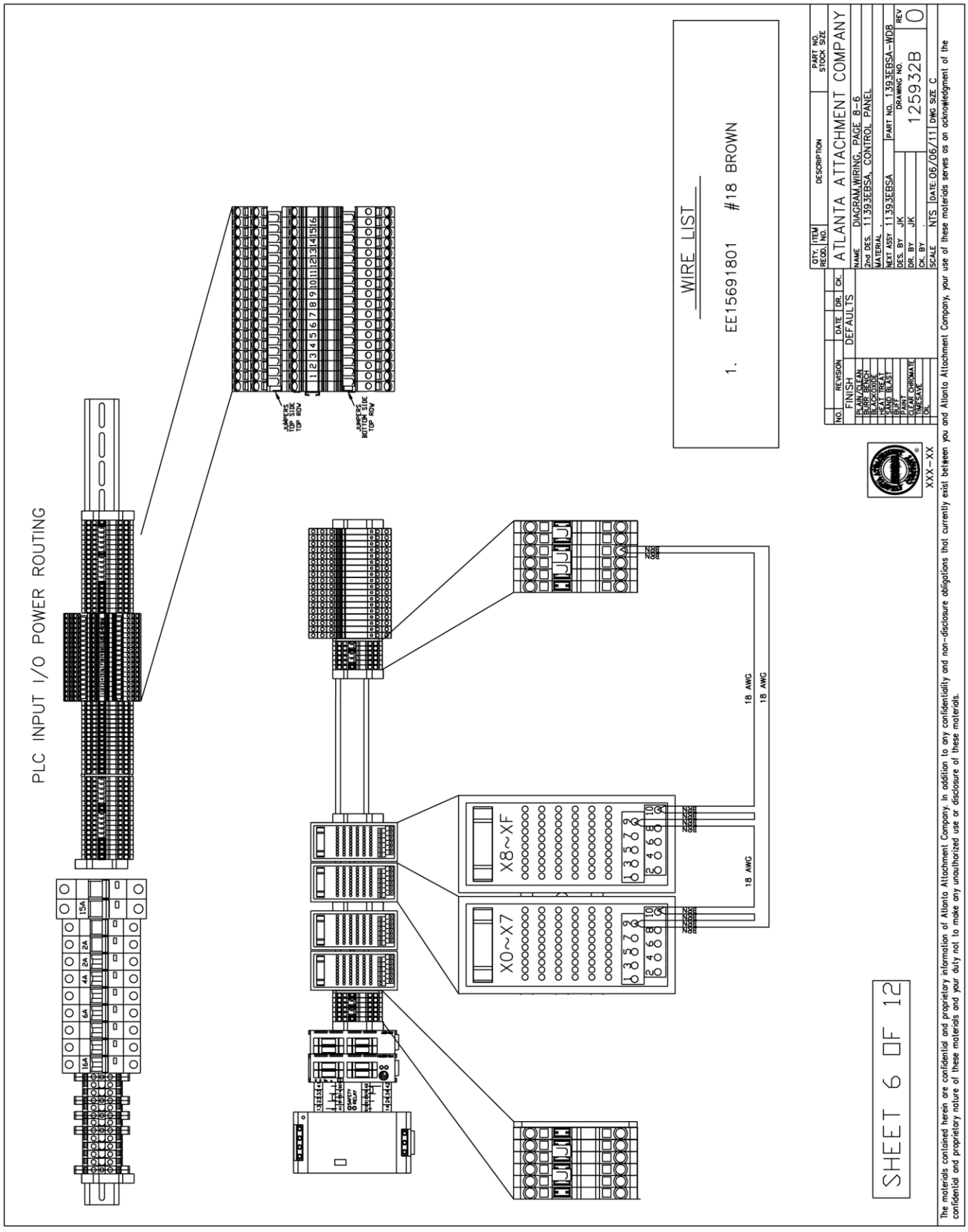

1393EBSA-WD8 Wiring Diagram 7 of 12

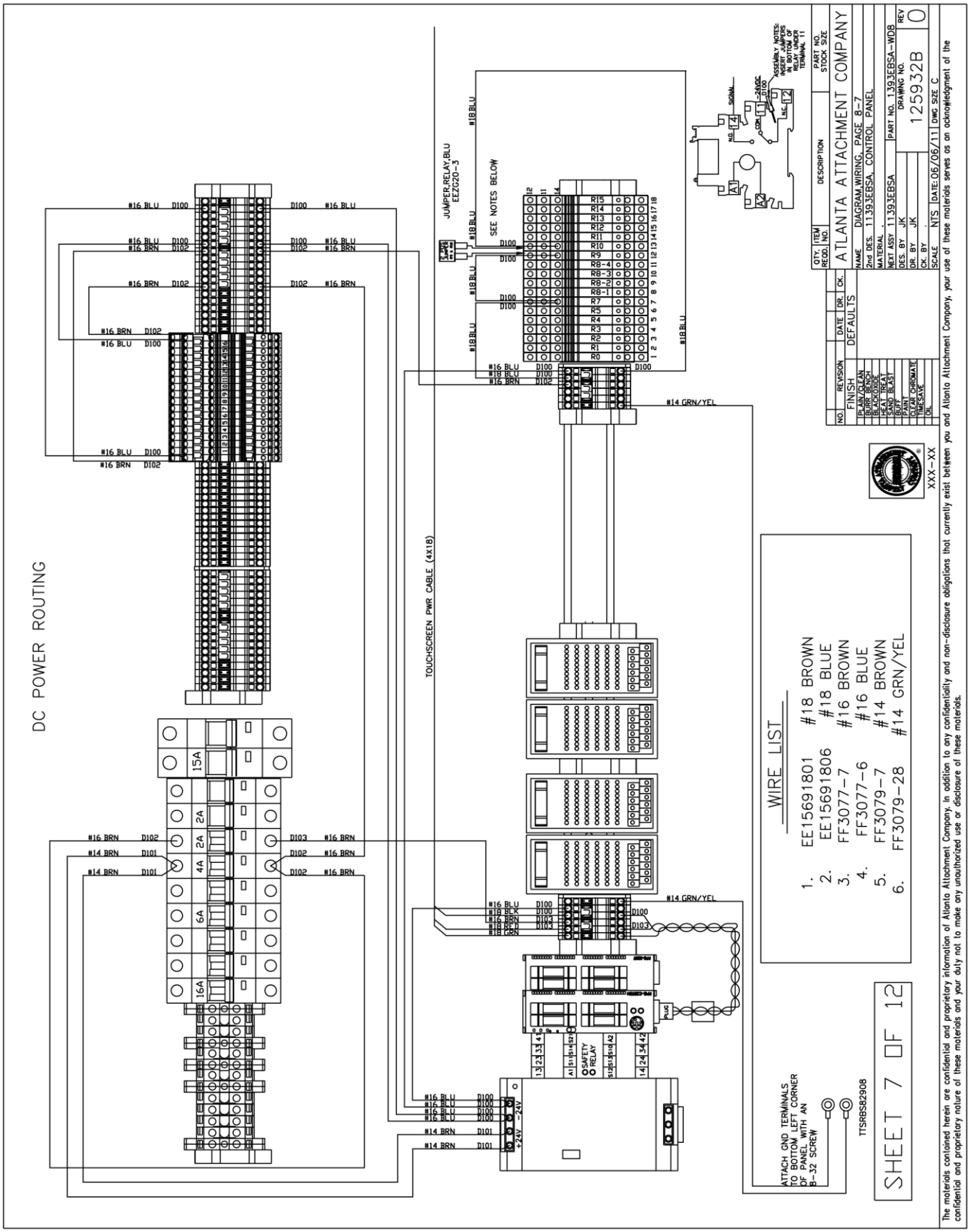

1393EBSA-WD8 Wiring Diagram 8 of 12

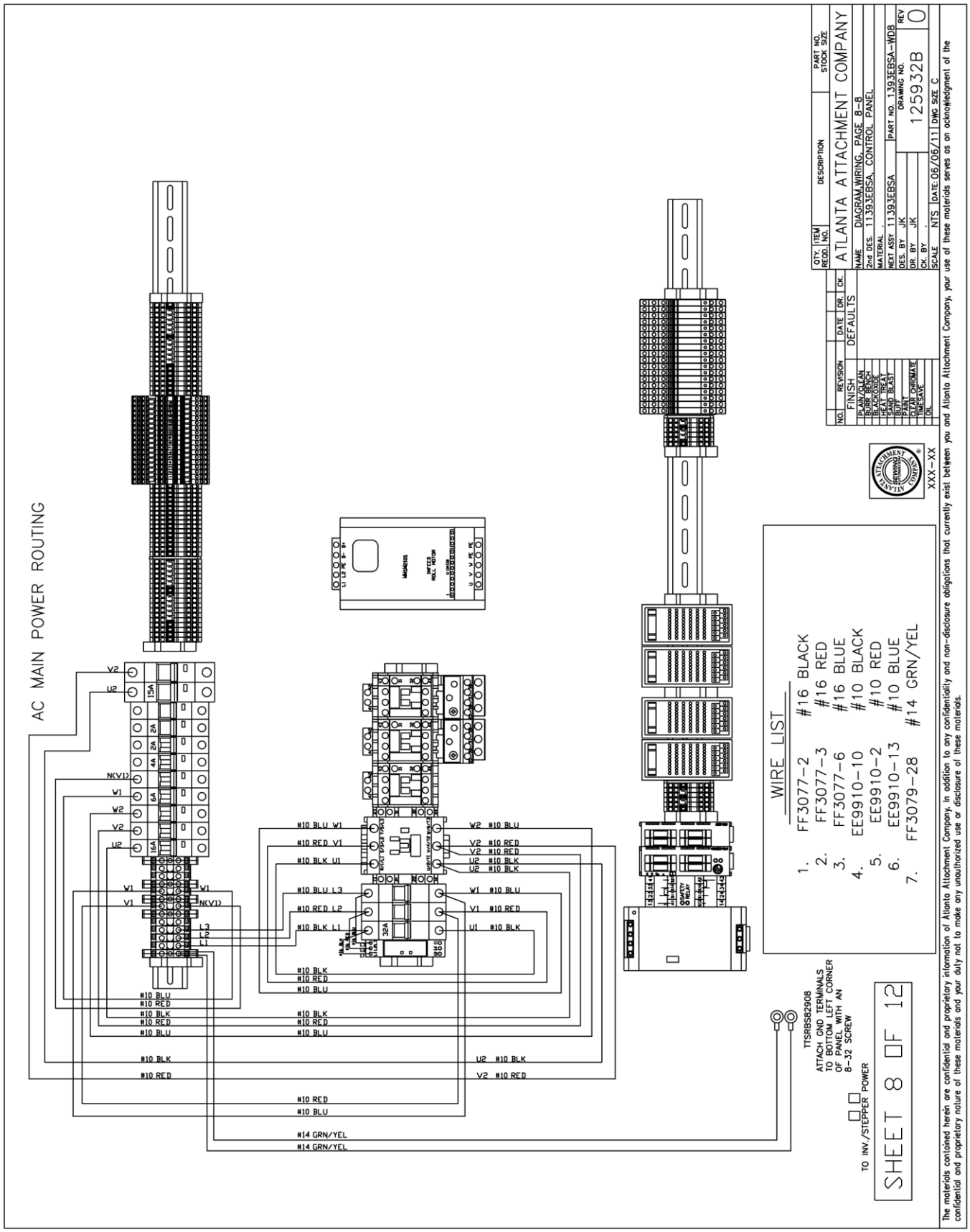

1393EBSA-WD8 Wiring Diagram 9 of 12

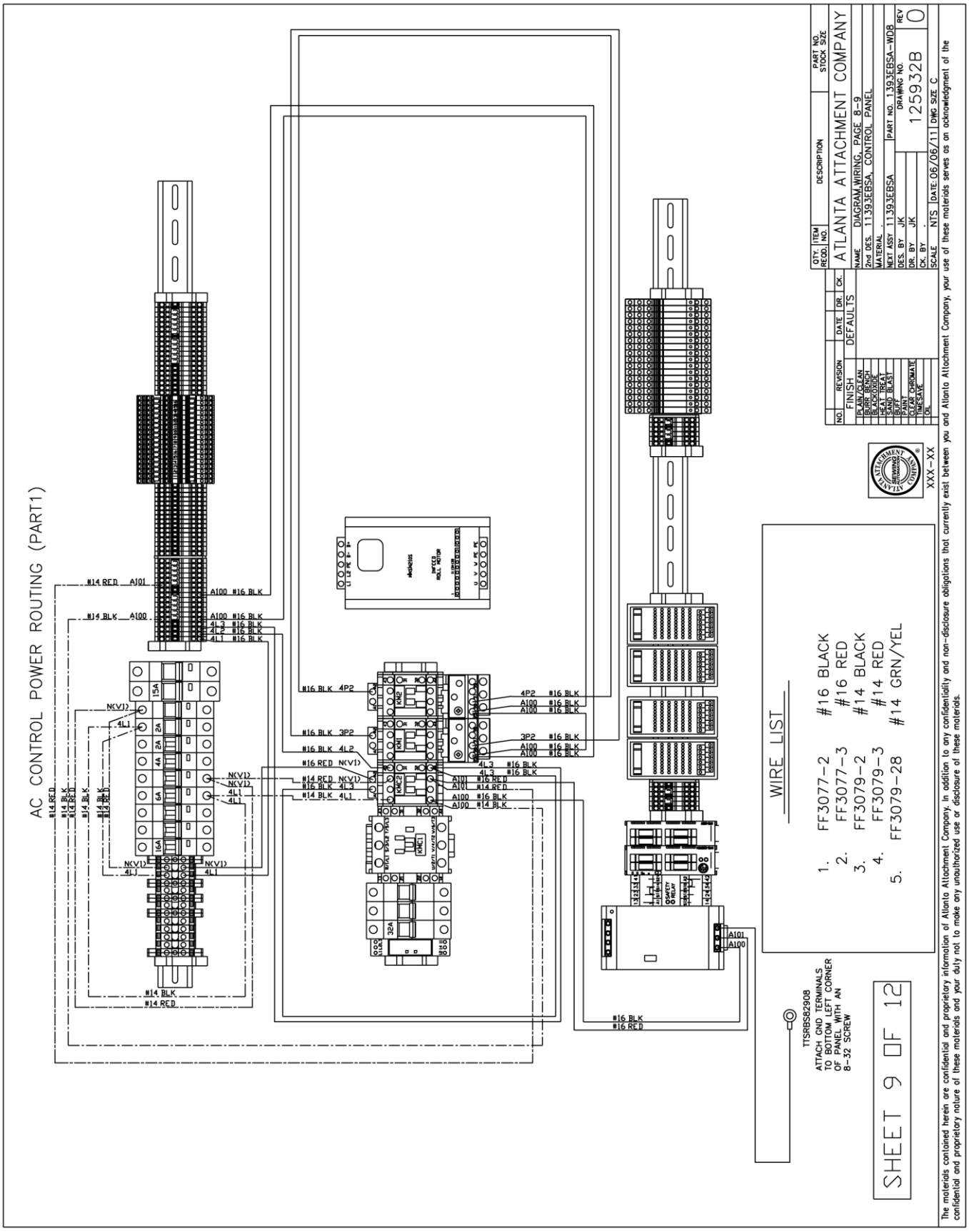

1393EBSA-WD8 Wiring Diagram 10 of 12

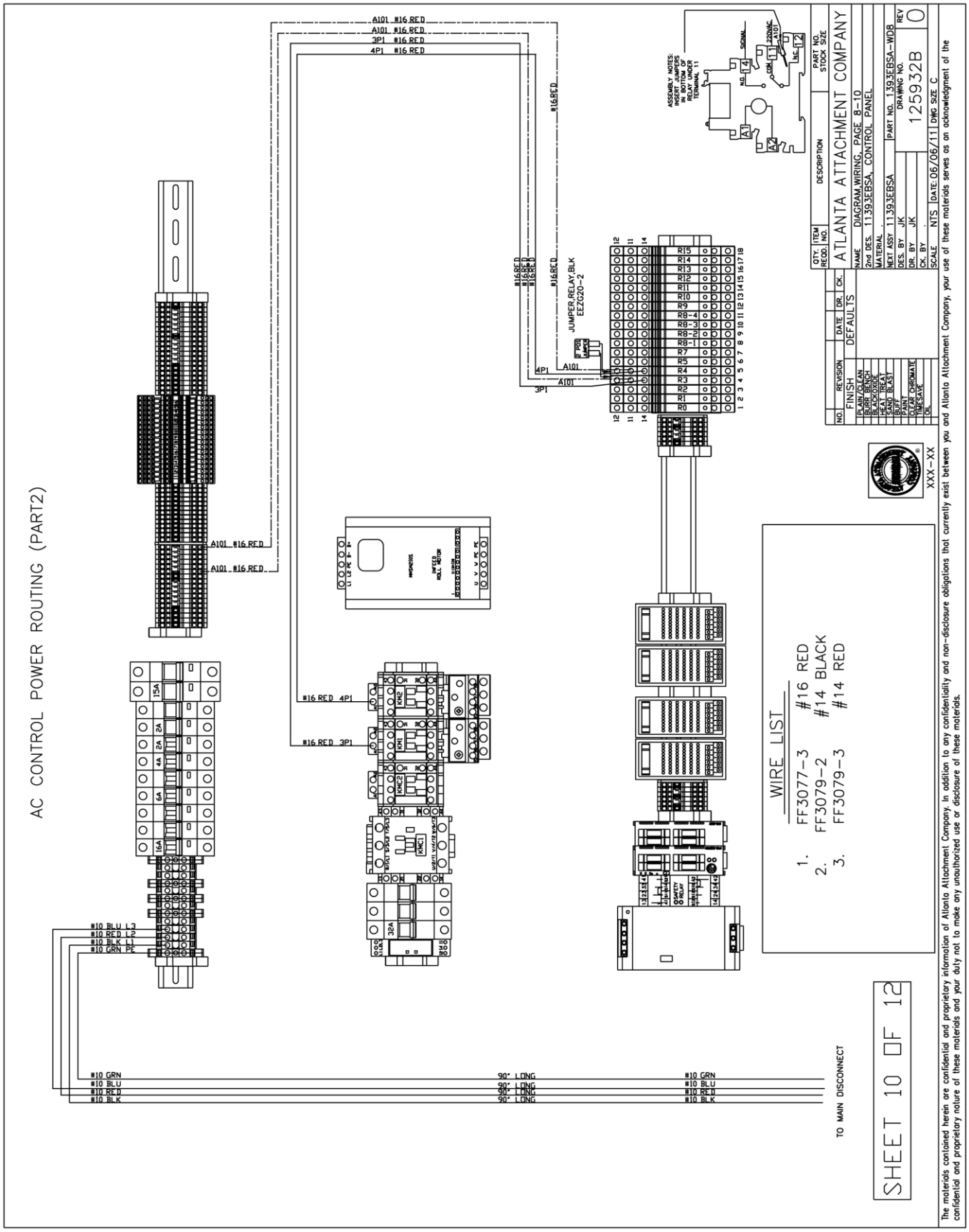

1393EBSA-WD8 Wiring Diagram 11 of 12

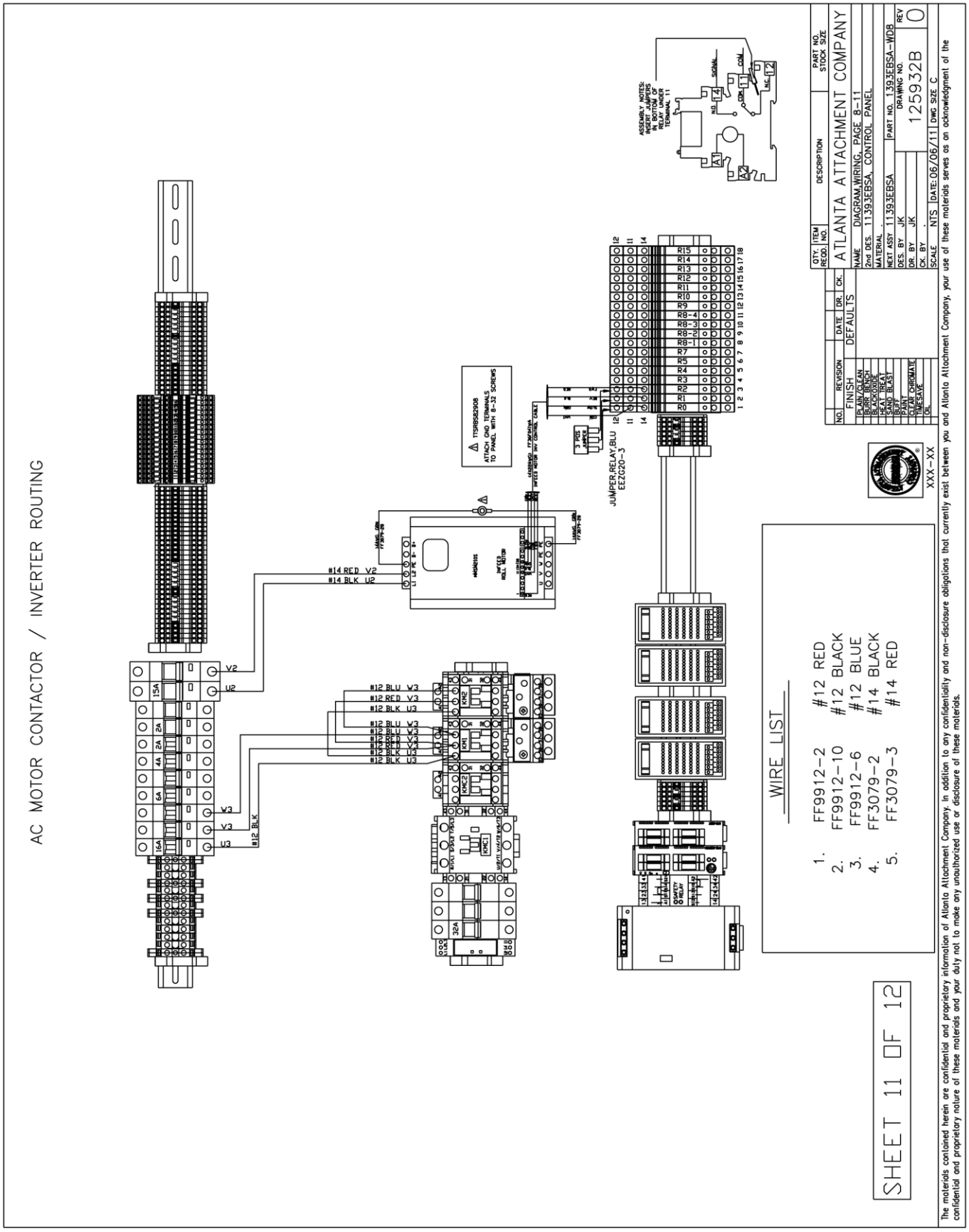

1393EBSA-WD8 Wiring Diagram 12 of 12

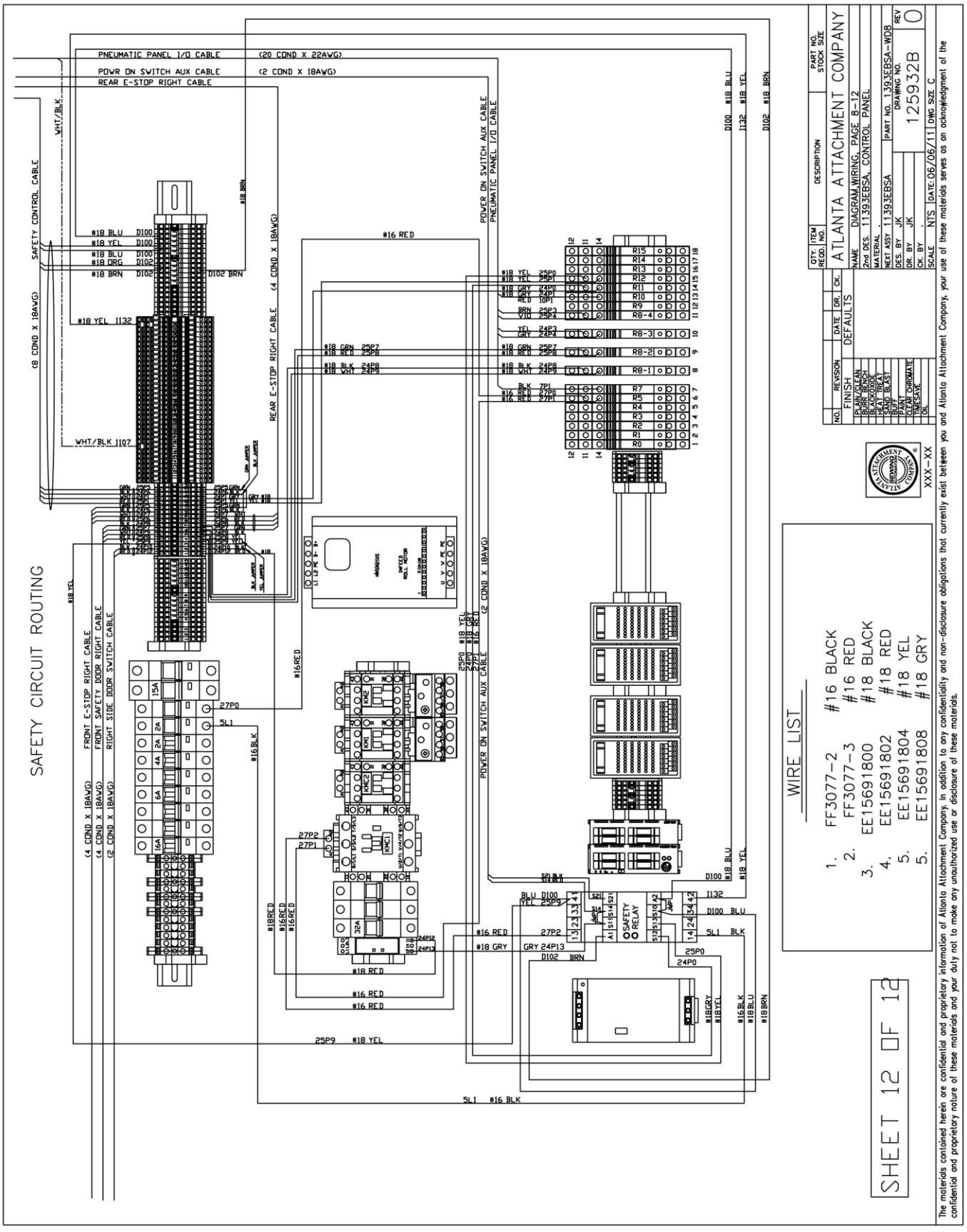

Atlanta Attachment Company (AAC) Statement of Warranty

Manufactured Products

Atlanta Attachment Company warrants manufactured products to be free from defects in material and workmanship for a period of eight hundred (800) hours of operation or one hundred (100) days whichever comes first. Atlanta Attachment Company warrants all electrical components of the Serial Bus System to be free from defects in material or workmanship for a period of thirty six (36) months.

Terms and Conditions:

- AAC Limited Warranty becomes effective on the date of shipment.
- AAC Warranty claims may be made by telephone, letter, fax or e-mail. All verbal claims must be confirmed in writing.
- AAC reserves the right to require the return of all claimed defective parts with a completed warranty claim form.
- AAC will, at its option, repair or replace the defective machine and parts upon return to AAC.
- AAC reserves the right to make the final decision on all warranty coverage questions.
- AAC warranty periods as stated are for eight hundred (800) hours or one hundred (100) days whichever comes first.
- AAC guarantees satisfactory operation of the machines on the basis of generally accepted industry standards, contingent upon proper application, installation and maintenance.
- AAC Limited Warranty may not be changed or modified and is not subject to any other warranty expressed or implied by any other agent, dealer, or distributor unless approved in writing by AAC in advance of any claim being filed.

What Is Covered

- Electrical components that are not included within the Serial Bus System that fail due to defects in material or workmanship, which are manufactured by AAC are covered for a period of eight hundred (800) hours.
- Mechanical parts or components that fail due to defects in material or workmanship, which are manufactured by AAC.
- Purchased items (sewing heads, motors, etc.) will be covered by the manufacturers (OEM) warranty.
- AAC will assist in the procurement and handling of the manufacturers (OEM) claim.

What Is Not Covered

- Parts that fail due to improper usage, lack of proper maintenance, lubrication and/or modification.
- Damages caused by; improper freight handling, accidents, fire and issues resulting from unauthorized service and/or personnel, improper electrical, plumbing connections.
- Normal wear of machine and parts such as Conveyor belts, "O" rings, gauge parts, cutters, needles, etc.
- Machine adjustments related to sewing applications and/or general machine operation.
- Charges for field service.
- Loss of time, potential revenue, and/or profits.
- Personal injury and/or property damage resulting from the operation of this equipment.

Declaración de Garantia

Productos Manufacturados

Atlanta Attachment Company garantiza que los productos de fabricación son libres de defectos de mate-rial y de mano de obra durante un periodo de ochocientos (800) horas de operación o cien (100) días cual llegue primero. Atlanta Attachment Company garantiza que todos los componentes del Serial bus son libres de defectos de material y de mano de obra durante un periodo de treinta y seis (36) meses.

Términos y Condiciones:

- La Garantía Limitada de AAC entra en efecto el día de transporte.
- Reclamos de la Garantía de AAC pueden ser realizados por teléfono, carta, fax o correo electrónico. Todo reclamo verbal tiene que ser confirmado vía escrito.
- AAC reserva el derecho para exigir el retorno de cada pieza defectuosa con un formulario de reclamo de garantía.
- AAC va, según su criterio, reparar o reemplazar las máquinas o piezas defectuosas devueltas para AAC.
- AAC reserva el derecho para tomar la decisión final sobre toda cuestión de garantía.
- Las garantías de AAC tiene una validez de ochocientas (800) horas o cien (100) días cual llega prim-ero.
- AAC garantiza la operación satisfactoria de sus máquinas en base de las normas aceptadas de la industria siempre y cuando se instale use y mantenga de forma apropiada.
- La garantía de AAC no puede ser cambiado o modificado y no está sujeto a cualquier otra garantía implicado por otro agente o distribuidor menos al menos que sea autorizado por AAC antes de cual-quier reclamo.

Lo Que Está Garantizado

- Componentes eléctricos que no están incluidos dentro del sistema Serial Bus que fallen por defectos de materiales o de fabricación que han sido manufacturados por AAC son garantizados por un peri-odo de ochocientas (800) horas.
- Componentes mecánicos que fallen por defectos de materiales o de fabricación que han sido manu-facturados por AAC son garantizados por un periodo de ochocientas (800) horas.
- Componentes comprados (Motores, Cabezales,) son protegidos debajo de la garantía del fabricante.
- AAC asistirá con el manejo de todo reclamo de garantía bajo la garantía del fabricante.

Lo Que No Está Garantizado

- Falla de repuestos al raíz de uso incorrecto, falta de mantenimiento, lubricación o modificación.
- Daños ocurridos a raíz de mal transporte, accidentes, incendios o cualquier daño como resultado de servicio por personas no autorizados o instalaciones incorrectas de conexiones eléctricas o neumáti-cas.
- Desgaste normal de piezas como correas, anillos de goma, cuchillas, agujas, etc.
- Ajustes de la máquina en relación a las aplicaciones de costura y/o la operación en general de la máquina.
- Gastos de Reparaciones fuera de las instalaciones de AAC
- Pérdida de tiempo, ingresos potenciales, y/o ganancias.
- Daños personales y/o daños a la propiedad como resultado de la operación de este equipo.

Atlanta Attachment Company
362 Industrial Park Drive
Lawrenceville, GA 30046
770-963-7369
www.atlatt.com

Printed in the USA