Model **1366-18S**

Revision 3.5 Updated Feb 29, 2016

Technical Manual & Parts Lists

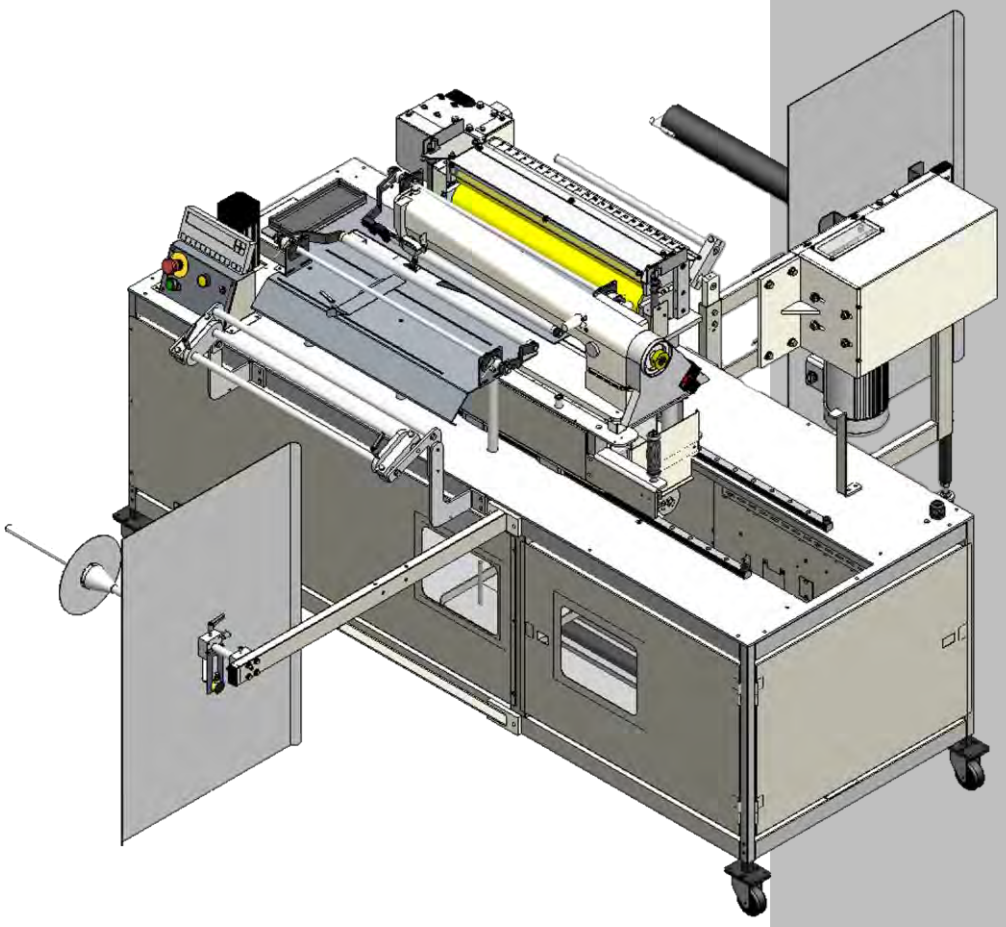

Atlanta Attachment Company

362 Industrial Park Drive

Lawrenceville, GA 30046

770-963-7369 • www.atlatt.com

ATLANTA ATTACHMENT COMPANY, INC.

Confidential and Proprietary Information

The materials contained herein are confidential and proprietary information of Atlanta Attachment Company. In addition to any confidentiality and non-disclosure obligations that currently exist between you and Atlanta Attachment Company, your use of these materials serves as an acknowledgment of the confidential and proprietary nature of these materials and your duty not to make any unauthorized use or disclosure of these materials.

All materials contained herein are additionally protected by United States Copyright law and may not be used, disclosed, reproduced, distributed, published or sold without the express written consent of Atlanta Attachment Company, which consent may be withheld in Atlanta Attachment Company's sole discretion. You may not alter or remove any copyright, trademark or other notice from copies of these materials.

This equipment may be protected by one or more US and foreign patents.

For a complete list visit
atlatt.com/patents.php

IMPORTANT

It is important to read and understand the information contained within this manual before attempting to operate the machine. Atlanta Attachment Co., Inc. shall not be held liable for damage resulting from misuse of the information presented within, and reserves the right to change the information contained within, without prior notification.

Contents

Important Safety Instruction 1
Liability 2
Safety Equipment on the Machines 3
Protective Eyewear 4
Important Notices 5
Maintenance 7
Repair 8
A Word to the End User 9
Safety Precautions 9
1.1. Parts and Components 10
1.2. Technical Data 11
1.3. Installation & Set Up 11
1.4. Lockout / Tag out 12
2. OPERATING MANUAL 13
2.1. Individual Components 13
2.1.1. Control Panel 13
2.1.2. Light Tower 13
2.1.3. Control Box 14
2.1.4. Foot Pedal 14
2.2. Touch-Screen 14
2.2.1. General Operation 14
2.2.2. Menus 15
1. Start Menu 15
2. Order Setup 16
3. Default Patterns Chart 17
a. Continues Mode 18
a.1 Change Patterns 19
a.2. Creating a New pattern 19
a.3. Continue Mode Parameters 20
b. Border Mode 21
b.1. Change Border 22
b.2. Creating a New Border 23
b.3. Border Mode Parameters 24
3. Operator Screen 25
4. Yardage Count 26
5. Border Count 26

6. Advance Functions 27
2.3. Changing the Needle 28
1. How to set the needle 28
2.4. Threading 29
2.4.1. Needle 30
2.4.2. Looper 30
2.5. Loading Material 31
2.6. Sewing Procedure 32
2.6. Maintenance 34
Daily 34
3.-TECHNICAL MANUAL 35
3.1. Sewing Head Adjustments 35
3.1.1. Adjusting the needle height of the needle bar 35
3.1.2. Matching the needle and the looper 35
3.1.3. Matching the looper 36
3.1.4. Scooping amount of the lopper 36
1. Clearance between the looper and the needle 37
3.1.5. The timing of the needle guard 37
3.1.6. Position of the needle guard 37
3.1.7. Thread spreader 37
1. The timing of thread spreader against the needle 37
2. Position of the thread spreader latch 38
3.1.8. Method of thread spreader 38
1. On lopper thread cam 39
2. On the position of the take-up thread tension 39
3. On the frame thread eyelet 39
4. Function of the thread take-up tension plate 40
5. Function of the thread take-up tension disc 40
6. Relation thread take-up tension plate / take-up thread tension disc 40
3.2. Pneumatic 41
3.2.1. Winder Clutch Regulator (A) 41
3.2.2. Main Air pressure (B) 41
3.2.3. Roller pressure (C) 41
3.3. Electrical 42
3.3.1. Main Power Switch 42
3.3.2. Hand wheel Eye (Part # FFSM312VQ) 43
1. Reflective Tape Maintenance (Part # EEFE-RR2) 43

3.3.3. Sewing Head Sensors Eye (Part # FFSM312VQ) 43
3.3.4. Eye Sensor Adjustment (Part # FFSM312VQ) 44
3.3.5. Limits Switches 44
3.3.6. Fabric Sensor (Part # FFRK44T-4) 44
3.4. Efka Motor 45
3.4.1. Parameter List 45
3.4.2. Efka Box Error Codes 48
3.4.3. Flow Chart EFKA Error E1 49
3.5. Serial Bus 50
3.5.1. Calibrating the Touch Screen 50
3.5.2. Installation of a new Touch Screen. 51
3.5.3. Standard Modules 52
3.5.4. Update a Machine using a New Program Module 53
3.6. Maintenance 54
3.5.1. Daily (8 -10 hrs. of operation). 54
3.5.2. Weekly (40 hrs. of operation) 54
3.5.3. Monthly (160 hrs. of operation) 54
3.6.4. Sewing 55
Frictional heat of the needle and silicon oil lubricant unit 57
Formation of “Balloon” stitch 57
Reverse stitch skipping 58
Assembly Drawings & Parts Lists 60
11366-18S Vertical Stitch Machine 62
1366006 Cross-Sew Head Assembly 64
1366155 Cross-Sew Head Sub Assembly 66
1347126 Motor/Tensioner Assembly 67
1366033 Thread Stand Assembly 68
1366010 Carriage, 24” Sewing 70
1366022 Electric Panel Assembly 72
1366029 Cloth Plate Assembly 74
1366043 Tension Rack Assembly 75
1366115 Encoder Assembly 76
4300285 Encoder Assembly 77
1366140 Guillotine Assembly 78
1366114 Guillotine Assembly,18” 80
1366150 Worm Gear Drive Adaptor 81
1961-250G Prefeed Assembly, 24” Cap 82

1961-320M Rewind Assembly, w/o Sleeve 84
1961-KIT6B Prefeed Assembly, 3 Roll 85
1366012 Handle Assembly 86
33008708 Ball Bearing Disc Assembly 87
1366S-PD Pneumatic Diagram 88
1366S-WD1 Wiring Diagram 89
1961-320SWD Wiring Diagram 90

Important Safety Instruction

This part of the Instruction Material is provided for the safe use of your equipment. It contains important information to help work safely with the unit and describes the dangers inherent in machinery. Some of these dangers are obvious, while others are less evident.

Mandatory Information

All persons operating and/or working on the 1366-18S Vertical Stitch Machine should read and understand all parts of the Safety Instructions. This applies, in particular, for persons who only operate and/or work on the unit occasionally (e.g. for maintenance and repair). Persons who have difficulty reading must receive particularly thorough instruction.

Scope of the Instruction Material

- The Instruction Material comprises:
- Safety information
- Operator Instructions
- Electrical and Pneumatic diagrams

And may also include;

- A list of recommended spare parts
- Instruction Manual(s) for components made by other manufacturers
- The layout and installation diagram containing information for installation

Intended Use

Our machines are designed and built in line with the state of the art and the accepted safety rules. However, all machines may endanger the life and limb of their users and/or third parties and be damaged or cause damage to other property, particularly if they are operated incorrectly or used for purposes other than those specified in the Instruction Manual.

Exclusion of Misuse

Non-conforming uses include, for example, using the equipment for something other than it was designed for, as well as operation without duly installed safety equipment. The risk rests exclusively with the end user.

Conforming use of the machine includes compliance with the technical data, information and regulations in all parts of the complete Instruction Material, as well as compliance with the maintenance regulations. All local safety and accident prevention regulations must also be observed.

Liability

The machine should only be operated when in perfect working order, with due regard for safety and the potential dangers, as well as in accordance with the Instruction Material. Faults and malfunctions capable of impairing safety should be remedied immediately. We cannot accept any liability for personal injury or property damage due to operator errors or non-compliance with the safety instructions contained in this booklet. The risk rests exclusively with the end user.

The Instruction Material should always be kept near the machine so that it is accessible to all concerned.

The local, general, statutory and other binding regulations on accident prevention and environmental protection must also be observed in addition to the Instruction Material. The operating staff must be instructed accordingly. This obligation also includes the handling of dangerous substances and provision/use of personal protective equipment.

The Instruction Material should be supplemented by instructions, including supervisory and notification duties with due regard for special operational features, such as the organization of work, work sequences, the personnel deployed, etc.

The personnel's awareness of the dangers and compliance with the safety regulations should be checked at irregular intervals.

Choice and Qualification of Personnel

Ensure that work on the machine is only carried out by reliable persons who have been appropriately trained for such work - either within the company, by our field staff or at our office - and who have not only been duly appointed and authorized, but are also fully familiar with the local regulations. Work on the machine should only be carried out by skilled personnel, under the management and supervision of a duly qualified engineer.

This not only applies when the machine is used for production, but also for special work associated with its operation (start-up and maintenance), especially when it concerns work on the hydraulic or electrical systems, as well as on the software/serial bus system.

Training

Everyone working on or with the machine should be duly trained and informed with regard to correct use of the safety equipment, the foreseeable dangers which may arise during operation of the machine and the safety precautions to be taken. In addition, the personnel should be instructed to check all safety mechanisms at regular intervals.

Responsibilities

Clearly define exactly who is responsible for operating, setting-up, servicing and repairing the machine. Define the responsibilities of the machine operator and authorize him to refuse any instructions by third parties if they run contrary to the machine's safety. This applies in particular for the operators of machines linked to other equipment. Persons receiving training of any kind may only work on or with the machine under the constant supervision of an experienced operator. Note the minimum age limits permitted by law.

A Word to the Operator

The greatest danger inherent in our machines:
is that of fingers, hands or loose clothing being drawn into a machine by live, coasting or rotating tools or assemblies or of being cut by sharp tools or burned by hot elements.

ALWAYS BE CONSCIOUS OF THESE DANGERS!

Safety Equipment on the Machines

All machines are delivered with safety equipment, which shall not be removed or bypassed during operation.

The correct functioning of safety equipment on machines and systems should be checked every day and before every new shift starts, after maintenance and repair work, when starting up for the first time and when restarting (e.g. after prolonged shutdowns).

If safety equipment has to be dismantled for setting-up, maintenance or repair work, such safety equipment shall be replaced and checked immediately upon completing the maintenance or repair work. All protective mechanisms shall be fitted and fully operational whenever the machine is at a standstill or if it has been shut down for a longer period of time.

Damage

If any changes capable of impairing safety are observed in the machine or its mode of operation, such as malfunctions, faults or changes in the machine or tools, appropriate steps must be taken immediately, the machine switched off and a proper lockout tagout procedure followed. The machine should be examined for obvious damage and defects at least once per shift. Damage found shall be immediately remedied by a duly authorized person before resuming operation of machine.

The machine should only be operated when in perfect working order and when all protective mechanisms and safety equipment, such as detachable protective mechanisms, emergency STOP systems, etc. are in place and operational.

Faults or Errors

The machine must be switched off and all moving or rotating parts allowed to come to a standstill and secured against accidental restart before starting to remedy any faults or errors.

Signs on the Machine

Safety and danger signs on the machine should be observed and checked at regular intervals to ensure that they are complete and undamaged. They should be clearly visible and legible at all times.
Clothing, Jewelry, Protective Equipment
Long loose hair, loose-fitting clothes, gloves and jewelry, including rings, should be avoided in order to avoid injuries due to being caught, drawn in and wound up inside the machine.

Protective Eyewear

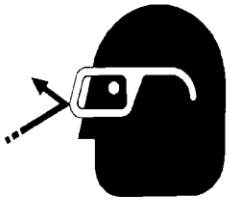

Protective eyewear that has been tested by the local authorities should be worn whenever there is a possibility of loose or flying objects or particles such as when cleaning the machine with compressed air.

Tools

Always count the number of tools in your possession before starting work on the machine. This will allow you to check that no tools have been left behind inside the machine. Never leave a tool in the machine while working.

Oils, Lubricants, Chemicals

Note the applicable safety regulations for the product used.

No Smoking, Fire, Explosion Hazard

Smoking and open flame (e.g. welding work) should be prohibited in the production area due to the risk of fire and explosions.

Workplace

A clear working area without any obstructions whatsoever is essential for safe operation of the machine. The floor should be level and clean, without any waste.

The workplace should be well lit, either by the general lighting or by local lights.

Emergency STOP

The emergency STOP buttons bring all machine movements to a standstill. Make sure you know exactly where they are located and how they work. Try them out. Always ensure easy access to the nearest emergency STOP button while working on the machine.

First Aid

1. Keep calm even when injured.
2. Clear the operator from the danger zone. The decision of what to do and whether to seek additional assistance rests entirely with you, particularly if someone has been trapped.
3. Give First Aid. Special courses are offered by such organizations as the employers' liability insurance association. Your colleagues should be able to rely on you and vice versa.
4. Call an ambulance. Do you know the telephone numbers for the ambulance service, police and fire service?

Important Notices

Reporting and Fighting Fires

Read the instructions posted in the factory with regard to reporting fires and the emergency exits. Make sure you know exactly where the fire extinguishers and sprinkler systems are located and how they are operated. Pass on the corresponding information to the firemen when they arrive. Ensure there are enough signs to avoid fire hazards.

The following fire extinguishers may be used:
- Dry powder extinguishers, ABC fire-extinguishing powder.
- Carbon dioxide fire extinguishers to DIN 14461 for electronic components. Great care must be exercised when using carbon dioxide fire extinguishers in confined, badly ventilated rooms (see DIN 14406 and 14270).

Isolate the machine from the power supply if a fire breaks out. Do not use water on burning electrical parts until it is absolutely certain that they have been completely disconnected from the power supply. Burning oils, lubricants, plastics and coatings on the machine can give off gases and vapors that may be harmful to your health.
A qualified person should be consulted to repair the damage after a fire.

Electrical Power Supply

Before undertaking any maintenance or repair work on the machine, switch off the electrical power to the machine at the main source and secure it with a padlock so that it cannot be switched on again without authorization.
In practice, this may mean that the technician, electrician and operator all attach their own padlock to the master switch simultaneously so that they can carry out their work safely. Locking extension plates should be available for multiple locks if required. The primary purpose for a lockout/tagout procedure is to protect workers from injury caused by unexpected energizing or start-up of equipment.

Energy sources (electrical/pneumatic/hydraulic, etc.) for the equipment shall be turned off or disconnected and the switches locked or labeled with a warning tag. It is the responsibility of the employer to establish control procedures. Follow lockout/tagout procedures before, setup and/or any service or maintenance work is performed, including lubrication, cleaning or clearance of jams.

Caution: The machine is still not completely de-energized even when the master switch is off.

- Electricity - The machine is always isolated from the electrical power supply whenever the master switch has been switched off. However, this does not apply for the power supply in the control cabinet, nor for equipment that does not draw its power via the master switch.

- Pneumatic / hydraulic energy - Almost all our machines carry compressed air. In addition to switching off the master switch, the air supply must also be disconnected and the machine checked to ensure it is depressurized before starting any work on the machine; otherwise the machine may execute uncontrolled movements.

- Kinetic energy - Note that some motors or spindles, for example, may continue to run or coast run on after being switched off.

- Potential energy - Individual assemblies may need to be secured if necessary for repair work.

Delivery of the Machine/Packaging

Note any markings on the packaging, such as weights, lifting points and special information. Avoid temperature fluctuations. Condensation may damage the machine.

Transport Damage

The packaging and machine must immediately be examined for signs of damage in transit. Such damage must be reported to the shipper/transporter within the applicable time limits. Contact Atlanta Attachment Company and/or your transport insurer immediately, if signs of damage are visible. Never operate a damaged machine.

Interim Storage

If the machine has to be stored temporarily, it must be oiled or greased and stored in a dry place where it is protected from the weather in order to avoid damage. A corrosion-inhibiting coating should be applied if the machine has to be stored for a longer period of time and additional precautions taken to avoid corrosion.

Transporting the Machine

Disconnect the machine from all external connections and secure any loose assemblies or parts. Never step under a suspended load. When transporting the machine or assemblies in a crate, ensure that the ropes or arms of a forklift truck are positioned as close to the edge of the crate as possible. The center of gravity is not necessarily in the middle of the crate. Note the accident prevention regulations, safety instructions and local regulations governing transport of the machine and its assemblies.

Only use suitable transport vehicles, hoisting gear and load suspension devices that are in perfect working order and of adequate carrying capacity. Transport should only be entrusted to duly qualified personnel.

Never allow the straps to rest against the machine enclosure and never push or pull sensitive parts of the machine. Ensure that the load is always properly secured. Before or immediately after loading the machine, secure it properly and affix corresponding warnings.
All transport guards and lifting devices must be removed before the machine is started up again. Any parts that are to be removed for transport must be carefully refitted and secured before the machine is started up again.

Workplace Environment

Our machines are designed for use in enclosed rooms: Permissible ambient temperature approx. 5 - 40 °C (40 - 104 °F). Malfunctions of the control systems and uncontrolled machine movements may occur at temperatures outside this range. Protect against climatic influences, such as electrostatic charges, lightning strikes, hail, storm damage, high humidity, salinity of the air in coastal regions.

Protect against influences from the surroundings: no structure-borne vibrations, no grinding dust, or chemical vapors.
Protect against unauthorized access.
Ensure that the machine and accessories are set up in a stable position.
Ensure easy access for operation and maintenance (Instruction Manual and layout diagram); also verify that the floor is strong enough to carry the weight of the machine.

Local Regulations

Particular attention must be paid to local and statutory regulations, etc. when installing machines and the plant (e.g. with regard to the specified escape routes). Note the safety zones in relation to adjacent machines.

Maintenance

General Safety Instructions

The machine shall be switched off, come to a standstill and be secured so that it cannot be switched on again inadvertently before starting any maintenance work whatsoever. Use proper lockout/tagout procedures to secure the machine against inadvertent startup.
Remove any oil, grease, dirt and waste from the machine, particularly from the connections and screws, when starting the maintenance and/or repair work. Do not use any corrosive-cleaning agents. Use lint-free rags.
Retighten all screw connections that have to be loosened for the maintenance and repair work. Any safety mechanisms that have to be dismantled for setting-up, maintenance or repair purposes must be refitted and checked immediately after completing the work.

Maintenance, Care, Adjustment

The activities and intervals specified in the Instruction Manual for carrying out adjustments, maintenance and inspections must be observed and parts replaced as specified.

All hydraulic and pneumatic lines should be examined for leaks, loose connections, rubbing and damage whenever the machine is serviced. Any defects found must be remedied immediately.

Waste, Disassembly, Disposal

Waste products should be cleared from the machine as soon as possible as not to create a fire hazard. Ensure that fuels and operating lubricants, as well as replacement parts are disposed of in a safe and ecologically acceptable manner. Note the local regulations on pollution control.

When scrapping (disassembling) the machine and its assemblies, ensure that these materials are disposed of safely. Either commission a specialist company familiar with the local regulations or note the local regulations when disposing of these materials yourself. Materials should be sorted properly.

Repair

Replacement Parts

We cannot accept any liability whatsoever for damage due to the use of parts made by other manufacturers or due to unqualified repair or modification of the machine.

Repair, Electrical

The power supply must be switched off (master switch off) and secured so that it cannot be switched on again inadvertently before starting any work on live parts.

Those parts of the machine and plant on which inspection, maintenance or repair work is to be carried out must be isolated from the power supply, if specified. The isolated parts must first be checked to determine that they are truly de-energized before being grounded and short-circuited. Adjacent live parts must also be isolated.

The protective measures implemented (e.g. grounding resistance) must be tested before restarting the machine after all assembly or repair work on electric parts.

Signal generators (limit switches) and other electrical parts on the safety mechanisms must not be removed or bypassed. Only use original fuses or circuit overloads with the specified current rating. The machine must be switched off immediately if a fault develops in the electrical power supply.

The electrical equipment of our machines must be checked at regular intervals and any defects found must be remedied immediately.

If it is necessary to carry out work on live parts, a second person should be on hand to operate the emergency OFF switch or master switch with voltage release in the event of an emergency. The working area should be cordoned off and marked by a warning sign. Only use electrically insulated tools.

Ventilation/Hazardous Gases

It is the end users responsibility to ensure adequate ventilation is provided to exhaust any and all noxious or hazardous gases that may be present in the working environment.

Hydraulic and Pneumatic Systems

Work on hydraulic or pneumatic equipment shall only be carried out by persons with training, knowledge and experience of hydraulic systems. Pressure lines shall be depressurized before starting any repair work.

General Liability

Liability for machine damage and personal injury is extinguished completely if any unauthorized conversions or modifications are undertaken. The machine must not be modified, enlarged or converted in any way capable of affecting safety without the manufacturer's prior approval.

Starting Machine Movements

Read the Instruction Manual carefully to establish which keys and functions start machine movements.

A Word to the End User

The end user has sole responsibility to enforce the use of safety procedures and guards on the machine. Any other safety devices or procedures due to local regulations should be should be retrofitted in accordance to these regulations and/or the EC Directive on the safety of machines.

Operator's position must always be readily accessible. Escape routes must always be kept clear and safety areas should be identified.

Safety Precautions

Safety should be a constant concern for everyone. Always be careful when working with this equipment. While normal safety precautions were taken in the design and manufacture of this equipment, there are some potential safety hazards.
Everyone involved with the operation and maintenance of this equipment should read and follow the instructions in this manual.
Operate the equipment only as stated in this manual. Incorrect use could cause damage to the equipment or personal injury.
It is the owner's responsibility to make certain that the operator reads and understands this manual before operating this equipment. It is also the owner's responsibility to make certain that the operator is a qualified and physically able individual, properly trained in the operation of this equipment.
Specific safety warning decals are located on the equipment near the immediate areas of potential hazards. These decals should not be removed or obliterated. Replace them if they become non-readable.

- ALWAYS keep safety shields and covers in place, except for servicing.
- ALWAYS operate equipment in daylight or with adequate working lights.
- Follow daily and weekly checklists, making sure hoses are tightly secured and bolts are tightened.
- ALWAYS watch and avoid holes or deep depressions.
- ALWAYS wear adequate eye protection when servicing the hydraulic system and battery.
- NEVER operate a poorly maintained machine.
- NEVER allow persons to operate this machine without proper instruction.
- NEVER put hands or feet under any part of the machine while it is running.
- NEVER attempt to make any adjustments or repairs to the machine while running. Repairs or maintenance should be performed by trained personnel only.
- NEVER work under the machine unless it is safely supported with stands, blocks or a hoist and blocks.
- NEVER touch hot parts of machine.

1. INSTALLATION MANUAL

It is important that the machine operator and technician read this manual and is familiar with all the functions and safety concerns of the unit before Installing and operating.

1.1. Parts and Components

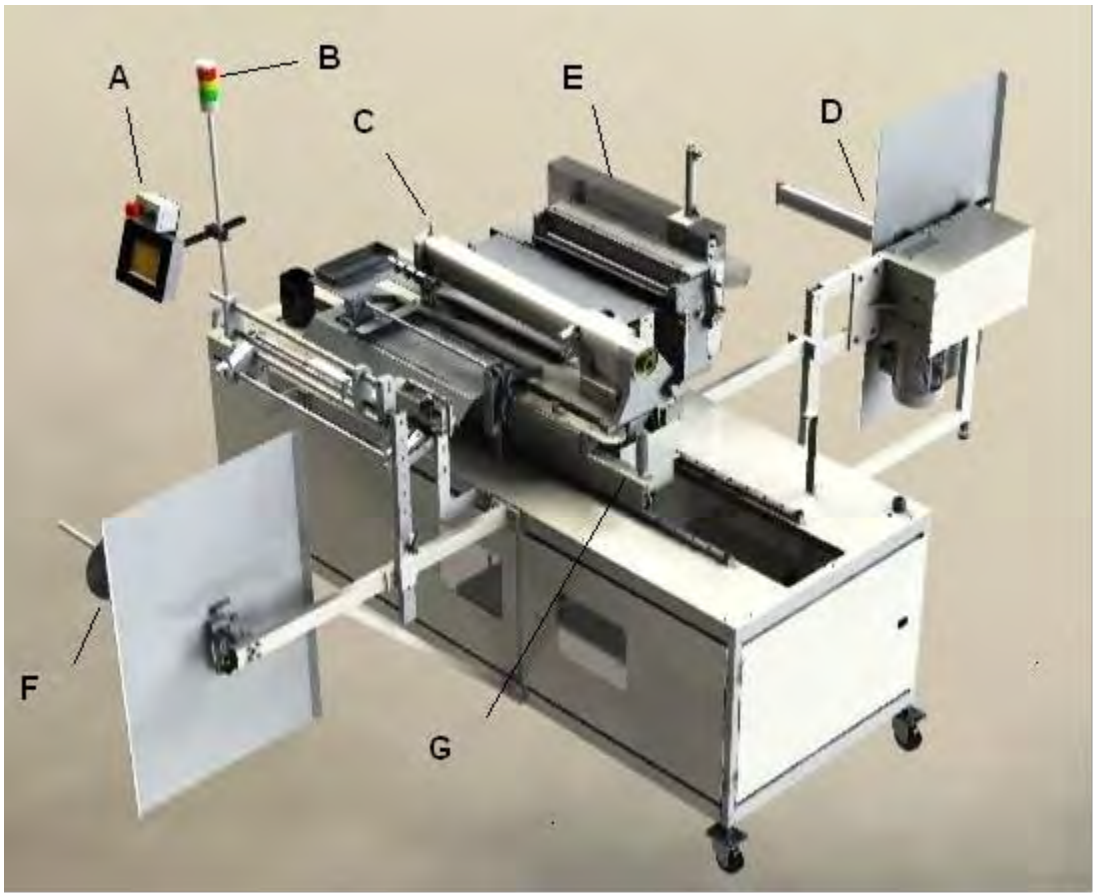

A	Control Panel
B	Light Tower
C	Sewing Head
D	Roll Winder
E	Cutting Station / Puller
F	Roll Holder
G	Sewing Head Release button

1.2. Technical Data

Max Speed	3.000 rpm
Factory Pre-set Speed	2600 rpm
Max Stitch Length	6 psi
Max Border Width	18”
Needle System	SNTVX7X140
Weight of material	Light / Medium
Voltage	220~240VAC 1PH,
Current	15 Amps
Motor Type	Efka DC
Air Pressure	80psi
Air Consumption	5 cfm
Shipping Weight	800 lbs
Shipping Dimensions	96” x 100” x 60”
Foot Print	164L x 77W x 76H
Production	13-35 borders per hour depending on pattern and width of border

1.3. Installation & Set Up

- •Remove all shipping straps from machine.
- •Inspect the machine for any damage that may have occurred during shipping. If damage is found, report this immediately to your supervisor. Document the damage and provide details and photographs.

- •Provide 220VAC, single phase, 15 Amp
- •Provide 1/4" air supply line (80 PSI).
- Oil is removed before shipping. Prior to using refill and check the oil level in the oil pan. (ISO Viscosity Grade 22#SO)

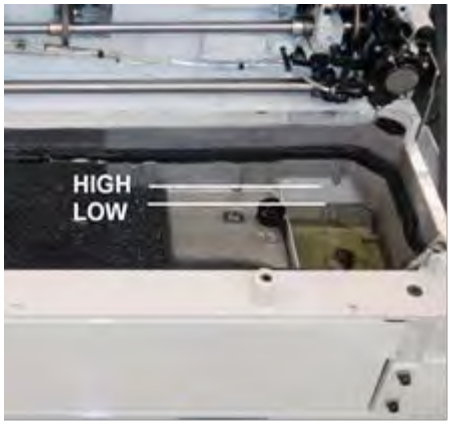

ATTENTION: Disconnect the “V” belt before tilting head back.

- •Power up and deal with any error codes.
- •Get the head sewing with thread on typical border using the manual foot pedal. Verify when running manual, the rewinder works.

- •Adjust sew eyes for best operation.
- •Adjust the feed calibration setting so that the pattern measures correctly.
- •Set up styles.
- •Test and adjust styles.

1.4. Lockout / Tag out

Equipment Energy Control Procedure Lockout/Tagout Program				
Equipment: Vertical Stitches			Models: 1366-18S	
Manufacturer: Atlanta Attachment Co.			Location:	
Energy		Location	Magnitude	Control Method
Electrical:	X	Behind Control Box	220V	Lockout & Tag
Pneumatic:	X	Input at main regulator	80 PSI	Shutoff Valve
Remember to Release All Stored Energy!				
Shutdown Procedure:				
• Inform all affected personnel that the machine will be in Lockout status. • Disconnect the air supply from the main regulator. • Turn the red off button on the back of the control panel. • Fill out the tag with necessary information of the Lockout. • Install the Lockout device. • Verify all stored electrical energy has been released by pressing the button. Also, use meter to test circuits in the electrical panel to insure stored energy is released there as well. • Perform necessary maintenance, services and/or repairs.				
Startup Procedure:				
• Inform all affected personnel that the Lockout of this machine is being removed. • Replace any guards or safety devices which may have been removed during maintenance. • Remove the Lockout device and tag. • Reconnect the air supply to the main regulator. • Push the green button on the back of the control panel to turn the machine on. • Inform all affected personnel that the Lockout has been removed and that the machine is ready for normal production operation.				

2. OPERATING MANUAL

It is important that the machine operator read this manual and is familiar with all the functions and safety concerns of the unit before operating.

2.1. Individual Components

2.1.1. Control Panel

The Control Panel allows the operator to start and stop the automatic function of the machine, shut off power to the machine in the event of an emergency.

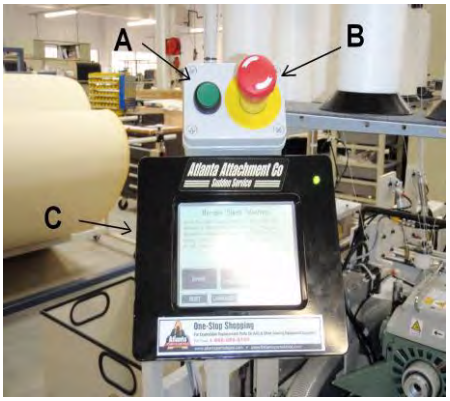

Emergency Stop (B)

Pressing this button will turn off power to the machine. This button will lock when pressed. Twisting the button will cause it to unlock and return to its normal position.

WARNING!! Unlocking the button with the Power On engaged will turn on power to the machine.

Power on (A)

Power the machine "ON".

Serial Bus Control (C)

Control all machine functions. See more details available on related chapters one this manual

2.1.2. Light Tower

The purpose of the light tower is to indicate current status of the machine at some distance away from the machine. This makes it easy to see machine status at a glance. Definitions for the different light states currently available on the unit are included below.

Light Status	Definition
Green Steady	Normal, machine producing
Green Flashing:	Machine producing borders but finish with the border soon f
Yellow Steady	Normal: machine powered but idling
Yellow Flashing:	Machine stopped in middle of order and needs operator activity before continuing
Red:	Available for future use, not currently utilized

2.1.3. Control Box

All 3 Efka Motor Control Boxes contain an On/Off switch which should remain in the “ON” position at all times. Puller, Carriage and Sewing head are controlled by these boxes

2.1.4. Foot Pedal

It is located on the front left corner of the sewing unit. It is used for a manual activation of the sewing cycle or when loading a new roll of materials.

2.2. Touch-Screen

It is important that the machine operator read this manual and is familiar with all the functions and safety concerns of the unit before operating.

2.2.1. General Operation

ATTENTION: DO NOT USE ANY SHARP OBJECTS TO TOUCH THE SCREEN

The graphics images presented on the touch screen show "3-dimensional" buttons, which may be pressed to access other screens, change counters and timers, or actuate hardware. Areas lacking the "3-dimensional" border contain information only.

Counters are identified with the "+" and "-" buttons in the corners. These counters may be adjusted by touching the "+" and "-" boxes.

RESET: Clears all machine functions and returns to the main page. time and date.

LANGUAGE: Return to the language screen. You can select multiple

languages to use.

HOME: Return to the main screen

ARROWS: Pressing the arrows right or left will take you to the next or previous pages.

NOTES: When a button has a white background the function is on or enabled. A dark background indicates off or disabled. Some buttons may toggle on or off, others must be held on.

Other screens display whenever there is a machine error or other condition that prohibits the operation of the machine. Simply follow the instruction on the screens to resolve the problem.

There are also “ADVANCED” settings and functions available. These functions are only accessible by a password, and include: timers that control machine hardware, input and output test screens, and machine statistics. To get to the advanced functions the appropriate password must be entered at the security screen. Security access is reset whenever the main power is turned off, or the RESET button on the main page is pressed. The factory default access code is "33333".

2.2.2. Menus

1. Start Menu

At power up the Language Screen is display

It shows the languages available
You will able to return to this screen and change the language from almost all the screen menus available

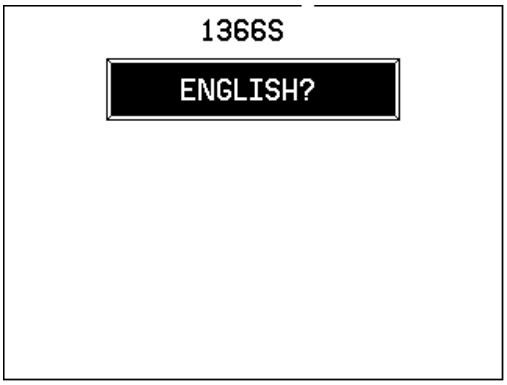

After Language “Slow Stitch Start” screen is displayed.

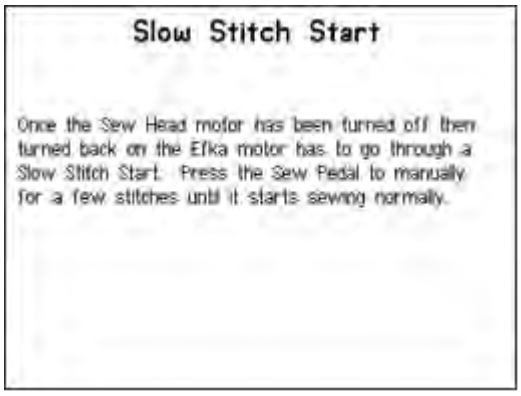

Step on the foot switch momentarily to sew a few stitches which prepare the sewing motor for automatic running. Then the “READY” screen is displayed.

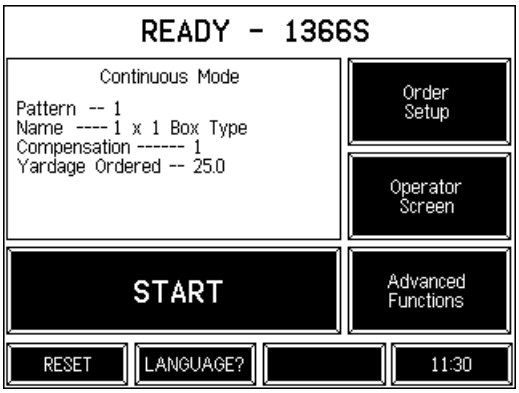

The READY screen shows the current status of the machine modes, either CONTINUOUS or BORDER. It also displays the current pattern selected, pattern name, compensation setting, and yardage ordered (continuous Mode) or piece counter (Border Mode).

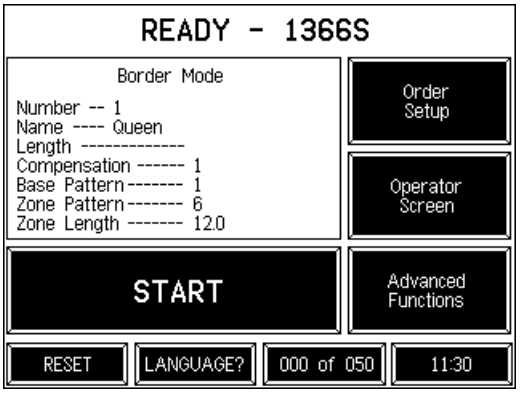

2. Order Setup

From the Ready Menu press Order Set-up
In CONTINUOUS mode the machine runs a continuous pattern with the option to preset the number of yards to make. In BORDER MODE the machine runs a programmed border length with or without a different “Zoned” pattern in the center of the sides of the bed

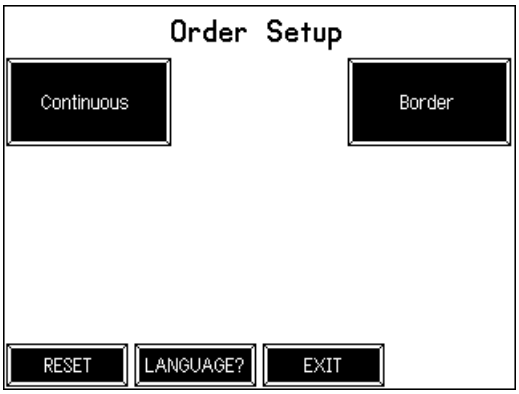

3. Default Patterns Chart

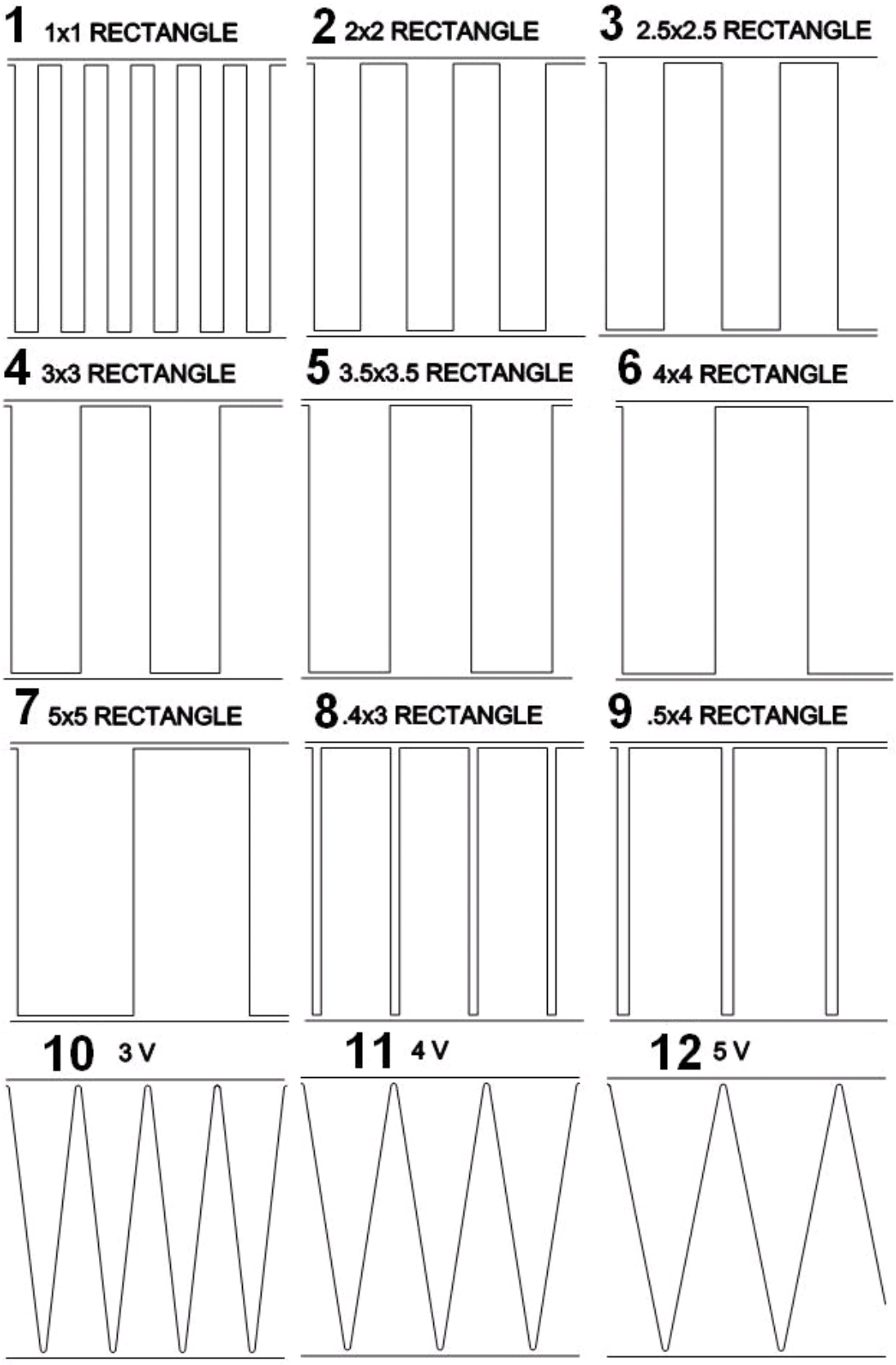

a. Continues Mode

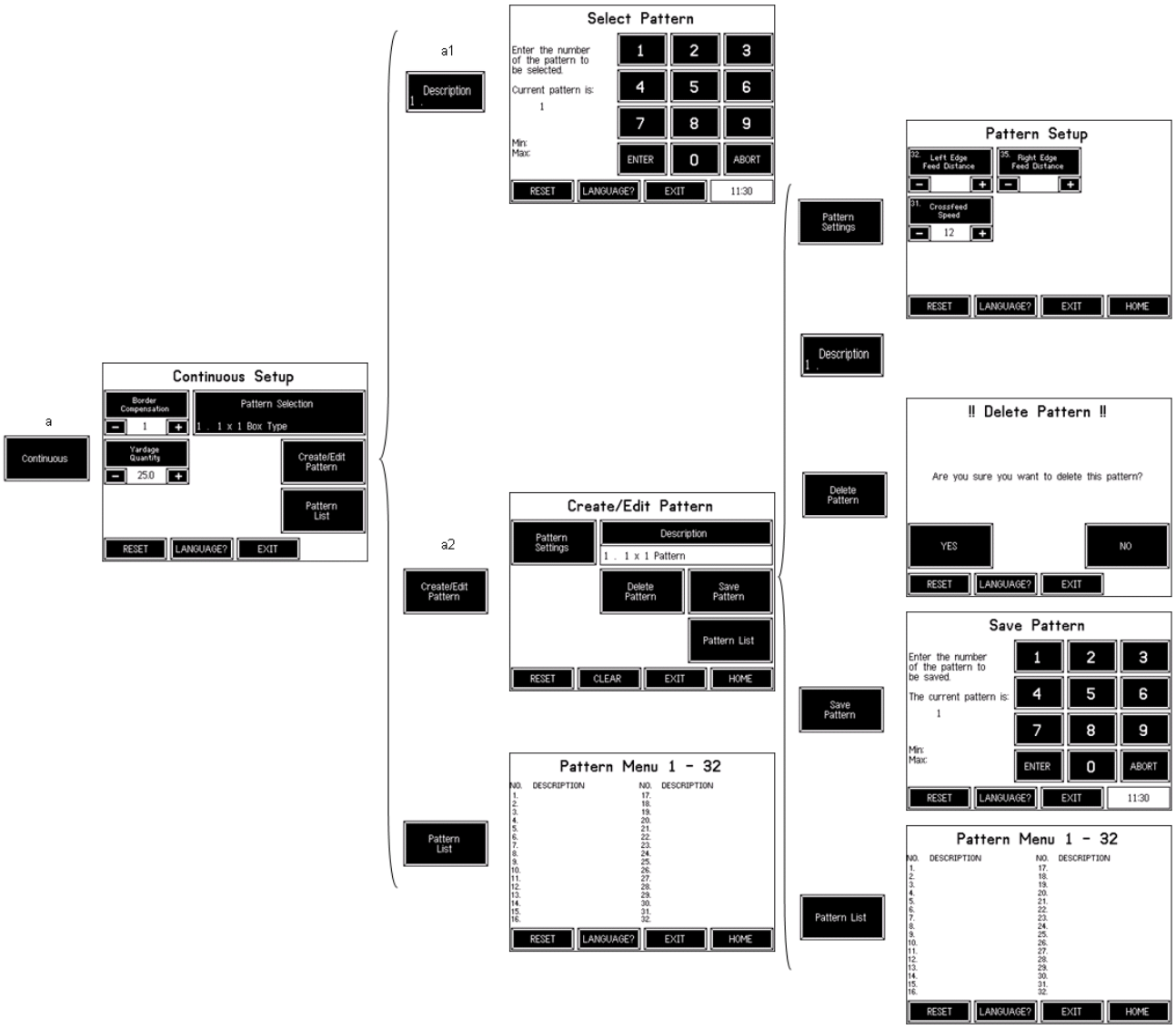

In CONTINUOUS mode the machine runs a continuous pattern with the option to preset the number of yards to make. If the correct pattern is displayed, press START to make border. To pause the machine PRESS TO PAUSE. The machine will finish the last pattern and stop on the left edge of the border.

To stop immediately, press the red E-stop button. Unless there is an emergency, you should always stop the machine with the PAUSE button so you do not mess up the pattern.

a.1 Change Patterns

From the ORDER SETUP Press CONTINUOUS

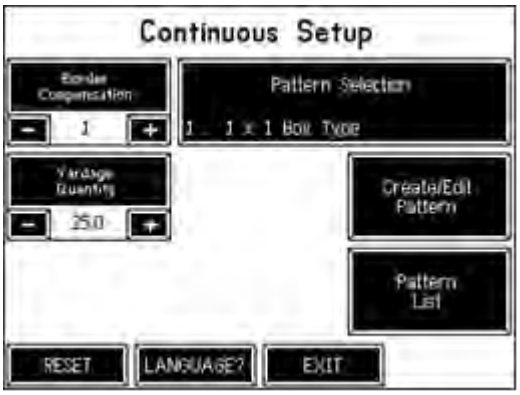

Then DESCRIPTION

Enter the desired pattern number and press enter. Exit or RESET back to the READY page. Be sure to check the yardage counter for the desired yards.
On the CONTINUOUS SETUP page you can also change the compensation setting, create and edit patterns, and display all available patterns. To return to a previous page press EXIT. To return directly to the ready page press RESET.

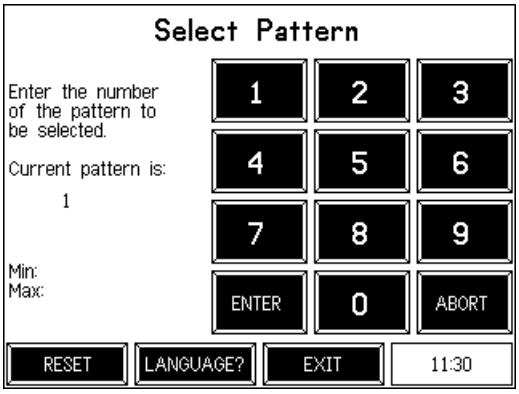

a.2. Creating a New pattern

From the READY page press ORDER SETUP, CONTINUOUS, CREATE/EDIT PATTERN.

Press DESCRIPTION button, using the keyboard, enter a name for the new pattern. (Spc is the blank space character) Press EXIT.

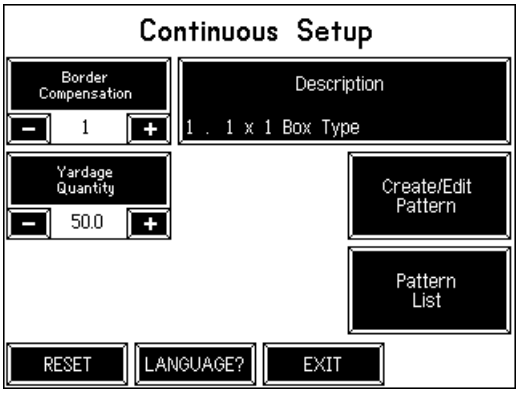

Press CREATE/EDIT PATTERN

Press PATTERN SETTINGS.

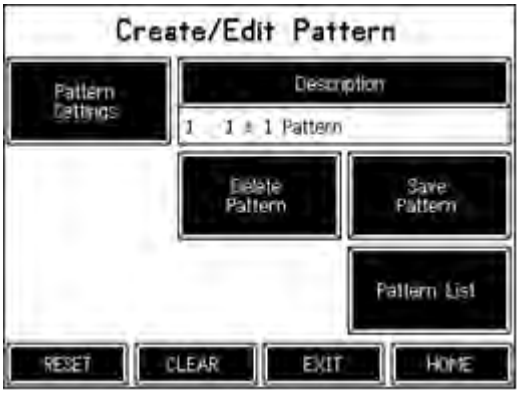

For rectangular patterns enter the desired left and right pattern lengths.
If a trapezoidal pattern is desired, also enter a CROSSFEED SPEED. A speed of "1" will make about a 5 degree angle on the cross feed sew. A "2" is about 9 degrees, and "3" about 13 degrees.
Cross feed speeds above "3" may require slowing down the sew carriage speed to maintain stitch length.
Carriage speed and other settings which can affect the pattern must be accessed through the TECHNICIAN'S page.
Leaving the EDGE FEED DISTANCES "0" and entering CROSSFEED SPEEDS only will result in a "V" shaped pattern.

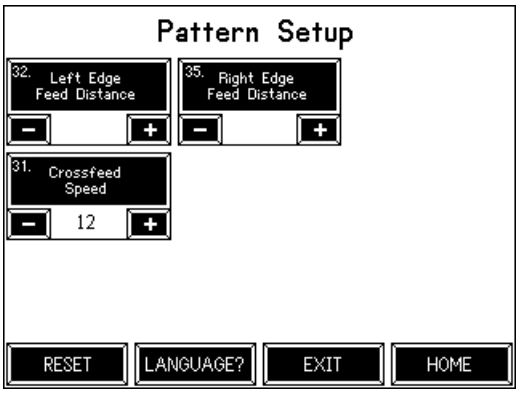

EXIT back to the CREATE/EDIT PATTERN page and press SAVE PATTERN. Enter the desired pattern number and press enter. Exit or RESET back to the READY page. The new pattern is displayed as the current pattern.

a.3. Continue Mode Parameters

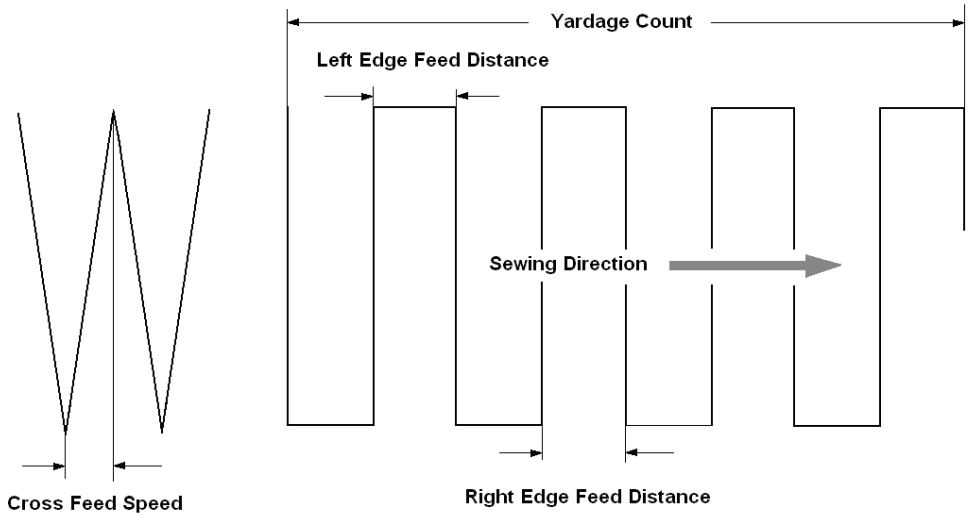

b. Border Mode

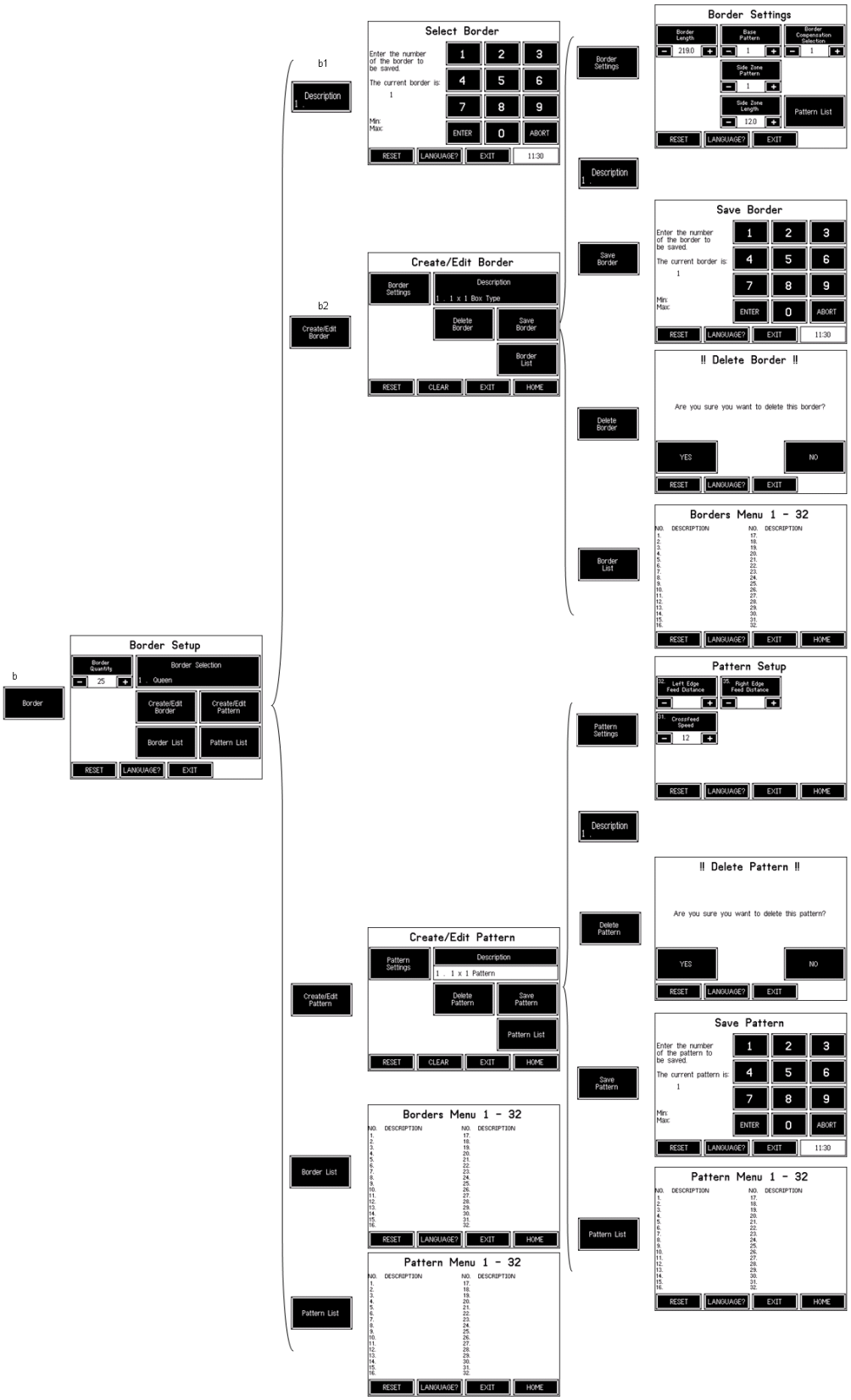

In BORDER MODE the machine runs a programmed border length with or without a different “Zoned” pattern in the center of the sides of the bed. Each border can have a length, a base pattern, a “Zone” pattern, a zone length, and a compensation.

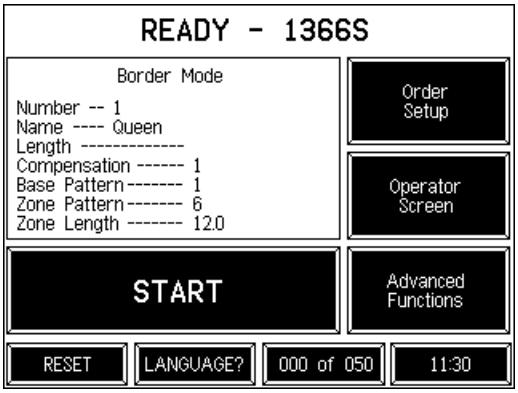

If the zone length is set to zero the base pattern only will be run. If the correct border is displayed, press START to make borders. On the border READY page the yardage counter is replaced by a piece counter showing the desired number of borders entered and the number of those completed. Pressing this counter button will take you to a reset page for the counter. To pause the machine PRESS TO PAUSE. The machine will finish the last pattern and stop on the left edge of the border.
To stop immediately, press the red E-stop button. Unless there is an emergency, you should always stop the machine with the PAUSE button so you do not mess up the pattern.

b.1. Change Border

From the READY page press ORDER SETUP.

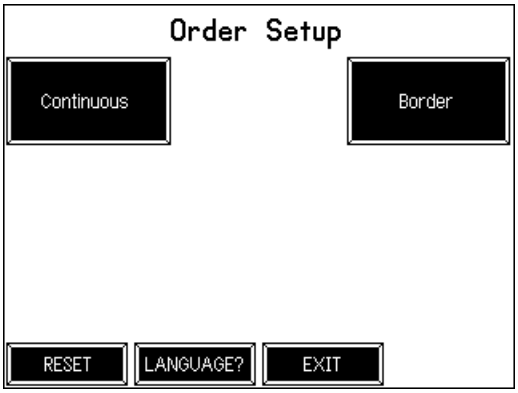

Press BORDER.

Press DESCRIPTION

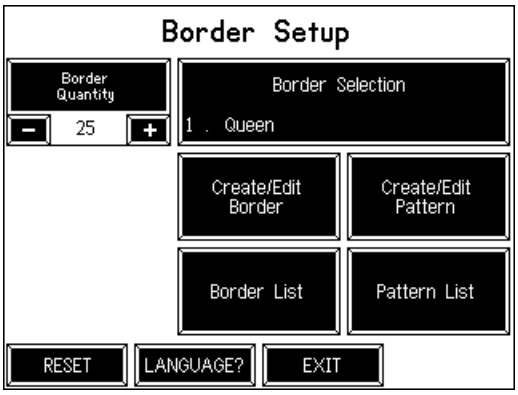

Enter the desired border number and press enter. EXIT or RESET back to the READY page.
Check the border settings including the desired quantity in the piece counter.
To change the required quantity, go back to the BORDER ORDER SETUP page. EXIT or RESET back to the READY page and reset the piece counter.

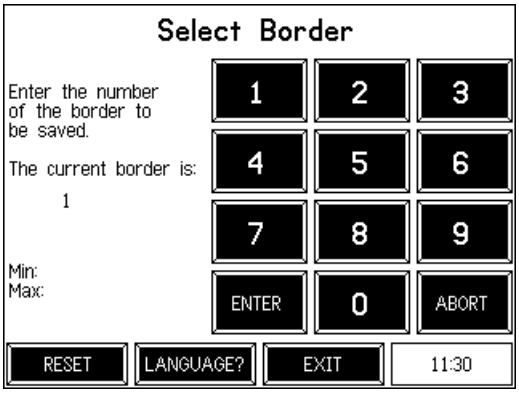

b.2. Creating a New Border

Go to the BORDER ORDER SETUP page and press CREATE/EDIT BORDER

Press DESCRIPTION and enter a name for the new border. Exit back to the CREATE/EDIT BORDER page and press BORDER SETTINGS.

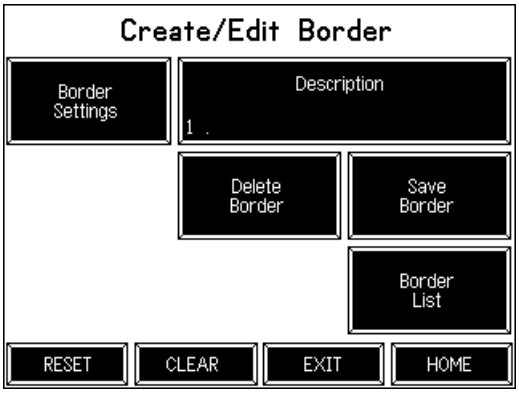

Here you can enter the border length (which includes the closing stitch margins at both ends), the base pattern, side zone pattern, side zone length (if set to zero there will not be a side zone), and compensation. EXIT back to CREATE/EDIT BORDER page and press SAVE BORDER.

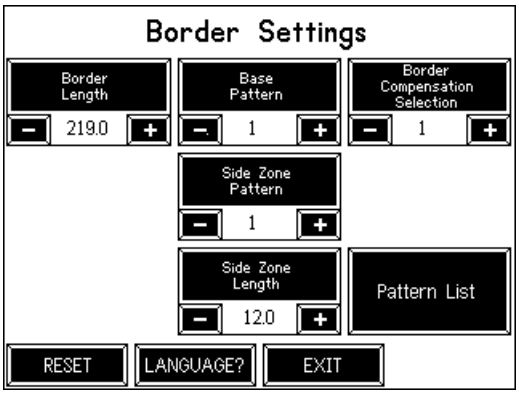

Enter the desired border number and press ENTER. EXIT or RESET back to the READY page. Check settings. The new border is displayed as the current border.

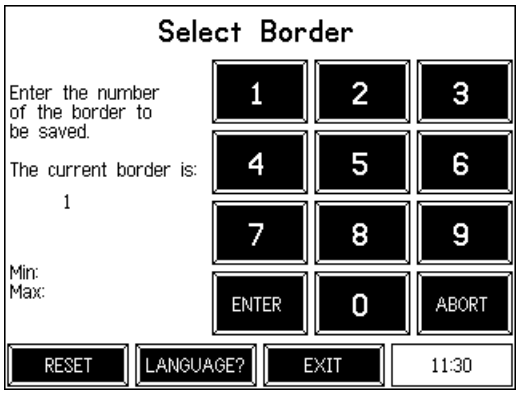

b.3. Border Mode Parameters

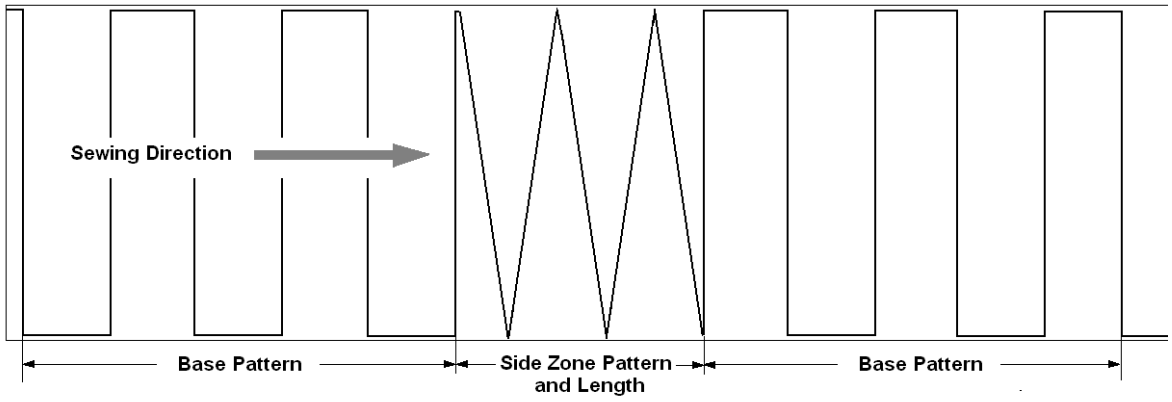

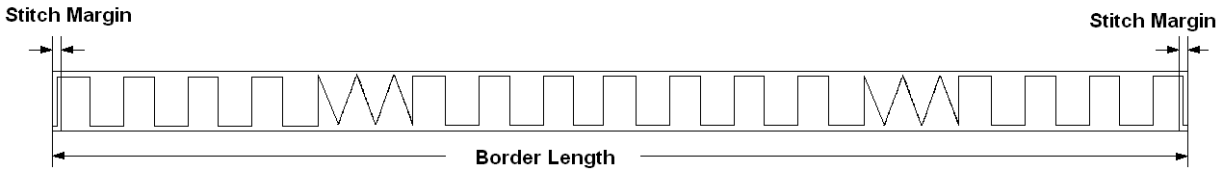

3. Operator Screen

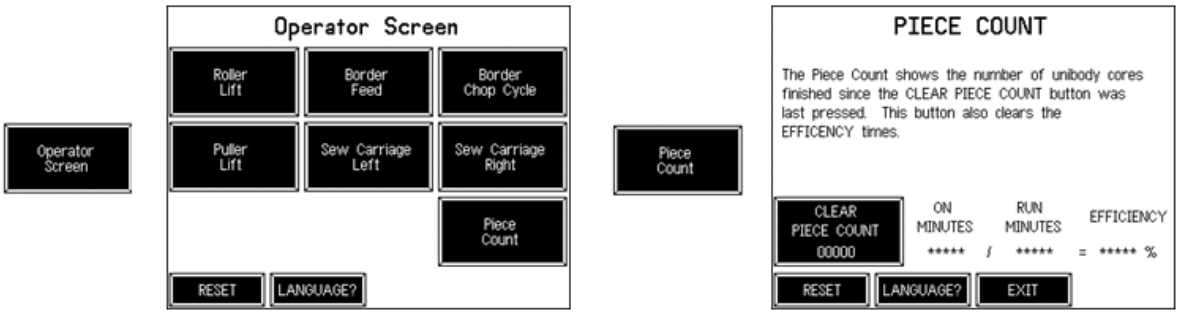

From the READY screen press OPERATOR SCREEN.

This provides access to helpful machine functions for the operator. From here you can open and close the puller and tension rollers, manually feed border thru the machine, jog the sewing head left and right without sewing, activate the border knife (chop cycle), and reset the piece counter (which counts the number of made BORDERS). The piece counter is displayed on the BORDER MODE ready screen and replaces the yardage counter. The piece counter screen also displays an efficiency monitor which compares the total “on” time of the machine to the actual “run” time. The piece counter reset also resets the efficiency monitor.

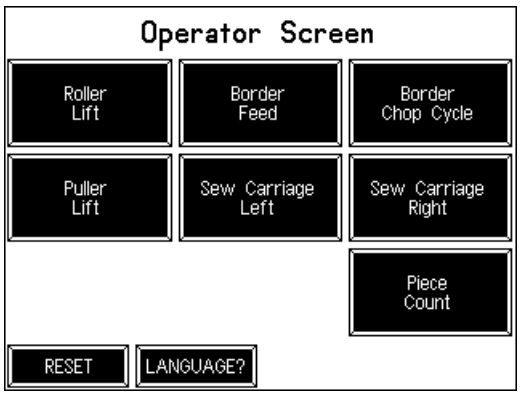

4. Yardage Count

On the READY CONTINUES MODE page the yardage counter is displayed as the third lower button from the left.

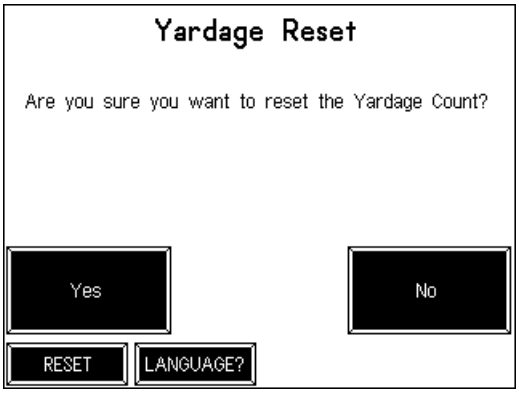

Pressing this button takes you to a screen for resetting the yardage counter. If the yardage counter is preset to "0", the machine will run continuously until the material runs out or you stop it with the PAUSE button.

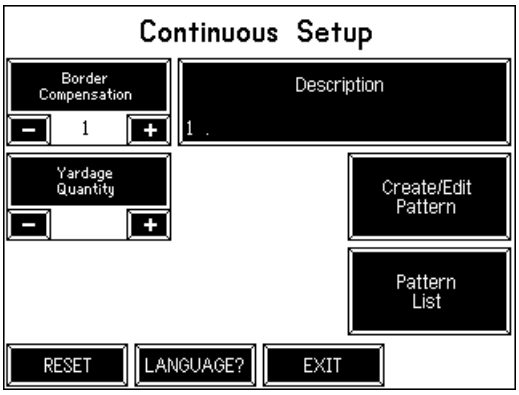

To preset the yardage counter press ORDER SETUP form the READY Screen, then CONTINUOUS. The yardage counter is displayed on the CONTINUOUS SETUP page.

Use the "+" and "-"buttons to change the count or press YARDAGE QUANTITY to go to a keyboard screen. On the keyboard screen enter the desired yardage and press enter.

5. Border Count

On the READY BORDER MODE page the Border counter is displayed as the third lower button from the left.

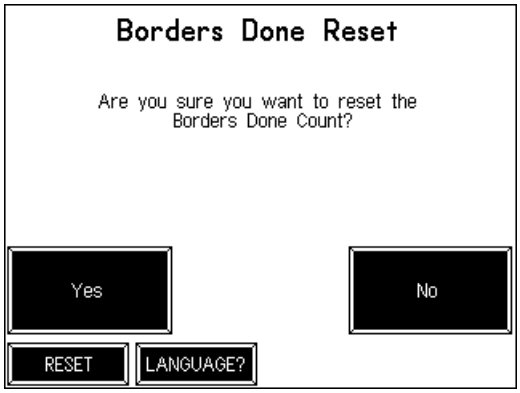

Pressing this button takes you to a screen for resetting **the** Border counter. If the Border counter is preset to "0", the machine will run continuously until the material runs out or you stop it with the PAUSE button.

6. Advance Functions

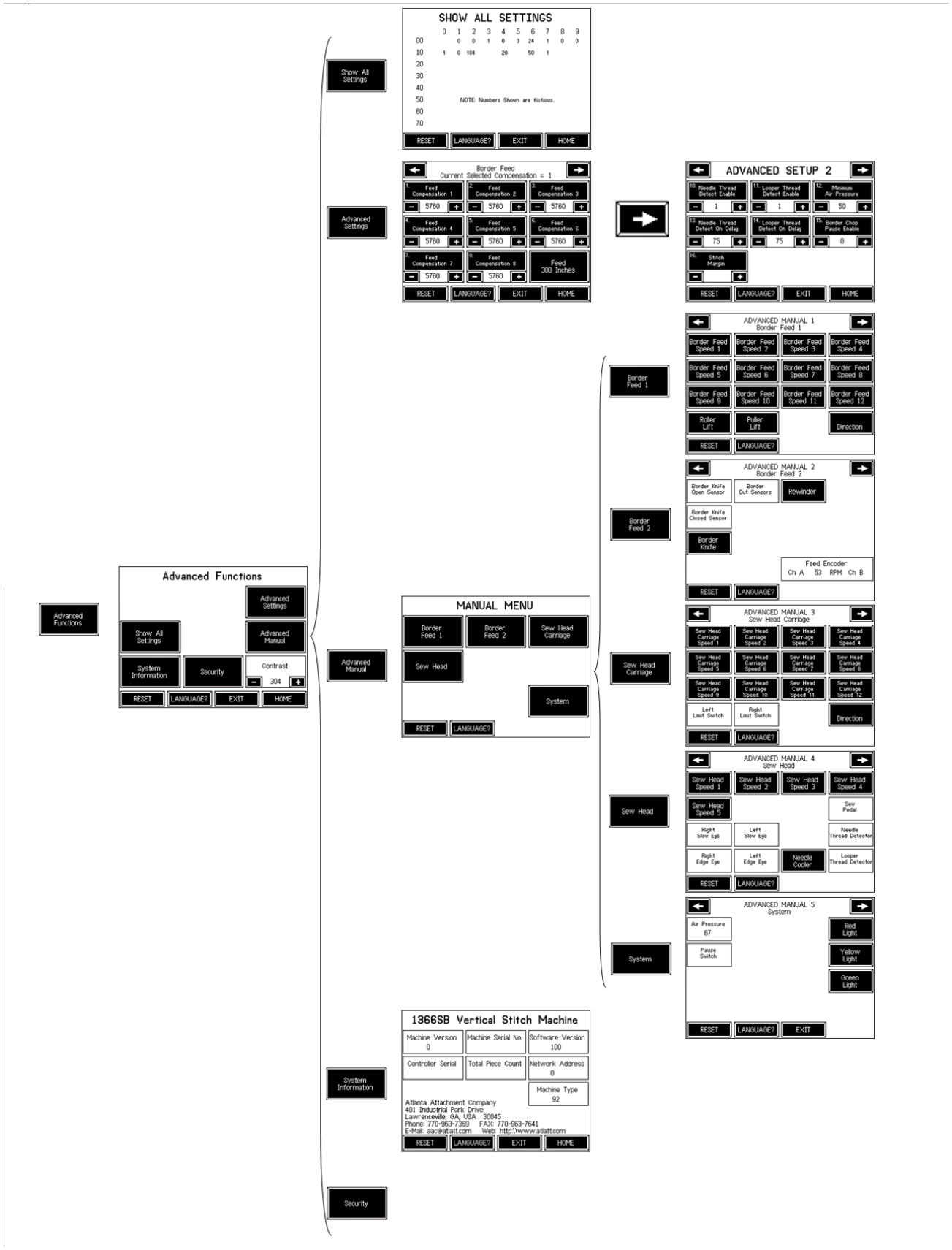

From the READY screen, the ADVANCED FUNCTIONS button takes you to pages for manually operating all machine functions, changing machine settings, and other advanced functions.

The advanced settings pages allow the setup and control of compensations, thread break detectors, border knife function, air pressure monitor, and closing stitch margin. These are universal settings and are not part of the pattern and or border setup. The FEED 300 INCHES button causes the machine to feed 300 inches of border without sewing so the compensations can be calibrated for different materials.
The CONTRAST button sets the contrast for the screen and can be adjusted as desired.

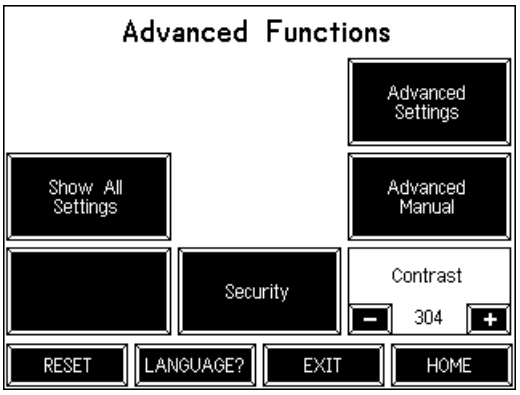

2.3. Changing the Needle

Please follow all safety procedures, turning the power off to the machine is recommended.

Locate the slotted needle screw, located on the left side of the needle chuck.

Insert a small flat blade screw drive through loosens the screw. Do not remove the screw. Remove the old needle.

Insert the new needle into the needle hole at the bottom of the needle chuck, push up until it stops. Turn the needle until the scarf of the needle is pointing to the back side. Tighten the needle screw. Needle: TVX7 110/18

Thread the new needle, should be from front to back.

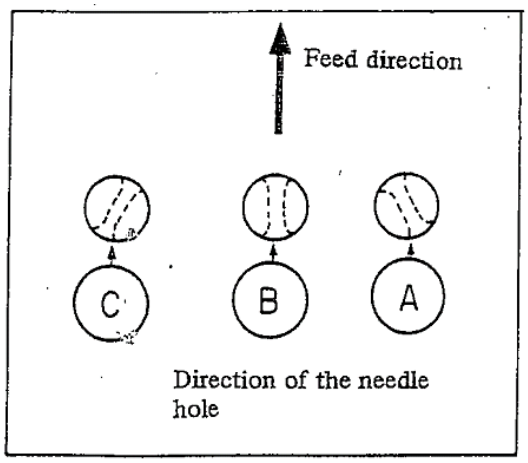

1. How to set the needle

Do not set the needle in direction “C” as illustrated or uneven stitches may be formed in the reverse feed. However, it is advisable to set the needle with such a slight inclination as “A” when using filament threads and “B” for cotton threads to prevent the stitches from skipping.

2.4. Threading

Please follow all safety procedures, turning off power is recommended.

Needle and Looper threads are located inside the right door.

Follow pictures for initial threading

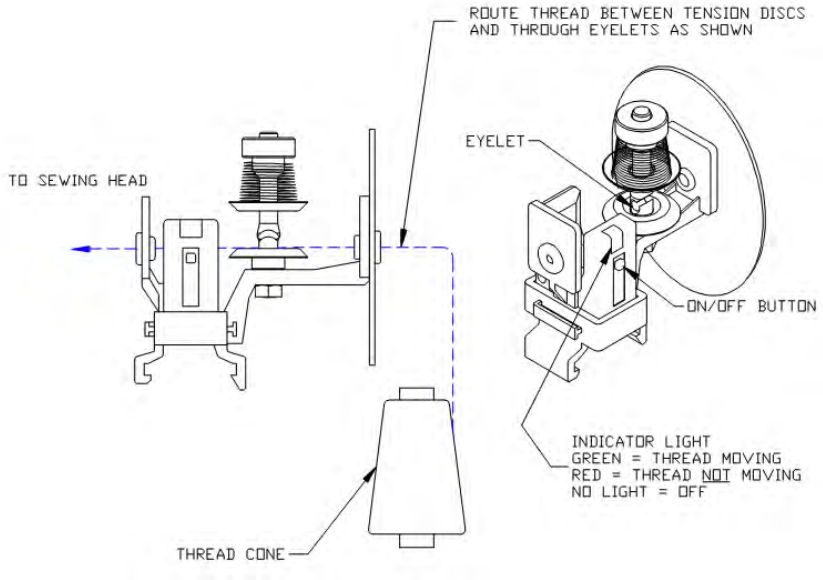

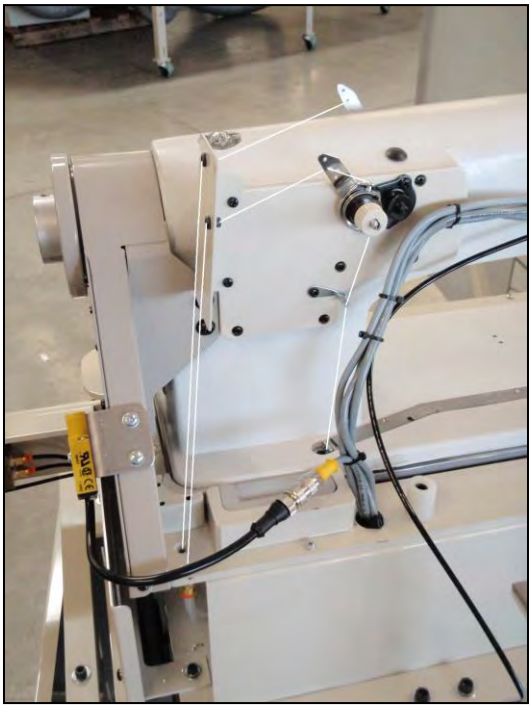

2.4.1. Needle

With the needle bar raised to its highest position, pass the thread in order as show in the picture
1. Pass the thread hole toward to opposite side of the operator from the operator side.
2. Pull out the thread which was passed through the needle about 10 cm (4”)

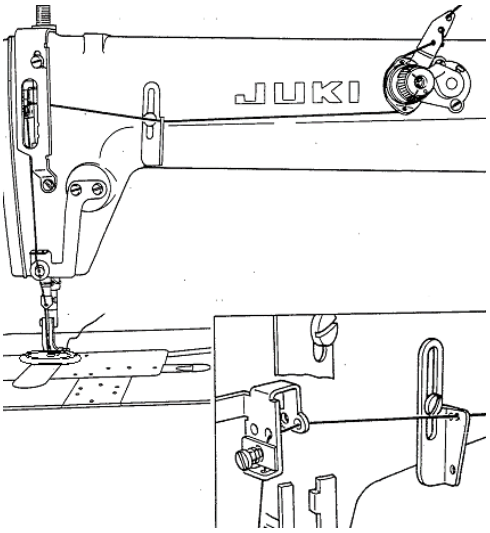

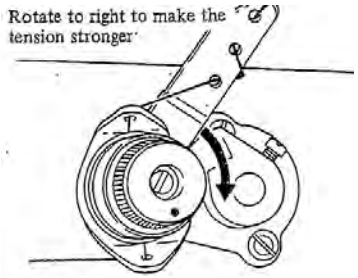

2.4.2. Looper

Pass the looper thread through the looper thread guide plate as illustrated below. When using a hard twisted thread or when sewing with a large feed pitch, pass it through 2 holes to form a loop. Sewing fine materials tend to pucker so pass the thread through only one hole in order to lessen the thread tension.

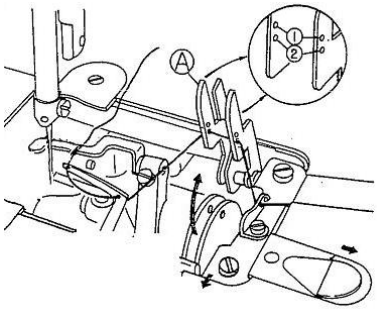

Pull the plate spring in the direction of arrows as shown in the figure, and the thread guide (A) will come up. As the close-up figure shows, the thread guide has too sets of threads holes; the holes (1) are used when a stitch is preferably formed with soft lopper thread tension, a stretchable thread is used or stitch length is more than 3mm (1/8”) and the holes (2) are used when a stitch having normal thread tension is preferred.

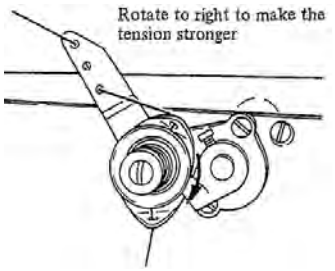

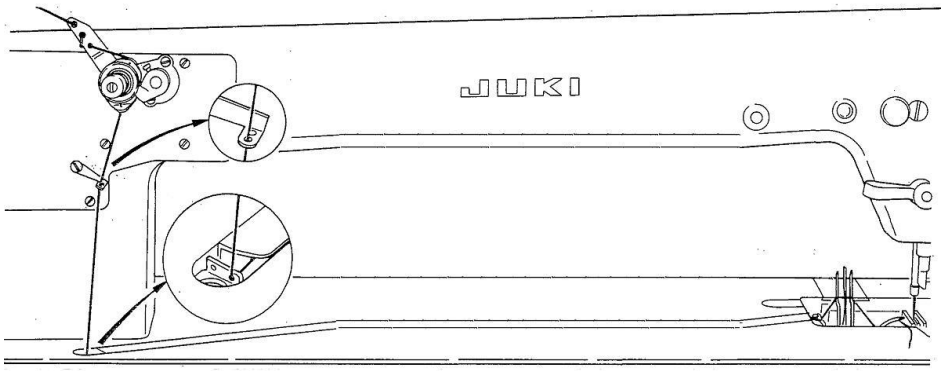

2.5. Loading Material

Please follow all safety procedures, turning off power is recommended.

Follow Pictures for details.

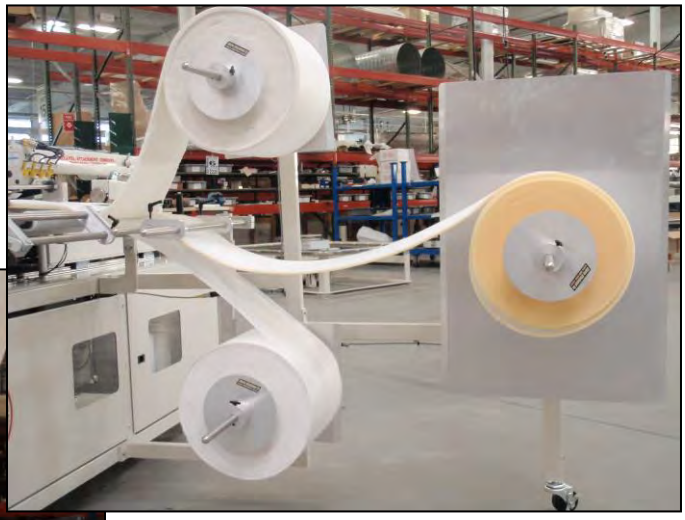

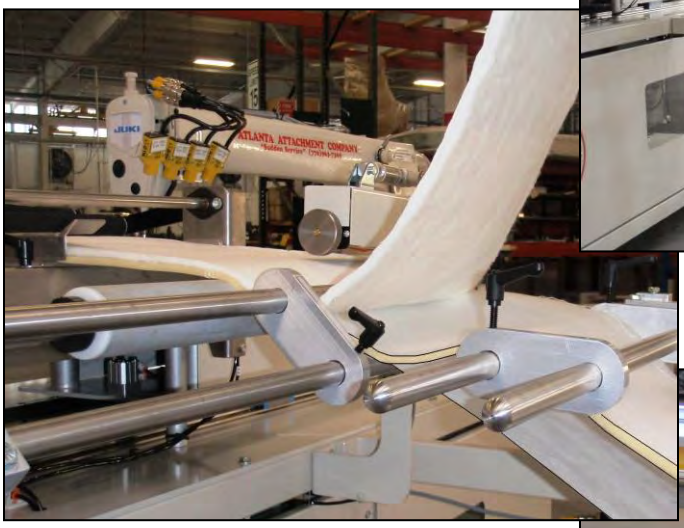

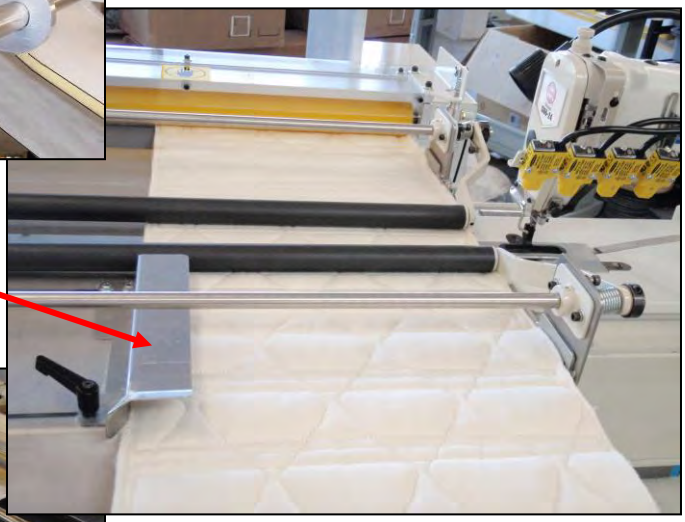

Re-adjust all guides to the corresponding width

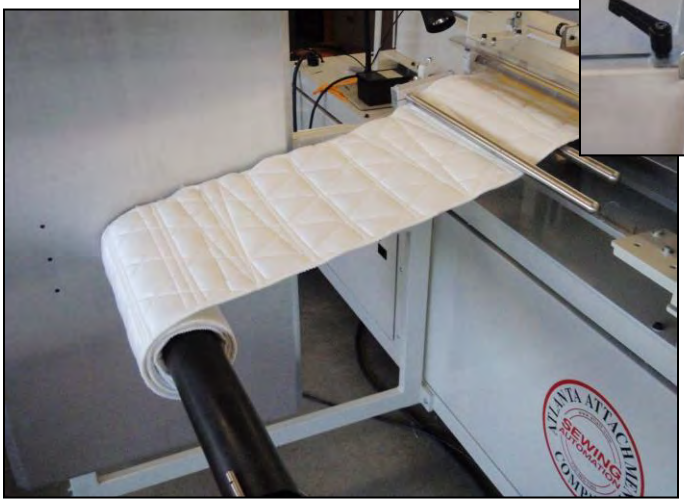

2.6. Sewing Procedure

Please follow all safety procedures, turning off power is recommended.

Check that the sewing head is locked into the carriage. Button on top of positioning handle “B” unlocks the head from the carriage. This allows the head to be pulled to the extreme right in order to tilt the head back for service.

Unlock

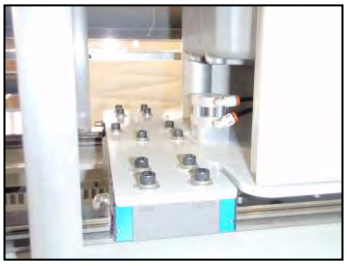

Lock

Check that the sewing head is threaded properly. (See Threading for details & Installation Set-up)
Check that the fabric is routed from the supply rolls, through the tension bars, under the small rollers, through the feed rollers and to the re-winder. (See Border Load
Press the green Power button to power up the machine.
At power up the “Slow stitch” screen is displayed.

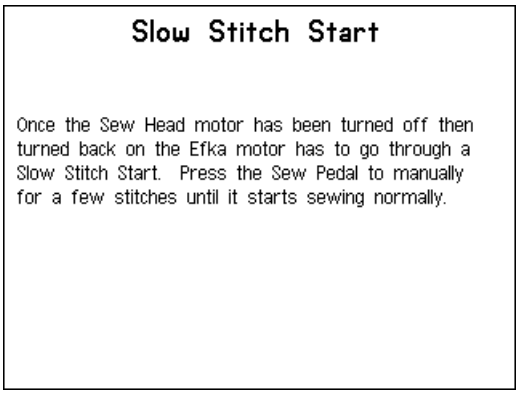

Step on the foot switch momentarily to sew a few stitches which prepare the sewing motor for automatic running.
Then the “READY” screen is displayed.

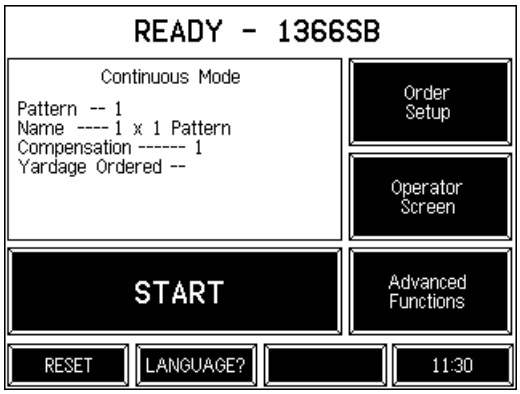

The READY screen shows the current status of the machine modes, either CONTINUOUS or BORDER. It also displays the current pattern selected, pattern name, compensation setting, and yardage ordered (continuous Mode) or piece counter (Border Mode). In CONTINUOUS mode the machine runs a continuous pattern with the option to preset the number of yards to make. In BORDER MODE the machine runs a programmed border length with or without a different "Zoned" pattern in the center of the sides of the bed. Each border can have a length, a base pattern, a "Zone" pattern, a zone length, and a compensation.

Check that the fabric is under the sewing foot and that no more than two sewing eyes are flashing. Use the Left Carr and Right Carr arrow buttons on the control panel to reposition the head as need.

Using the order Set-up on the panel, select the desired Mode, Pattern and yardage to be produce

If desired, reset the yardage counter on the control panel to keep record of material being sew.

Press the START button on the control panel to start sewing the selected order

Error conditions will cause the machine to stop. The control panel will display the solutions.

Unless there is an emergency, you should always stop the machine with the PAUSE button so you do not mess up the pattern. To stop immediately, press the red E-stop button.

2.6. Maintenance

Daily (8 -10 hrs. of operation)

• Clean the machine at the end of every shift or as excess materials accumulate. Clean lint, waste, etc. from the sewing, loopers and needle, area as it accumulates, remove or open covers as necessary for access. Remove any threads or other material(s) wrapped around or between any moving parts.

• Investigate and report any unusual noises to the proper personnel.

• Open or remove doors and/or covers and inspect belt(s) for debris or wear and clean or replace as necessary.

• Check for proper oil level and/or flow in the sewing head and other oil filled or lubed equipment, fill as needed. Oil all points as indicated.

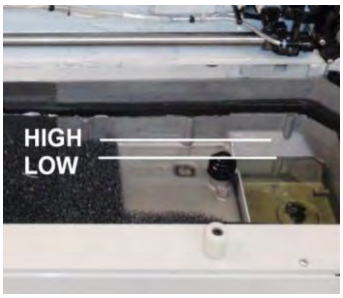

• Wipe all photocell lenses with a clean non-abrasive dry cloth.

• Use a soft cloth for cleaning the Reflective Tape. Do not use chemicals or abrasives to clean it. Avoid any contact with oils and liquids. Do not touch the tape with bare fingers. If tape is dirty or opaque, the eye may not function correctly.

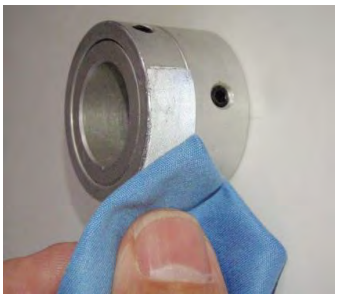

• Monitor the main air pressure filter/regulator “B” and empty as necessary.

3.-TECHNICAL MANUAL

All maintenance should be performed by a qualified service technician.

3.1. Sewing Head Adjustments

3.1.1. Adjusting the needle height of the needle bar

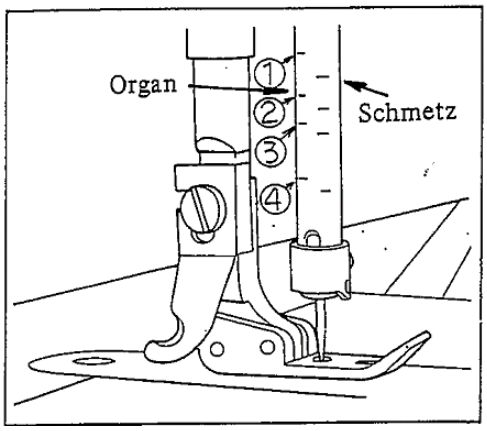

Needle System TVx7: Set the needle bar so that when the needle bar has reached to lower dead point the left carved line (No 1 market) matches with the bottom surface of the needle bar lower bushing. (See figure)
Needle System UY-128GAS etc.: Set the needle bar so that when the needle bar has reached to lower dead point the right carved line matches with the bottom surface of the needle bar lower bushing. AT this condition the distance between the needle point an upper surface of the throat plate becomes 10.0 mm (25/64)

3.1.2. Matching the needle and the looper

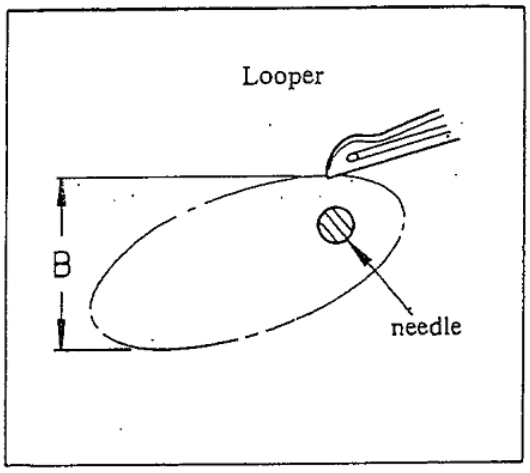

Adjusting the looper avoid motion.
Within the oval of the looper the dimension of B in the figure can be adjusted in the following order.

Remove the rubber cap.
Rotate the hand wheel with the hand.
The heads of the plated adjusting screw (1), flat top screw, and clamp screw will appear in that order, so at first, loosen the 2 screws, flat top and clamp screw.
If the punched mark of the adjusting screw (1) is brought to right side, the dimension of B becomes bigger.
Adjustment is made depending on the size number of the needle but normally it is adjusted to #11 needle.
The adjustment should be made so that the looper goes as near the needle side as possible and returns. Then, after setting the position by tightening the flat top screw, securely tighten the clamp screw.

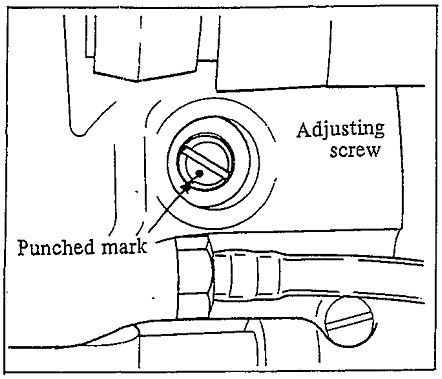

3.1.3. Matching the looper

When the needle is at the lowest point, the looper comes to extreme right position. This adjustment is made by loosening the screw of the gear.

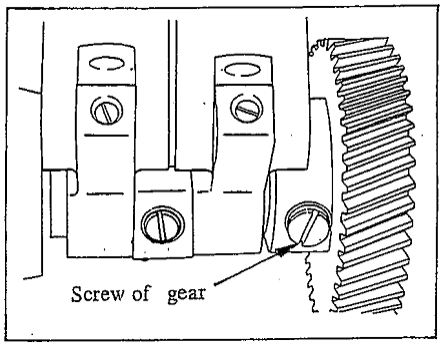

3.1.4. Scooping amount of the looper

When the blade point of the looper has reached the center of the needle, the standard distance between the blade point and the upper end of the needle hole is 1.5 mm (1/16). When the No 2 carved line of the needle bar is matched with the lower edge of the needle bar lower bushing Adjust that the blade point of the looper comes to the center of the needle. The returning amount of the looper comes approximately 3.2 mm (1/8) and the relative relationship of the needle hole and the thread hole of the looper becomes as show in the figure.

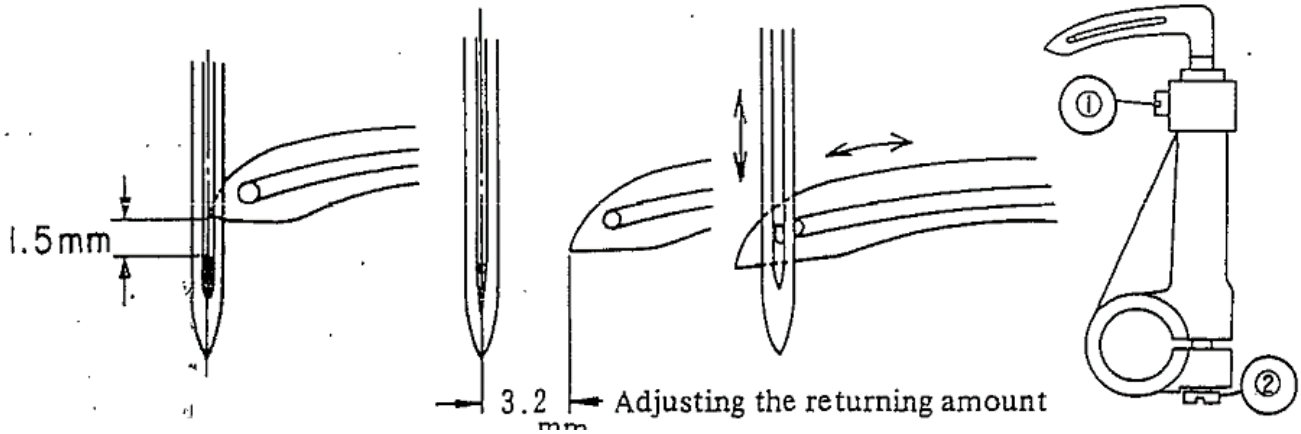

1. Clearance between the looper and the needle

The clearance between the looper and the needle, when the looper scoops up the thread, should be as narrow as possible. After adjusting the needle guard, re-confirm this condition

3.1.5. The timing of the needle guard

The timing of the needle guard is determined by matching the first screw of the figure with the flat part of the shaft.

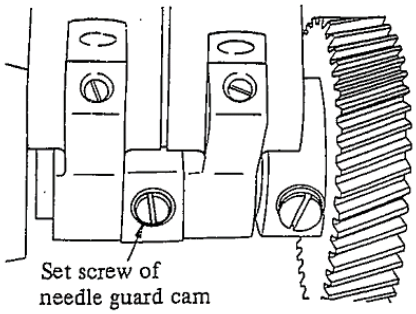

3.1.6. Position of the needle guard

When the looper scoops up the needle thread; adjust so that the needle point lightly touches the needle guard. Set the height as high as possible to about cover the needle thread loop. Loosen screws (1) and (2) for this adjustment.

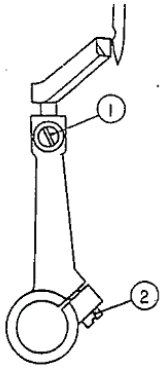

set

3.1.7. Thread spreader

Thread spreader is necessary in case of reverse sewing and at the same time it is very important to obtain stable stitches without skip-stitching in case of normal feed sewing.

1. The timing of thread spreader against the needle

As shown in the figure, when the No. 4 mark of the needle bar appears from the bottom of the needle bar lower bushing, set the thread spreader with the thread spreader cam set screw, as shown the figure, so that the thread spreader comes to extreme right end.

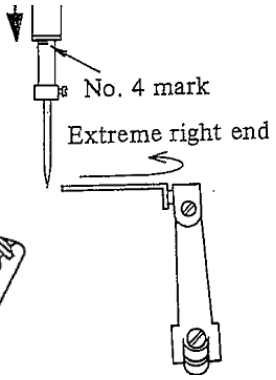

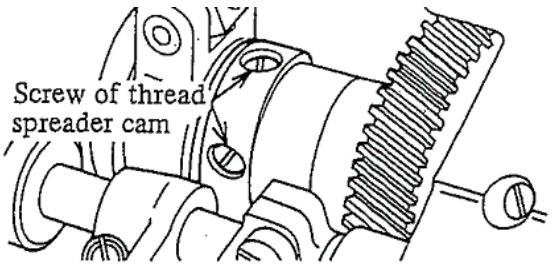

in

2. Position of the thread spreader latch

When the pointed end of the descending needle arrives at the level of upper surface of the looper, adjust the thread spreader to the position shown by the figure.

The right and left direction should be such that the inside surface of the thread spreader should be 1mm right of the needle.
Adjust so that the front and back dimension A should be 0.5 mm (1/64") with the screw (2)

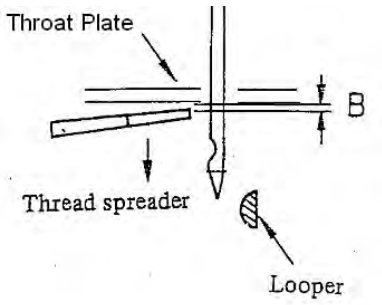

The distance "B" should be adjusted as close as possible without rubbing the throat plate, Adjust with the screw (2).

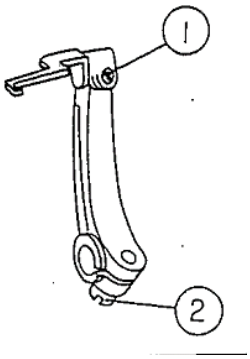

3.1.8. Method of thread spreader

When the thread spreader latch returns, the tip of the thread spreader latch is positively grasping the looper thread and both side of the needle thread loop until the needle point enters the triangle of the thread. You must pull threads to left, with throat plate installed to see adjustment.
After the needle point has entered the triangle, the spreader should release the threads.

Above are the thread spreader adjustments for both normal and reverse stitches to form correct stitches.

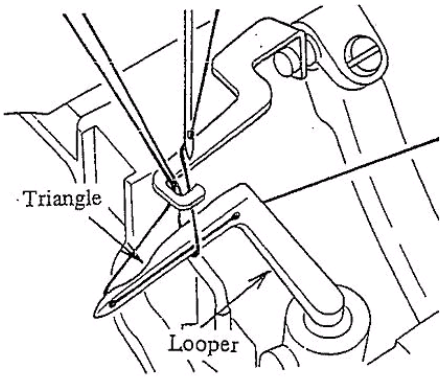

1. On looAntes, per thread cam

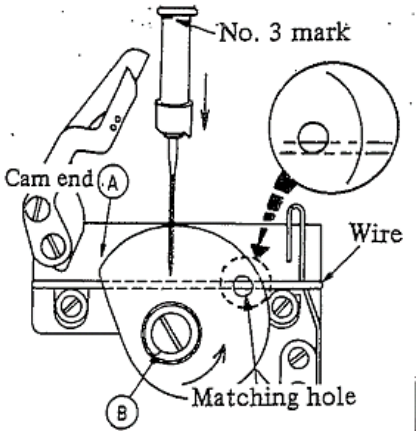

As shown in the figure, when the No. 3 carved line of the needle bar comes to the bottom surface of the needle bar lower bushing, make it so that the wire can be seen through the hole of the matching hole of the cam. The timing of the looper thread cam can be adjusted by loosening the screw B and after the position is determined tighten the screw securely.
After all adjustments are completed, verify the following:

Verify that when the looper thread came off from the protruded end (A) of the looper thread cam, the needle point has completely entered the triangle of the looper thread.
To especially avoid the puckering, adjust the looper cam so that the bottom end of its matching hole is aligned with the lower side of the wire with a little earlier timing, when the looper thread will not be drawn too much and a favorable thread tension will be obtained.

2. On the position of the take-up thread tension lever

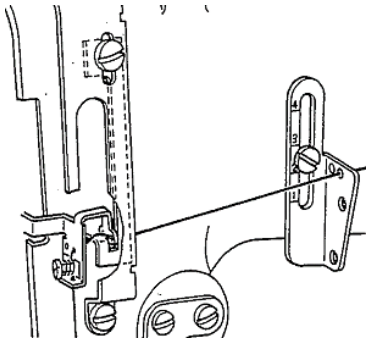

When the needle bar is at the lowest point, if the needle thread is pulled in by hauling motion by the take-up thread tension lever, the needle thread loop becomes big at the scooping time of the needle thread.
In case of normal fine thread, lower the needle to the lowest dead point.

3. On the frame thread eyelet

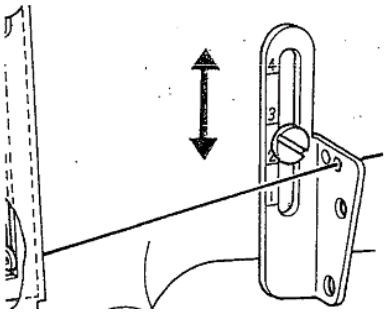

The thread tightening changes according to the positions of the frame thread eyelet. When the frame thread eyelet is lowered, the tightening of the looper thread becomes weaker and if it's raised up, the tightening becomes stronger.

4. Function of the thread take-up tension plate

The thread take-up tension plate, which moves with the needle bar, prevents the needle thread from forming unnecessary loop in the opposite side of the looper when the needle bar goes up to its highest position to form the needle thread loop to be hooked by the looper. By so doing, there is not possibility that the thread loop grows up excessively by drawing in such unnecessary loop through the needle eye (A large loop is undesirable to form uniform stitch). Therefore, the tension plate must apply the lowest tension to the thread only for surpassing the resistance produced between the thread and the cloth.
Function of the take-up thread tension disc

5. Function of the thread take-up tension disc

The take-up thread tension disc functions especially for preventing the stitches from skipping during reverse stitching and production of chain-off threads.

It is very important to pull in the slack of the needle thread especially when the feed direction is reversed. If a slackened needle thread remains on the cloth, it may be cut by the returning needle or it may form an idle loop which results in stitch skipping. Another function of the take-up thread tension disc is to take in the slack of the needle thread while the needle goes down in order to prevent the chain-off threads from skipping. The needle thread is entirely free from the resistance of the cloth when the chain-off threads are formed. Therefore, when the needle point comes down to pass through a triangular loop formed on the back of the looper, the triangular loop will be deformed or broken to skip a stitch of the interloping needle thread is slackened.

6. Relation thread take-up tension plate / take-up thread tension disc.

To let these two thread components properly function, it is necessary to maintain the tension of than that of the standard ratio is 3 g: 1 g (drawing force required for the cotton thread. No. 60).

3.2. Pneumatic

3.2.1. Winder Clutch Regulator (A)

The winder clutch regulator is inside on the right side of the machine. There are tree regulators behind the door; the winder clutch regulator is the one on the top (A).

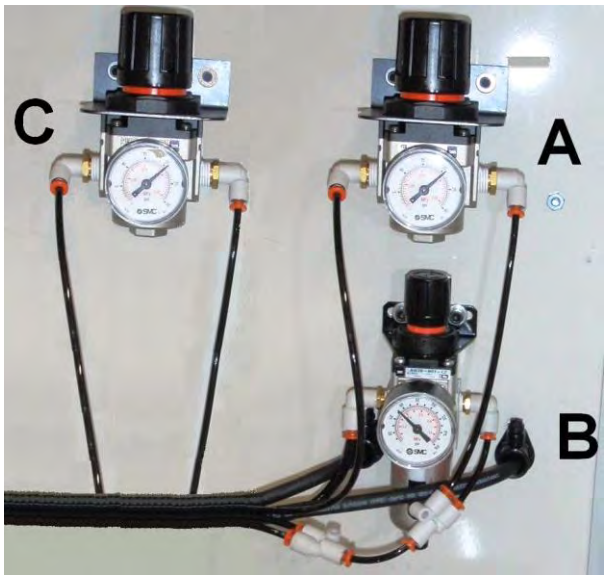

Its controls the amount of winding tension used to wind the fabric after being sewn. Increasing the air pressure supplied by the winder clutch regulator results in a more tightly wound roll of fabric. **Pre-set factory pressure: 20 Psi.**

3.2.2. Main Air pressure (B)

The purpose of the regulator is to keep the operating pressure of the system (secondary pressure) virtually constant regardless of fluctuations in the line pressure (primary pressure) and the air consumption. **Pre-set factory pressure: 20 Psi.**

3.2.3. Roller pressure (C)

Its controls the amount of the roller tension used to hold the material down while sewing. Increasing the air pressure supplied by roller regulator; results in a better control of the fabric by sewing. **Pre-set factory pressure: 20 Psi.**

Clean air in your compressed air system is essential for the safe and efficient operation of this reliable power source. Harmful contaminants like oil, dust, dirt, rust, and water-alone or in combination-can attack your system and clog sensitive pneumatic instruments. It can also reduce the efficiency of air-operated tools. Wear out seals and erode system components. Increase maintenance and repair costs. Contribute to product rejects, production downtime-even complete plant shutdown.

The regulator assembly is located behind the table. The regulator “B” is for the main air pressure, **Pre-set factory pressure: 80 Psi.**

3.3. Electrical

It is important that the machine technician read this manual and is familiar with all the functions and safety concerns of the unit before operating.

3.3.1. Main Power Switch

The main power On/Off switch is on the back of the machine. It is used to turn the power on to the whole machine. This machine requires 220V Single Phase 15 Amps. If you have problems with the power not coming on when the "ON" button is pressed you may check this switch by doing the following.

ATTENTION. Make sure that the machine is unplugged before proceeding and that all lock out/tag out procedures have been correctly followed **(See to Lockout tag out procedure)**

- Check the circuit breakers if any of the breakers stripped due to overload.
- Replace the cover, plug the machine in, and try turning the machine back on.
- If the contact still trips the overload, then there is a problem either with the wiring or the contactor.
- Use the wiring diagram for your machine loaded in the parts manual to check the voltages.

Try replacing the circuit breaker.

3.3.2. Hand wheel Eye (Part # FFSM312VQ)

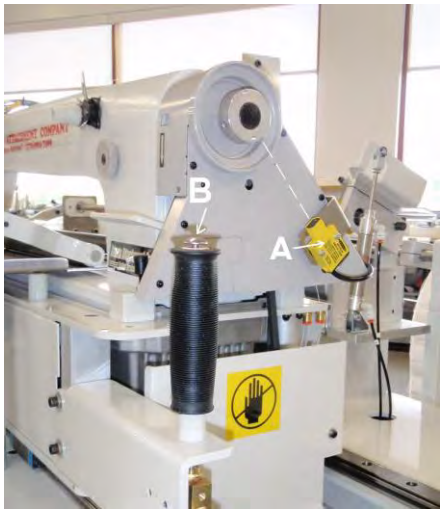

The Hand wheel eye (A) is mounted on the right side of the machine The Hand wheel eye reads a piece of reflective tape located on the pulley disks (See line).
The Hand wheel eye is responsible for reporting to the Efka motor that the sewing head is sewing at the set RPM, stitch counting for all counters, and for needle position when stopping.

1. Reflective Tape Maintenance (Part # EEFE-RR2)

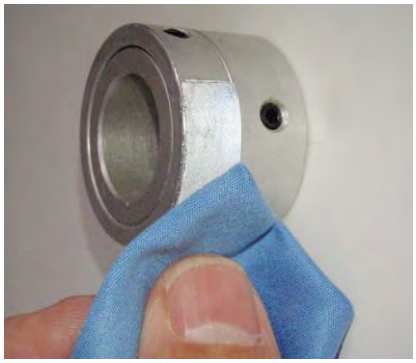

Use a soft cloth for cleaning. Do not use chemicals or abrasives to clean it. Avoid any contact with oils and liquids. Do not touch the tape with bare fingers. If tape is dirty or opaque, the eye may not function correctly.

3.3.3. Sewing Head Sensors Eye (Part # FFSM312VQ)

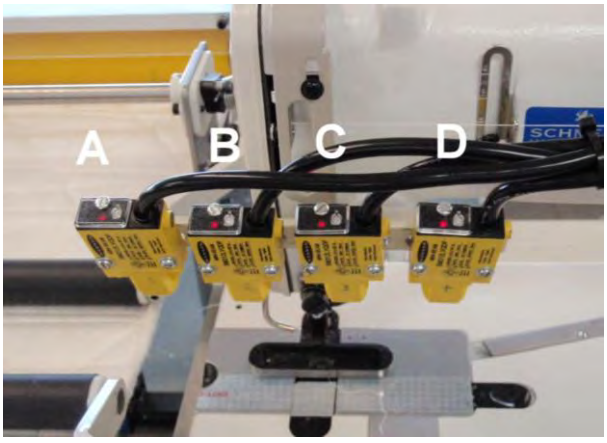

A. Speed Reducer. From High to Low speed Left Edge.

B. Left Edge detector.

C. Right Edge detector.

D. Speed reducer. From Height to slow speed. Right Edge.

3.3.4. Eye Sensor Adjustment (Part # FFSM312VQ)

- Remove the clear plastic cover from the end of the sensor. There are two adjusting screws under the cover. One is labeled “GAIN” and is used to set the sensitivity of the sensor. The other screw is labeled “DO & LO” and should always be fully clockwise.
- With the end of the sensor pointing at the center of the reflective tape, turn the “GAIN” screw counter-clockwise until the red LED indicator is off
- Then turn the “GAIN” screw clockwise until the LED indicator comes on.
- Then turn the “GAIN” screw one full turn clockwise. The LED indicator should be blinking slowly.
- Cover the eye so that the sensor cannot see the reflective tape and the LED should go off.

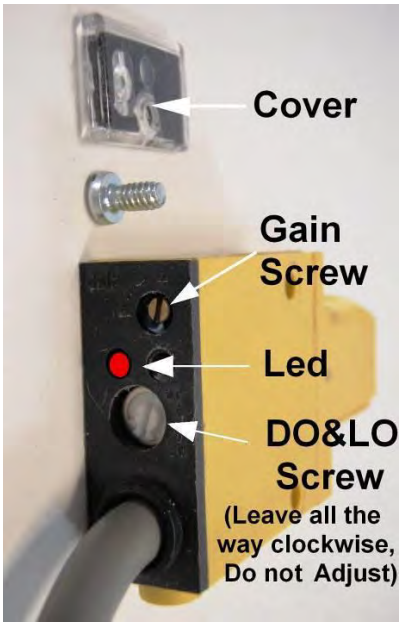

3.3.5. Limits Switches

There are 2 Limits switches on the machine
They limit the maximal stroke of the sewing head on both directions to avoid any crash against mechanical parts.

3.3.6. Fabric Sensor (Part # FFRK44T-4)

Located on the roll holder; when the fabric has been depleted, the fabric sensor will stop the machine.

3.4. Efka Motor

3.4.1. Parameter List

Carriage

Before Programming, Perform a Master Reset of Parameters (See Below)

PARAMETER	RANGE	VALUE	DESCRIPTION
290		0	**Mode of operation. MUST SET THIS PARAMETER FIRST!**
110	70-390	200	Positon speed
111	200-9900 rpm	500	Maximum speed when "129" is 0, 1, or 2. (360in/min)
119	1-3	1	Linear acceleration
220	1-55	3	Acceleration
240	Jan-70	55	Reverse rotation
161	0-1	0=CW	Motor rotation
270	0-5	5	External handwheel sensor configuration.
271	0-255	180	Needle Down Position
272	020-255	100	Drive ratio between motor pulley and handwheel pulley. If handwheel pulley is smaller than motor pulley, increase this value to slow down sewing head until measured speed matches speed set with parameter 111. (For Yamato and Pegasus, setting should be 100; for Rimoldi, setting should be 124)
436		0	Use code "5913". This disables an input that was causing box to reset itself.

Front panel LED's:

LED 1: Off
LED 2: Off
LED 3: Off
LED 4: Off
LED 5: Off
LED 6: Off
LED 7: Off, Stop at needle down.
LED 8: On, Stop at needle up.

Programming Instructions:

1. Power on holding down the "P" button till "COD" is displayed.
2. Press ">>" once and enter the number "311" (3112)
3. Press "E" once and "2.0.0." is displayed this is a parameter
4. Proceed to the parameter to be changed and press "E"
5. The value now shows in the screen, adjust to desired value.
6. Press "E" to enter value and continue with parameter setting.
7. Repeat for other parameters, press "P" once when complete.
8. Run sewing head to save parameters before powering down

To Perform Master Reset of Parameters:

1. Power on holding down the "P" button till "COD" is displayed.
2. Press ">>" once and enter the number "591" (5913)
3. Press "E" twice and "093" is displayed.
4. Press "+" once, "094" is displayed.
5. Press "P" to exit programming mode with all default values.

To force the saving of parameters:
Go to par 401, change from 0-1, enter.

Puller

Before Programming, Perform a Master Reset of Parameters (See Below)

PARAMETER	RANGE	VALUE	DESCRIPTION
290		0	**Mode of operation. MUST SET THIS PARAMETER FIRST!**
110	70-390	70	Positon speed
111	200-9900 rpm	900	Maximum speed when "129" is 0, 1, or 2. (37.5 RPM @ ROLLER)
119	1-3	1	Linear acceleration
161	0-1	1=CCW	Motor rotation
240	0-88	55	Direction, IN1
270	0-5	5	External handwheel sensor configuration.
271	0-255	180	Needle Down Position
272	020-255	100	Drive ratio between motor pulley and handwheel pulley. If handwheel pulley is smaller than motor pulley, increase this value to slow down sewing head until measured speed matches speed set with parameter 111. (For Yamato and Pegasus, setting should be 100; for Rimoldi, setting should be 124)
436		0	Use code "5913". This disables an input that was causing box to reset itself.

Front panel LED's:

LED 1: Off
LED 2: Off
LED 3: Off
LED 4: Off
LED 5: Off
LED 6: Off
LED 7: Off, Stop at needle down.
LED 8: On, Stop at needle up.

Programming Instructions:

1. Power on holding down the "P" button till "COD" is displayed.
2. Press ">>" once and enter the number "311" (3112)
3. Press "E" once and "2.0.0." is displayed this is a parameter
4. Proceed to the parameter to be changed and press "E"
5. The value now shows in the screen, adjust to desired value.
6. Press "E" to enter value and continue with parameter setting.
7. Repeat for other parameters, press "P" once when complete.
8. Run sewing head to save parameters before powering down

To Perform Master Reset of Parameters:

1. Power on holding down the "P" button till "COD" is displayed.
2. Press ">>" once and enter the number "591" (5913)
3. Press "E" twice and "093" is displayed.
4. Press "+" once, "094" is displayed.
5. Press "P" to exit programming mode with all default values.

To force the saving of parameters:
Go to par 401, change from 0-1, enter.

Sewing Head

Before Programming, Perform a Master Reset of Parameters (See Below)

PARAMETER	RANGE	VALUE	DESCRIPTION
290		5	**Mode of operation. MUST SET THIS PARAMETER FIRST!**
110	70-390	200	Positon speed
111	200-9900 rpm	2600	Maximum speed when "129" is 0, 1, or 2.
119	1-3	1	Linear acceleration
161	0-1	1=ccw	Motor rotation
270	0-5	1	External handwheel sensor configuration.
271	0-255	180	Needle Down Position
272	020-255	100	Drive ratio between motor pulley and handwheel pulley. If handwheel pulley is smaller than motor pulley, increase this value to slow down sewing head until measured speed matches speed set with parameter 111. (For Yamato and Pegasus, setting should be 100; for Rimoldi, setting should be 124)
436		0	Use code "5913". This disables an input that was causing box to reset itself.

Front panel LED's:

LED 1: Off
LED 2: Off
LED 3: Off
LED 4: Off
LED 5: Off
LED 6: Off
LED 7: Off, Stop at needle down.
LED 8: On, Stop at needle up.

Programming Instructions:

1. Power on holding down the "P" button till "COD" is displayed.
2. Press ">>" once and enter the number "311" (3112)
3. Press "E" once and "2.0.0." is displayed this is a parameter
4. Proceed to the parameter to be changed and press "E"
5. The value now shows in the screen, adjust to desired value.
6. Press "E" to enter value and continue with parameter setting.
7. Repeat for other parameters, press "P" once when complete.
8. Run sewing head to save parameters before powering down

To Perform Master Reset of Parameters:

1. Power on holding down the "P" button till "COD" is displayed.
2. Press ">>" once and enter the number "591" (5913)
3. Press "E" twice and "093" is displayed.
4. Press "+" once, "094" is displayed.
5. Press "P" to exit programming mode with all default values.

To force the saving of parameters:
Go to par 401, change from 0-1, enter.

3.4.2. Efka Box Error Codes

General Information			
On the control	**On the V810**	**On the V820**	**Signification**
A1	InF A1	InF A1	Pedal not in neutral position, when turning the machine on
A2	-StoP- blinking	-StoP- blinking + symbol display	Machine run blockage
A3	InF A3	InF A3	Reference position is not set
A6	InF A6	InF A6	Light barrier monitoring
A7	Symbol blinking	Symbol blinking	Bobbin thread monitor

Programming Functions and Values (Parameters)			
On the control	**On the V810**	**On the V820**	**Signification**
Returns to 000 or to last parameter number	Returns to 0000 or to last parameter number	Like V810 + display InFo F1	Wrong code number or parameter number input

Serious Condition			
On the control	**On the V810**	**On the V820**	**Signification**
E1	InF E1	InF E1	The external pulse encoder e.g. IPG... is defective or not connected.
E2	InF E2	InF E2	Line voltage too low, or time between power off and power on too short.
E3	InF E3	InF E3	Machine blocked or does not reach the desired speed.
E4	InF E4	InF E4	Control disturbed by deficient grounding or loose contact.
E9	InF E9	InF E9	EEPROM defective.

Hardware Disturbance			
On the control	**On the V810**	**On the V820**	**Signification**
H1	InF H1	InF H1	Commutation transmitter cord or frequency converter disturbed.
H2	InF H2	InF H2	Processor disturbed

3.4.3. Flow Chart EFKA Error E1

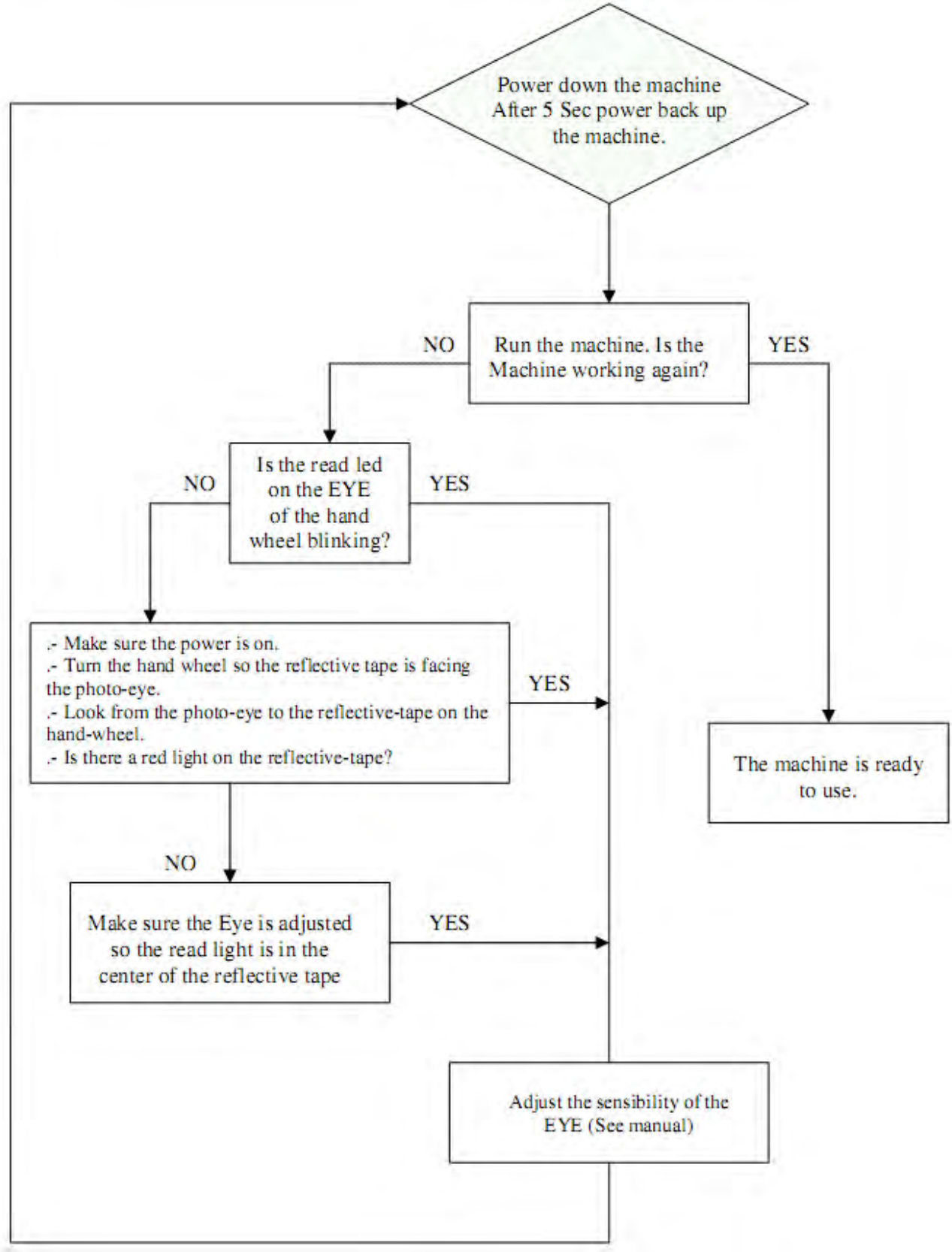

3.5. Serial Bus

3.5.1. Calibrating the Touch Screen

If you are having troubles locating the right place to get access to the function by touching the screen a screen calibration may be required.
Proceed as following:

1. Place one finger on the screen “C: and hold it there while pushing the Green ON button.

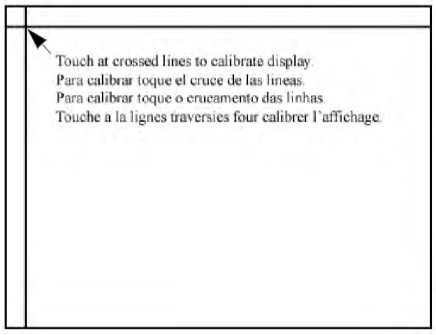

2. When the screen turns light, remove your finger and the screen will display two lines, one vertical and one horizontal, intersecting at the top left corner. The text “Touch at the crossed lines to calibrate display.” should appear in various languages. In older machines, there will be no text.

3. Using a small pointing device that will not puncture or damage the screen (such as a pencil eraser), touch the screen where the two lines intersect. Do this with as much accuracy as possible.

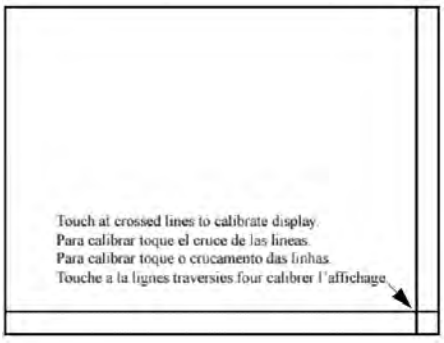

4. When the screen is touched, the display will change to two lines intersecting at the lower right of the screen.

5. Repeat step 4 where these lines intersect.

NOTE: The implementation of step 3 and step 4 directly affects the validity of all the buttons in the entire program. It is very important to be accurate.

Press the language button of your choice.

Press the RESET button at the lower left corner of the screen. See figure 5.

3.5.2. Installation of a new Touch Screen.

To program a new screen, they must follow these directions.

1. Install new screen and turn power on
2. When screen displays "Fatal Error Message" press continue
3. Enter Mechanic Security Code
4. After reading the "Warning Message" press continue again
5. Screen will begin to process the up-loading of existing program. This will take 60 - 90 seconds
6. After reading the "Last Warning Message" press continue again.
7. Screen will begin to process information again for 15 - 30 seconds
8. Reset routine will follow. Special note: Machine assemblies will reset or move to home positions
9. Screen will return to the Main Display and is ready to run.

3.5.3. Standard Modules

1. Program Module…4080-150

Stores the program information; It is also used to load program modifications or updates. For update procedures please refer to next chapter.

2. Memory Module….4080-970

Stores the unique data required to operate this particular machine; such as serial number, original factory parameters, etc. This module should never be exchanged with another machine.

3. Output Module…4080-140

They are responsible for transferring signals from the computer to the working elements such as valves, motors and relays, etc.

4. Input Module…4080-110

They are responsible for transferring signals from the machine to the computer such as switches, electric eyes, sensors, etc.

NOTE:

1. Even though all output and/or input modules within the machine are identical, they cannot be moved to another location on the serial bus cable, as the computer automatically assigns a working address for each one.
2. If a replacement is necessary, always replace with a new or loaner module from another machine.
3. Electrical Power to the machine must be turned “OFF” during replacements.
4. Computer will show an error if one or more modules are missing.

Procedure:

Remove the old module and connect the new one, after turning on the power, the computer will reassign the address to this new module.

3.5.4. Update a Machine using a New Program Module

NOTE: Very Important
Before starting the procedure below, go to Advanced Settings and write down all the settings shown in these screens.

1. Turn off power to the machine.
2. Replace the existing Program Module with the Program Module that contains the updated program.
3. With your finger on the screen, turn power on to the machine. When the screen changes from dark to light, remove your finger from the screen.
4. Carefully calibrate the screen. See screen calibration.

ATTENTION: Do not turn off the machine during this process for any reason, as vital information will be corrupted and it will be necessary to the call manufacturer for assistance and/or return the touch screen and module for base programming.

5. Press the “Update Controller” button. Input mechanic security code (33333). This process takes up to 5 minutes and asks you to press the “Continue” button once during this time.
   When complete the Controller will contain the updated program.

NOTE: Continue to item 6 only if you need to reprogram original module.

6. Turn off power to the machine.
7. Replace the Program Module that you installed in step #2 with the original Program Module that came with the machine.
   With your finger on the screen, turn power on to the machine. When the screen changes from dark to light; remove your finger from the screen.
8. Carefully calibrate the screen.
9. Press the “Update Program Mod” button. Input technician security code (xxxxx). This process takes up to 5 minutes. When complete the original Program Module that came with the machine and the Controller will contain the updated program.

Now that the process is complete, go to Advanced Settings and verify them using the settings you wrote down at the beginning of the process. Make any necessary corrections.

3.6. Maintenance

It is important that the maintenance technician read this manual and is familiar with all the functions and safety concerns of the unit before operating.

• Maintenance should only be performed by trained, qualified personnel. Before performing any maintenance or repair work, switch off the electrical, pneumatic, etc. power to the machine at the main source and secure it with a padlock so that it cannot be switched on again without authorization.

• Always wear proper safety equipment when operating or performing maintenance on any equipment.

• All recommended maintenance is for a single shift schedule; adjust as necessary for a multi-shift operation.

• Equipment should not be used for purposes other than designed or specified.

3.5.1. Daily (8 -10 hrs. of operation).

See operator Manual for details

3.5.2. Weekly (40 hrs. of operation)

• Repeat daily maintenance

• Check the sewing head drive belt for proper tightness and wear. Adjust and replace as necessary.

• Inspect photocell reflective tape, and replace if dirty or worn.

• Inspect pillow blocks and other bearings (conveyors and rotating shafts) and remove thread and debris.

• Inspect all moving parts to ensure smooth operation, lube or clean as necessary.

3.5.3. Monthly (160 hrs. of operation)

• Repeat daily and weekly maintenance

• Inspect pillow blocks and other non-sealed bearings (conveyors and rotating shafts) and apply one shot of recommended grease to each bearing/fitting.

• Refer to the manufacturer's guidelines for oil and oil filter changes and other maintenance pertaining to the sewing head and other OEM equipment.

• Monitor the air pressure filter/regulator and replace the filter as necessary

3.6.4. Sewing

No	Malfunctions	Causes	Corrective Measures
1	Thread breakage	1. Quality of thread is bad. 2. Thread is thick compared to needle. 3. Thread breakage due to heat of needle. 4. Thread tension is too strong. 5. The thread path of needle, looper, throat plate, needle guard, looper guide and all other thread paths are bruised. 6. Due to twice passing of thread.	1. Use a better quality thread 2. Change the needle or thread to proper size. 3. This occurs on synthetic thread. Use silicon oil lubricant. Lower r.p.m. 4. Weaken the thread tension. 5. Sharpen with oil whetstone or by buffing. 6. Activate the thread take-up tension lever.
2	Skip-stitch	**Skip stitching of needle thread.** 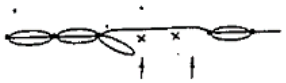 2 stitches collapse *(This occurs when looper does not scoop needle thread). 	1. Verify the scooping amount of looper. 2. Verify the clearance between the looper and needle. 3. Verify the timing of the looper & needle. 4. Depending on the thread, activate the thread take-up tension lever. 5. Verify the correct installation of the needle. 6. Verify the timing of the needle guard. 7. Refer to the passing of the thread.
		Loopers thread skip-stitches. * One stitch collapse. *(This occurs when the needle drops into the triangle of thread).	1. Verify above (1) & (3). 2. Verify the timing of the looper thread cam. 3. Adjust the position of the thread spreader hook. 4. Make the tension of the looper thread stronger. 5. Refer to passing of the thread
		Inadequate linking of loop. 	1. Refer 1.3 of skipping of needle thread 2. Verify the timing of the thread spreader and position of hook of the looper

		(This occurs when the needle thread is too much on left side) 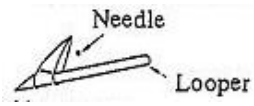 Besides above (In case of synthetic thread.) (In case of mixed synthetic thread.)	1. Drop the sewing speed 2. Use silicon oil lubricant 3. Use needle for synthetic thread 4. Make the scooping amount of looper greater 5. Drop the sewing speed. 6. Use silicon oil lubricant
3	Inadequate tightening of thread	1. When the needle thread tension is weak. 2. When the bobbin thread tension is strong. 3. Insufficient palling out of looper thread cam. 4. The thread is too thick against the needle. 5. Depending on the position of intermediate thread guide.	1. Tighten the needle thread tension nut. 2. Loosen the looper thread tension nut. 3. Change the thread passing to looper thread cam. 4. Change the needle. 5. Lower the position of the frame thread eyelet.

Frictional heat of the needle and silicon oil lubricant unit

When sewing synthetic materials at high speed, the needle often gets very hot due to friction, and may soften and finally bend.
Such frictional heat generated on the needle may cause the following troubles:

Stitch skipping: Needle thread loops are deformed by heat or stick on the heated needle
Thread breakage: Thread is melted by the heated needle
Texture breakage: Synthetic material is melted by the heated needle

In order to prevent such troubles, use the silicon oil lubricant unit. (Refer to the pertinent Instruction Book)
Another preventive way is to replace the needle with a super needle for synthetic materials, a needle with a relief stem or a thinner needle. If they do not solve the problem, lower the sewing speed down to an optimum rate depending on the ply and kind of cloth, thickness and type of thread, size of needle, etc.

Formation of "Balloon" stitch

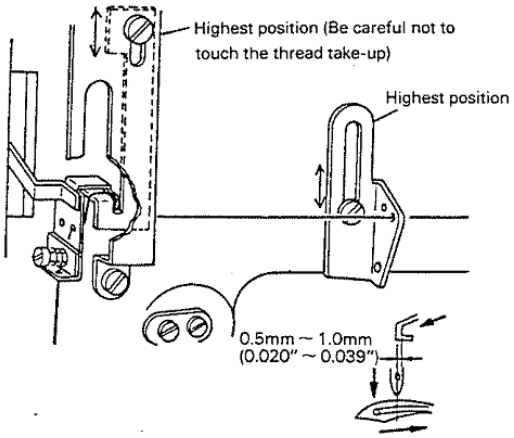

"Balloon" stitch, which is formed by a tightened needle thread and loosened looper thread, is sometimes advantageous when sewing flexible or expandable materials because of its soft and flexible characteristics which can minimize occurrence of puckering.
You can expect the effect of "Balloon" stitch by slightly adjusting MH-481 in the following way:
Adjust the machine so as to draw in the most part of the slack of the needle thread when the needle reaches its lowest point.
As illustrated, raise the thread take-up lever and also the frame thread eyelet to their highest positions so that the needle thread is extremely drawn when the needle bar reaches its lowest position. Also, increase the needle thread tension to a certain degree. Therefore, this method cannot be applied to those threads which are of very poor physical strength.
For reducing the looper thread tension, change the timing of the looper thread take-up to a little earlier than the standard setting.

Establish an optimum thread tension between the needle and looper threads in combination of these 2 adjustments. Your special attention should be paid here again to paragraph (7) for the relative tension between the thread take-up tension plate and the take-up tension disc. Readjust the tension ratio of 3g: 1g for MH-481 to 6g:3g for MH-481-4 after the above mentioned adjustment has been completed. In addition, the position of the thread spreader must be adjusted so that, in the case of MH-481-4, the inner face of the thread spreader is about 0.5mm to 1.0mm (0.020" to 0.039") away from the center of the needle when the needle point comes down

just about the top face of the looper as illustrated. This is very important to form even triangular loops to prevent triangular stitch skipping and similar troubles.

Reverse stitch skipping

This is one of the most difficult adjustments for the double chain stitch machines.

In the case of lockstitch machine, due to its principle of stitch formation, the blade of the sewing hook is designed to swing in the longitudinal way in parallel with the feed direction and the thread is passed through the needle from left to right.

Accordingly, almost the same shape of thread loop is formed by the forward and reverse feeds.

On the other hand, in double chain stitch machines, the looper moves across the direction of feed and the thread is passed through the needle from front to rear. Therefore, the thread loops may be twisted when the feed direction is reversed, while they are well shaped during the normal feed. The thread initially positioned in the opposite side of the needle turns round the needle to form a stitch and, therefore, the loop is formed in a laterally spiral shape. The direction of turn is an important factor as well as the direction of twist of the thread. Through our experiments, it can be said that the condition is improved by turning the thread counterclockwise with a delayed timing along a shorter trajectory.

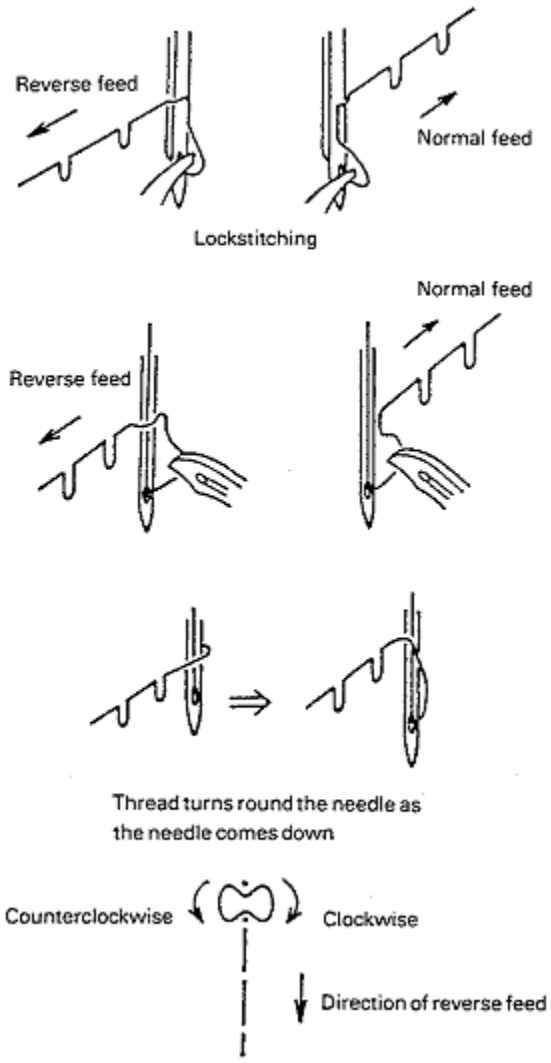

Accordingly, it is necessary to set the needle by slightly turning in the counterclockwise direction as illustrated, to lower the frame thread eyelet so that the needle thread is released gently from the looper and not to allow the thread spreader to hold the needle thread so long as to give an excessive tension to the needle thread.

Assembly Drawings & Parts Lists

The materials contained herein are confidential and proprietary information of Atlanta Attachment Company. In addition to any confidentiality and non-disclosure obligations that currently exist between you and Atlanta Attachment Company, your use of these materials serves as an acknowledgment of the confidential and proprietary nature of these materials and your duty not to make any unauthorized use or disclosure of these materials.

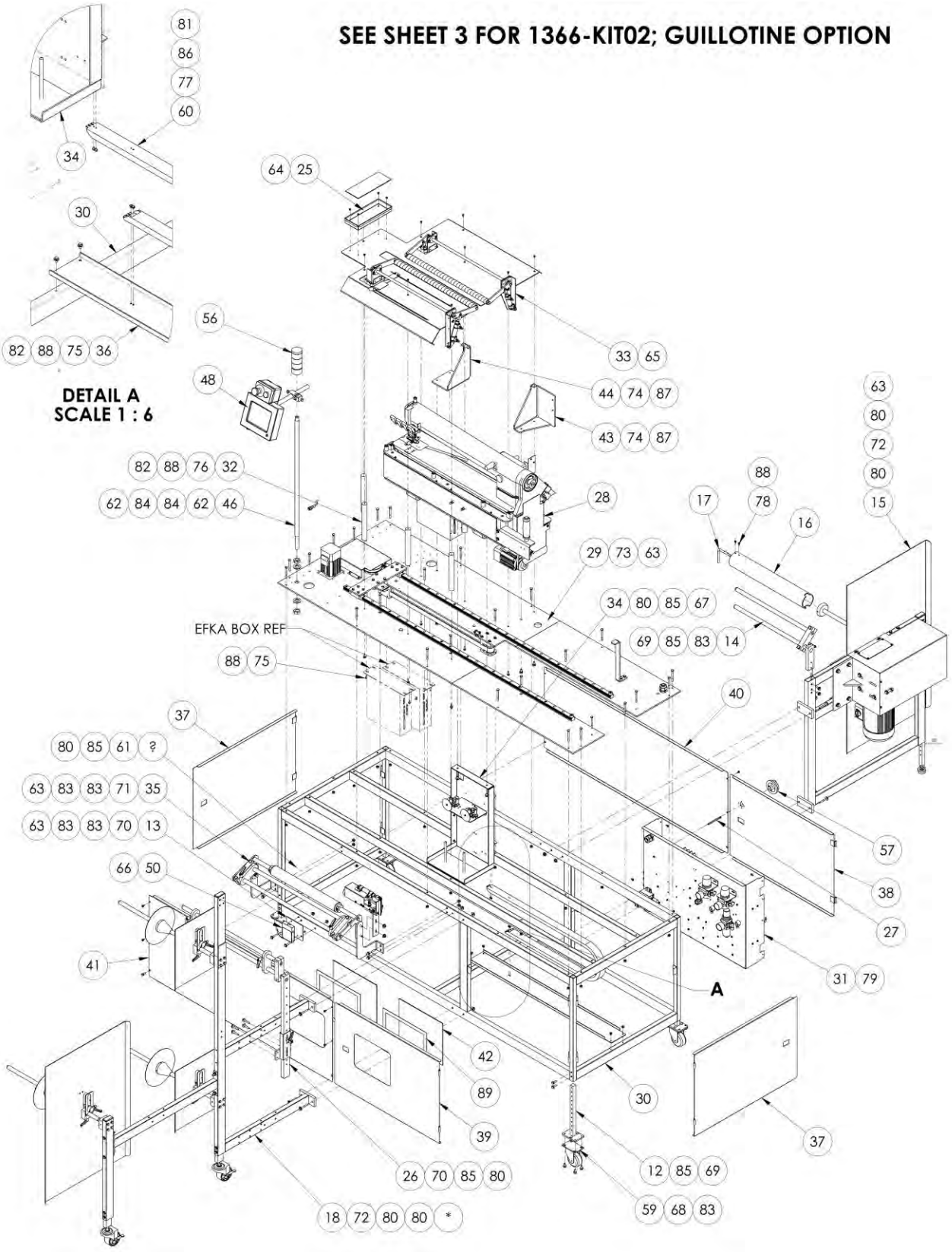
SEE SHEET 3 FOR 1366-KIT02; GUILLOTINE OPTION
DETAIL A
SCALE 1 : 6
EFKA BOX REF
A
81
86
77
60
34
64
25
30
82
88
75
36
56
48
33
65
44
74
87
43
74
87
63
80
72
80
15
88
78
17
16
82
88
76
32
62
84
84
62
46
28
29
73
63
34
80
85
67
69
85
83
14
88
75
40
37
80
85
61
?
63
83
83
71
35
63
83
83
70
13
66
50
41
57
38
27
31
79
42
89
39
30
37
26
70
85
80
12
85
69
18
72
80
80
*
59
68
83

11366-18S Vertical Stitch Machine

AAC Drawing Number 9002719 Rev 4

NO	QTY	PART #	DESCRIPTION	NO	QTY	PART #	DESCRIPTION
1	1	97-1655A	CABLE,ENCODER,10 FT	46	1	1366147	POLE,LIGHT,S-BUS
2	*2	0211-701X	CABLE, EFKA INPUT	47	1	4081032	CABLE, CONTROLLER,160"
3	1	0211-705C	CABLE,TREADLE,6 FT	48	1	4300103	TOUCH SCREEN ASBLY
4	2	0211-705E	CABLE, TREADLE,6',SBUS	49	3	AAEC4	CABLE,AAEHSKQ SWITCH,6' L
5	1	0211-705R	CABLE, TREADLE	50	1	EE24F163	FOOTSWITCH, TREADLITE
6	AR	1366-KIT02	GUILLOTINE KIT	51	*13'	EE85604	CABLE, 4X16 AWG
7	1	1366CARRIAGEPAR	PARAMETER SHEET, CARRIAGE	52	*13'	EE86312	CABLE, 12 COND, 22AWG
8	1	1366PULLERPER	PARAMETER SHEET, PULLER	53	*13'	EE892203	CABLE, 3 COND, 22 AWG PVC
9	1	1366S-PD	DIAGRAM, PNEU,11366-18S	54	1	EEDC15X15	DUCT,WIRE COVER,1.5
10	1	1366S-WD1	DIAGRAM, WIRING	55	1	EEDE15X15	DUCT,WIRE,1.5X1.5
11	1	1366SEWPAR	PARAMETER SHEET, SEW HEAD	56	1	EELES302RAGM2	TOWER,SIGNAL,NO POLE
12	4	1961-115	LEG WELDMENT	57	1	EESDHRY	DISCONNECT HANDLE,
13	1	1961-159	PLATE, MOUNT, FOOT PEDAL	58	5	FFRK44T-4	CABLE,EYE,12',NO END
14	1	1961-210G	TENSION RACK, PULLER, 18"	59	4	MM427-3RB	CASTER,SWIVEL,3"RUBBER
15	1	1961-320M	REWIND ASSY W/0 SLEEVE	60	1	MM180302848	DUCT,WIRE MICROTRAK
16	1	1961-372	SLEEVE, REWIND, 18" CAP	61	2	NNH1/4-20	NUT,HEX,1/4-20
17	1	1961-374A	HANDLE, SLEEVE	62	2	NNJ3/4-16	3/4-10 JAM NUT
18	1	1961-KIT6B	PREFEED ASSY,3 ROLL	63	40	NNK1/4-20	NUT,KEP,1/4-20
19	2	4003-MA100/FE	CABLE,M TO FM,3'	64	4	SSBC98016	10-32 X 1/4 BUTTON CAP SC
20	1	4059-EXT1	CABLE,6 COND,SIGNAL,18"	65	9	SSFC98024	#10-32 X .375 FLAT CAP
21	1	4059-EXT2	CABLE, 4CON, PWR, 18", MA	66	2	SSFS80016	6-32 X 1/4, FLAT SLOT
22	1	4080-4312	CABLE,2 COND,2 FT	67	2	SSHC01032	1/4-20 X 1/2 HHCS
23	1	4080-4609	CABLE, INPUT,12 COND	68	16	SSHC01040	1/4-20 X 5/8 HHCS
24	1	4080-4611	CABLE, INPUT, 2 COND	69	10	SSHC01048	1/4-20 X 3/4 HEX CAP
25	1	26151	TOOL TRAY, 1X3.5X9	70	6	SSHC01096	1/4-20 X 1-1/2 HHCS
26	1	1347094	UPPER TENSION ASSY	71	4	SSHC01112	HEX HEAD BOLT 1/4-20X1.75
27	1	1355487	DISCONNECT SHAFT,MOD	72	8	SSHC01128	1/4-20 X 2 HEX CAP
28	1	1366006	ASSEMBLY, CROSS-SEW HEAD	73	26	SSHC01160	1/4-20 X 2-1/2 HHCS
29	1	1366010	CARRIAGE, 24" SEWING	74	4	SSHC10040	5/16-18 X 5/8 HHCS
30	1	1366015	FRAME,VERTICAL STITCH	75	9	SSHC98024	10-32 X 3/8 HEX CAP
31	1	1366022	PANEL, ELECTRICAL ASBLY	76	7	SSHC98048	SCREW, HEX CAP #10-32X.75
32	7	1366025	STANDOFF, CLOTH PLATE	77	4	SSPS70016	4-40 X 1/2 PAN HD SLOTTED
33	1	1366029	CLOTH PLATE ASBLY	78	2	SSPS98024	10-32X3/8 PAN HD SLOT
34	1	1366033	THREAD STAND ASBLY	79	24	SSZH#10032	SCREW,SHT.METAL HEX 10
35	1	1366043	TENSION RACK ASSY	80	24	WWF1/4	WASHER, FLAT, 1/4", COM
36	1	1366048	CHANNEL, CABLE TRACK	81	4	WWF4	WASHER, FLAT, #4
37	2	1366088	DOOR	82	11	WWF10	WASHER, FLAT, #10, COM
38	1	1366089	DOOR,CONTROL BOX	83	30	WWFS1/4	WASHER,FLAT,SAE,1/4
39	1	1366090	DOOR	84	2	WWFS3/4	WASHER, .797ID X 1-1/2OD
40	1	1366091	COVER, REAR	85	17	WWL1/4	WASHER,LOCK, 1/4
41	1	1366092	COVER, FRONT, WITH	86	4	WWL4	WASHER,LOCK,#4
42	2	1366093	WINDOW, THREAD VIEWING	87	4	WWL5/16	WASHER,LOCK, 5/16
43	1	1366104	BRACKET,SUPPORT,RIGHT	88	18	WWL10	WASHER,LOCK,#10
44	1	1366107	BRACKET,SUPPORT,LEFT	89	2	ZZZSH-310	TAPE, DOUBLE SIDED,3/4"W
45	1	1366115	ENCODER ASBLY, 11366-18SB				

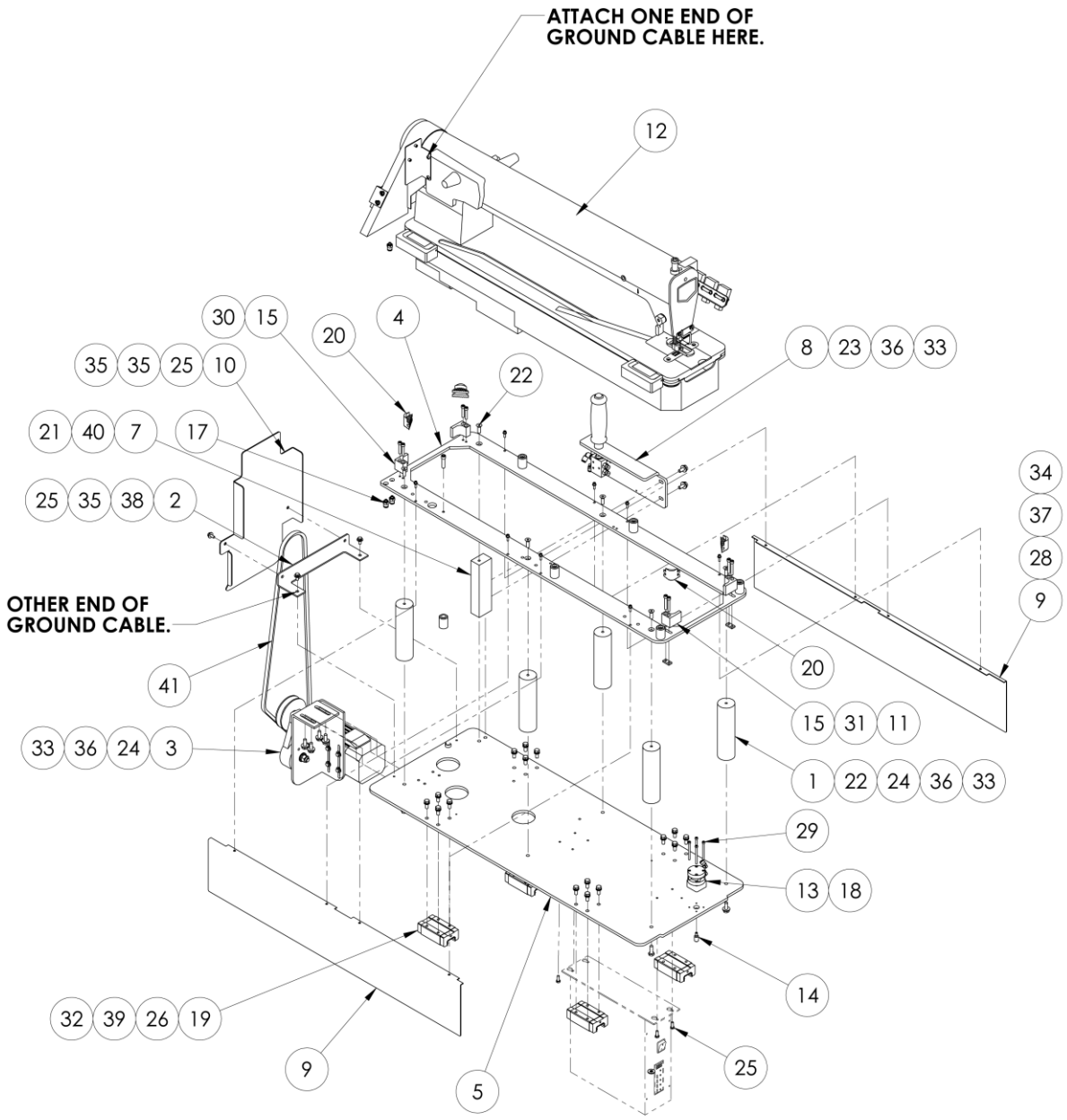

USE SNTVX7X140 NEEDLE

1366006 Cross-Sew Head Assembly

AAC Drawing Number 1366006 Rev 6

NO	QTY	PART #	DESCRIPTION
1	5	1347006	STANDOFF, CLOTH PLATE
2	1	1347053	SUPPORT, BELT COVER
3	1	1347126	MOTOR/TENSIONER ASSEMBLY
4	1	1366004	PLATE, SEW HEAD
5	1	1366007	PLATE, HEAD BASE
6	6	1366008	BUTTON, CLOTHPLATE GLIDE
7	1	1366011	BLOCK,1X2X5.5
8	1	1366012	HANDLE, ASSEMBLY
9	2	1366098	COVER, LOWER, OILPAN
10	1	1366136	BELT GUARD
11	2	1366139	PLATE,NUT,10-32@.375
12	1	1366155	SUB-ASSY, CROSS-SEW HEAD
13	1	1493415	BLOCK,CASSETTE LOCK,TOP
14	1	1493417	PIN,CARRIAGE LOCKING
15	4	32006505	BRKT, CORNER, SMALL
16	1	AACF040.5	CYLINDER,AIR,FLAT
17	2	AAQMC-4-10	QUICK MALE CONNECT
18	2	AAQME-5-10	AIR ELBOW, 10-32 X 5/32
19	4	MMAGH25CAN	LINEAR BEARING
20	4	MMF01A1419	PAD,VIBRATION SML RUBBER
21	2	SSBC01048	SCREW,BUTTON CAP,1/4-20X3/4
22	6	SSFC01048	1/4-20 X 3/4 FLAT CAP
23	2	SSHC01040	1/4-20 X 5/8 HHCS
24	9	SSHC01048	1/4-20 X 3/4 HEX CAP
25	8	SSHC98032	10-32X1/2 HEX HD
26	16	SSHCM6X16S	SCREW, HEX M6X16 SS
27	6	SSSC01064	1/4-20 X 1 SOC CAP
28	8	SSSC80032	6-32 X 1/2 SOC CAP SC
29	4	SSSC80112	6-32 X 1-3/4 SOC CAP SC
30	4	SSSC98064	10-32 X 1 SOC CAP
31	4	SSSC98080	10-32 X 1-1/4 SOC CAP
32	20	WWFM6	WASHER, FLAT, M6, SAE
33	14	WWFS1/4	WASHER,FLAT,SAE,1/4
34	8	WWFS6	WASHER, FLAT, #6
35	4	WWFS10	WASHER, FLAT, #10, SAE
36	11	WWL1/4	WASHER,LOCK, 1/4
37	8	WWL6	WASHER,LOCK,#6
38	4	WWL10	WASHER,LOCK,#10
39	20	WWLM6	WASHER,LOCK,M6
40	2	WWSI1/4	WASHER,INTERNAL TOOTH,1/4
41	1	ZX3848	V BELT,3/8 X 48"

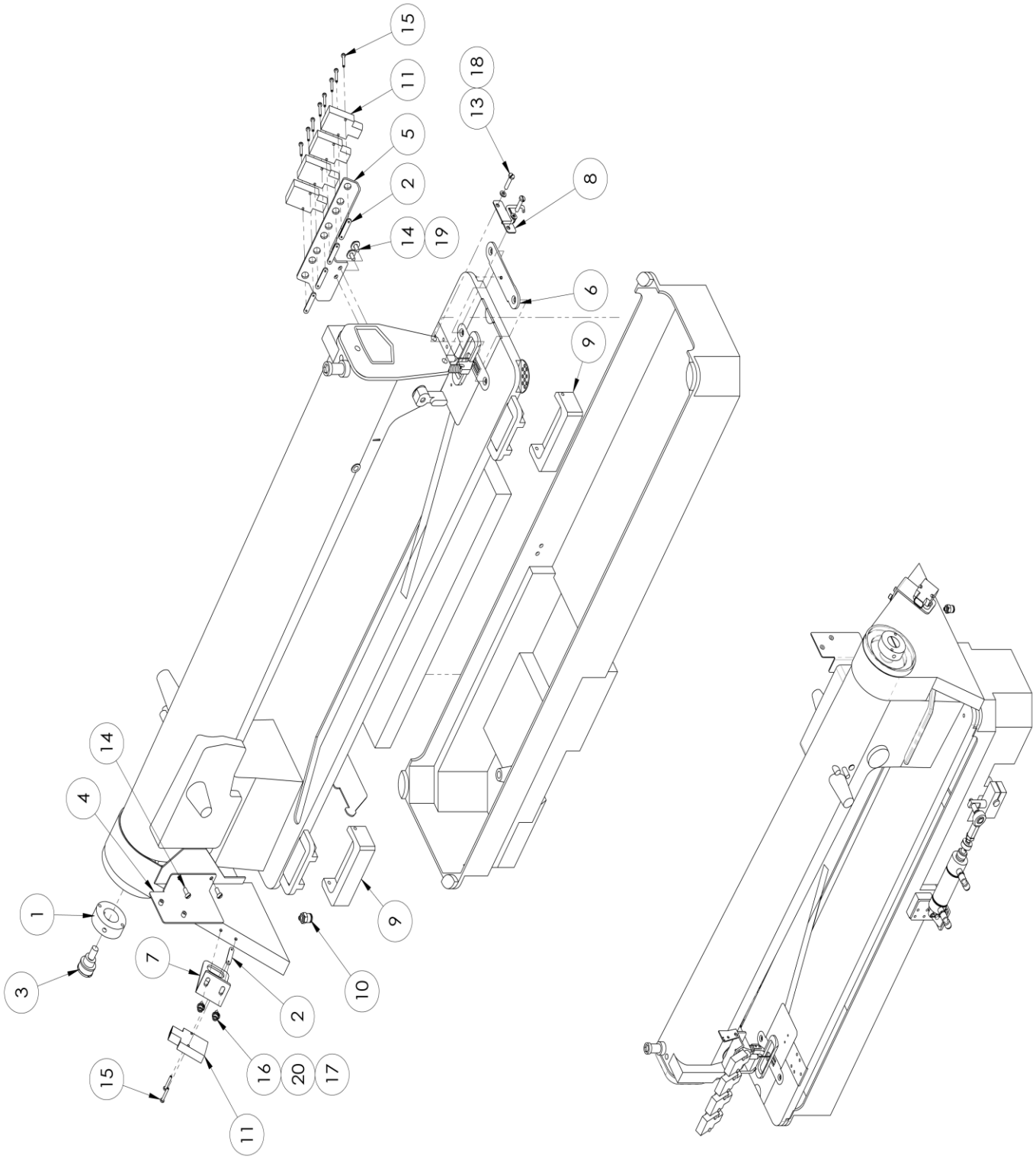
15
11
5
2
14
19
18
13
8
6
9
9
14
4
1
3
7
2
10
15
16
20
17
11

1366155 Cross-Sew Head Sub Assembly

AAC Drawing Number 1366155 Rev 2

NO	QTY	PART #	DESCRIPTION
1	1	1278-6364	DISC, TAPE MOUNTING
2	5	1975-412A	PLATE,NUT,4-40,.95CTC
3	1	22100-019	ADAPTER, SYNCHRONIZER
4	1	1366034	BRKT, THREAD EYELET
5	1	1366052	BRKT, EYE, QUAD
6	1	1366086	DARNING THROAT PLATE
7	1	1366099	BRACKET, EYE MOUNT
8	1	1366102	NEEDLE COOLER ASBY
9	2	32006522	HINGE MNT, SEWING HEAD
10	1	AAQMC-4-10	QUICK MALE CONNECT
11	5	FFSM312LVQ	EYE,ELECTRIC,10-30VDC
12	1	SJUKI-481U-24	JUKI-481U MODIFIED
13	2	SS7111810TP	SCREW,11/64-40X18MM
14	4	SSM84-566	SCREW,PAN HD,SLOTTED
15	10	SSPS70048	4-40 X 3/4 PAN HD SLOTTED
16	2	SSSC90024	#8-32 X 3/8 SOC CAP SC
17	4	WWF8	WASHER, FLAT, #8
18	2	WWFM4.3	WASHER, FLAT, M4
19	2	WWFS10	WASHER, FLAT, #10, SAE
20	4	WWL8	WASHER,LOCK,#8

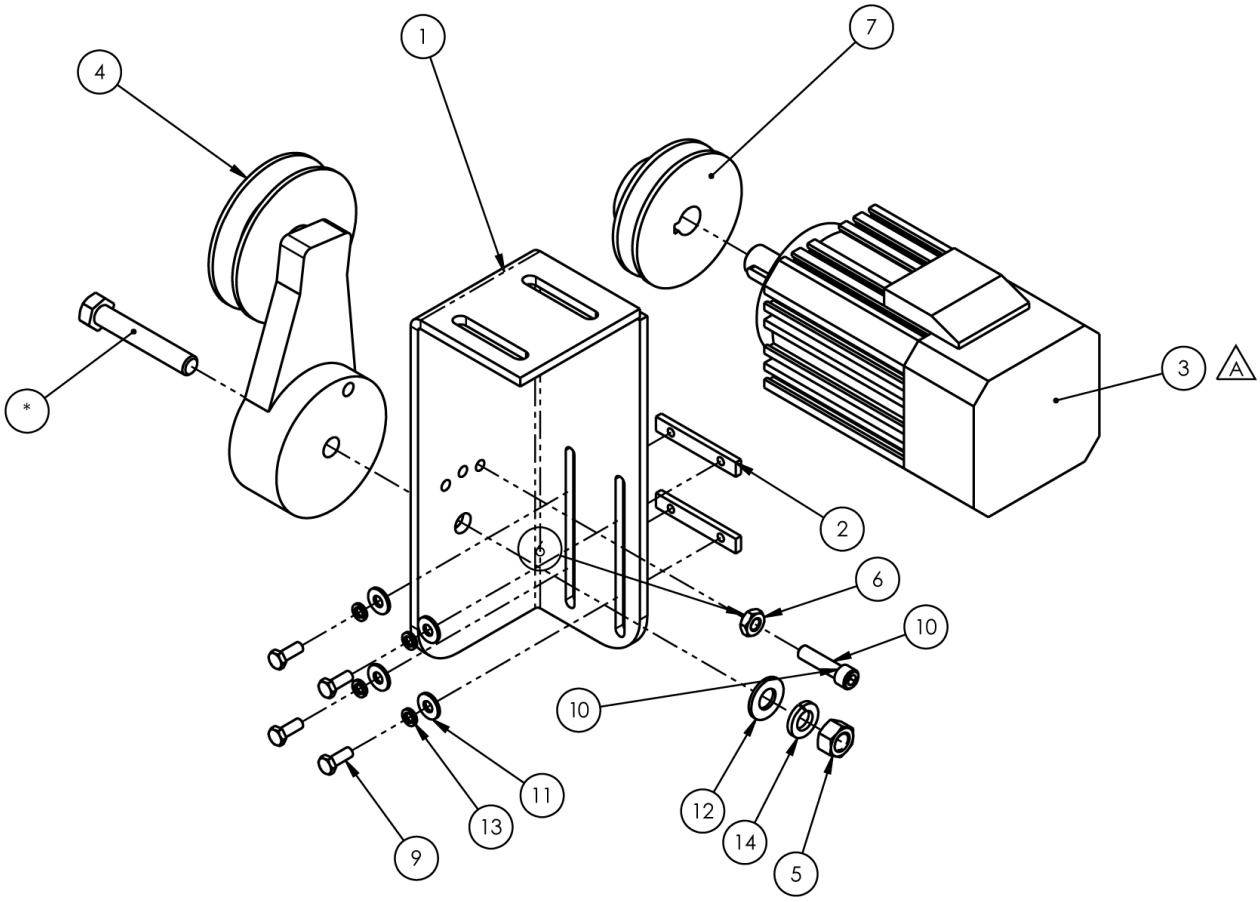

1347126 Motor/Tensioner Assembly

AAC Drawing Number 1347126 Rev 0

NO.	QTY	PART #	DESCRIPTION
1	1	1347008	BRKT,MOTOR MOUNT
2	2	1347046	PLATE,NUT,10-32@1.25 CTC
3	1	4059-DC1500A	MOTOR & CONTROLLER ONLY
4	1	MMFS0127	TENSIONER,V-BELT
5	1	NNH3/8-16	NUT,HEX,3/8-16
6	1	NNJ1/4-28	NUT, HEX, JAM, 1/4-28
7	1*	PP65X1-14	PULLEY,V-BELT 65MM OD
8	1	SSHC25144	3/8-16 X 2-1/4 HEX HEAD
9	4	SSHC98032	10-32X1/2 HEX HD
10	1	SSSC05064	1/4-28 X 7/8
11	4	WWFS10	WASHER, FLAT, #10, SAE
12	1	WWFS3/8	WASHER,FLAT,SAE,3/8
13	4	WWL10	WASHER,LOCK,#10,S/S
14	1	WWL3/8	WASHER, LOCK, 3/8

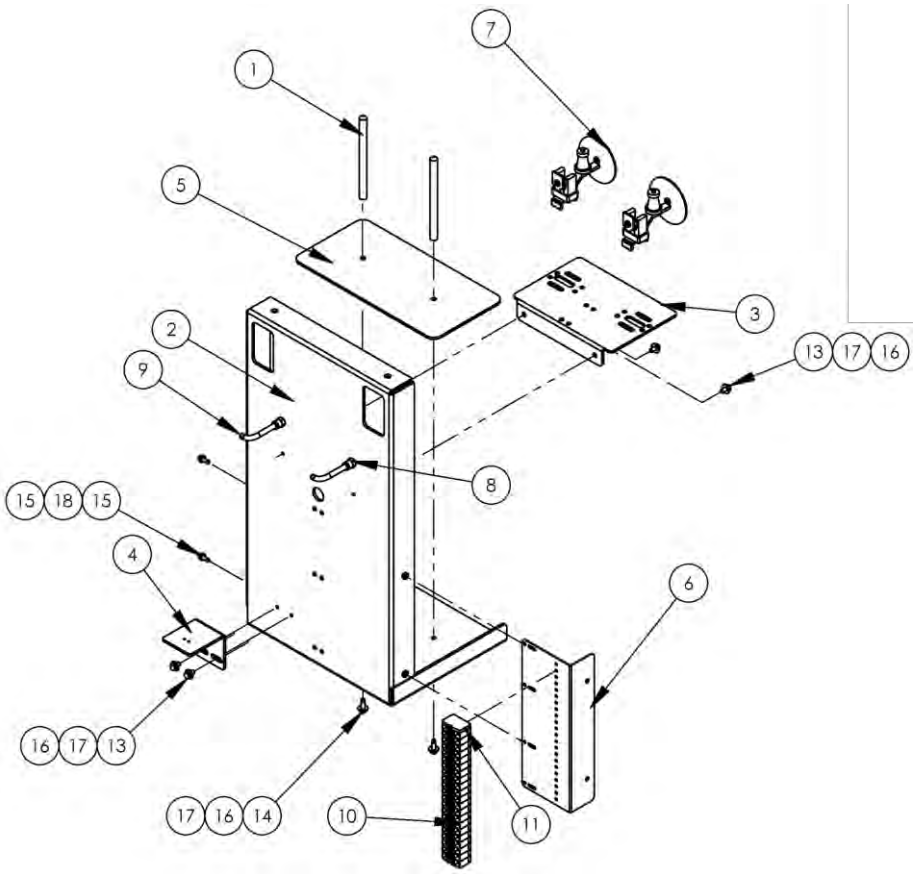

1366033 Thread Stand Assembly

AAC Drawing Number 1366033 Rev 2

NO.	QTY	PART #	DESCRIPTION
1	2	1337-4209	ROD, THREAD HOLDER
2	1	1366031	THREAD STAND, UNDER TABLE
3	1	1366032	BRKT, THREAD BREAK
4	1	1366049	MOUNT, CABLE TRACK, UPPER
5	1	1366084	PAD, FOAM, 2 POS, 5" CTC
6	1	1366095	MOUNT, WAGO, CARRIAGE
7	2	4003-IS3WT2	SENSOR,THREAD BREAK
8	2	AAQMC-4-10	QUICK MALE CONNECT
9	*1'	AATP1/4T	1/4 OD, TEFLON AIR LINE
10	21	FF264-341	TERMBLK,WAGO,TOP,DUAL,GRY
11	1	FF264-371	TERMBLK,WAGO,TOP,END
12	2	SSHC90032S	#8-32 X 1/2 HEX CAP
13	4	SSHC98024	10-32 X 3/8 HEX CAP
14	2	SSHC98032	10-32X1/2 HEX HD
15	2	WWF8	WASHER, FLAT, #8
16	6	WWFS10	WASHER, FLAT, #10, SAE
17	6	WWL10	WASHER,LOCK,#10,S/S
18	2	WWL8	WASHER,LOCK,#8

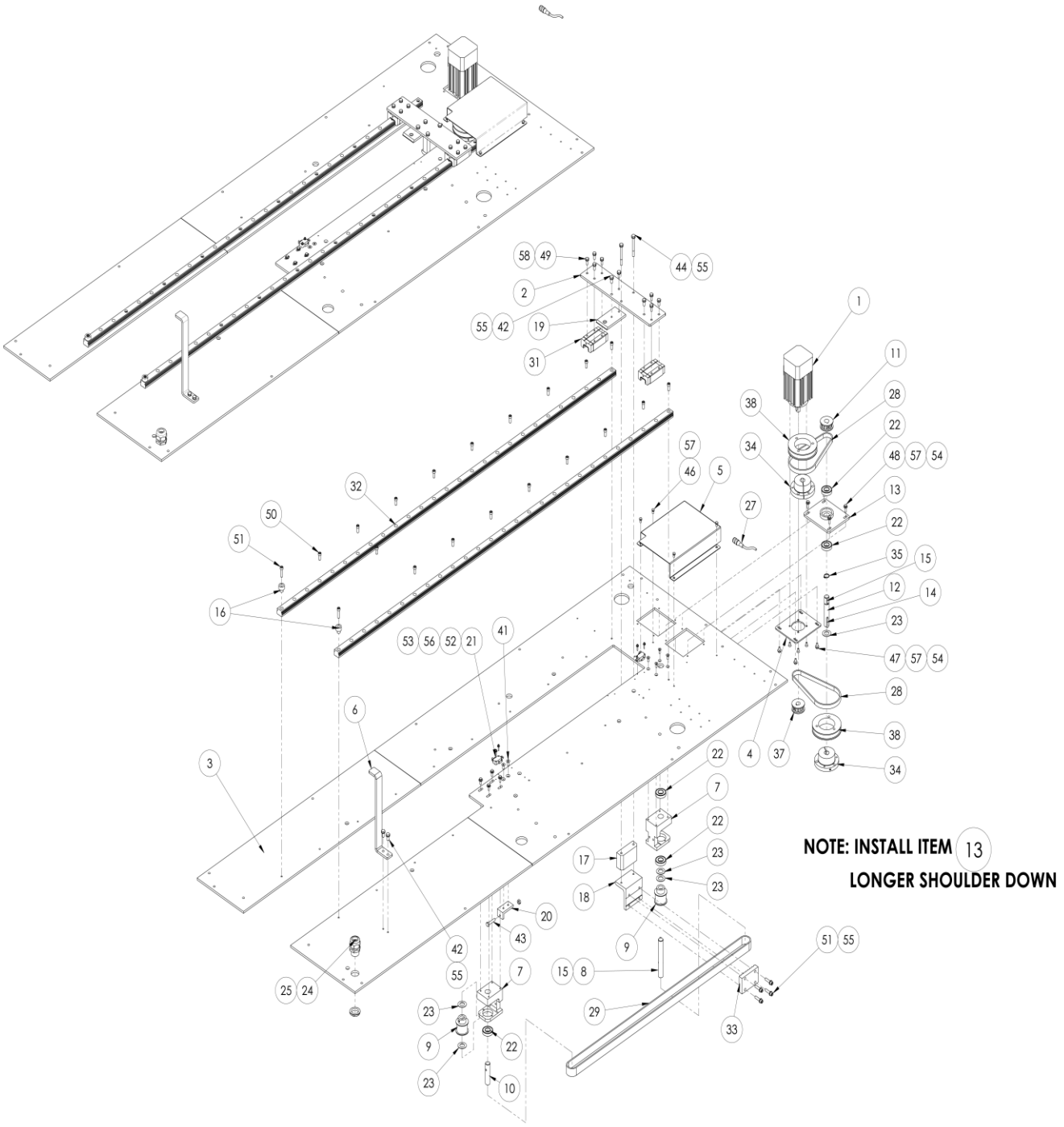
NOTE: INSTALL ITEM 13
LONGER SHOULDER DOWN

1366010 Carriage, 24” Sewing

AAC Drawing Number 1366010 Rev 5

NO	QTY	PART #	DESCRIPTION	NO	QTY	PART #	DESCRIPTION
1	1	4059-DC1500A	MOTOR & CONTROLLER ONLY	30	2	IIS012X064	SPRING PIN 3/16 DIA X 1LG
2	1	1366005	PLATE, SHIFT CYL MOUNT	31	2	MMAGH25	LINEAR BEARING
3	1	1366009	TOP, MAIN TABLE	32	2	MMAGR251	RAIL,LINEAR, AG 1580MM
4	1	1366050	MOUNT PLATE, EFKA MOTOR	33	1	MMCPL100	BELT CLAMP
5	1	1366051	COVER,BELT	34	2	MMSDSX5/8	SDS,5/8 BORE,3/16 KEY
6	1	1366064	REST, HEAD TILT	35	1	MMSH62STP	RING,SNAP,EXTERNAL
7	2	1366075	HOUSING, PULLEY, DRIVE	36	1	NNH1/4-20	NUT,HEX,1/4-20
8	1	1366076	SHAFT,DRIVE, INDEX	37	1	PP12LF050M	PULLEY, 3/8P, 12T, 14MM B
9	2	1366077	PULLEY,12 T	38	2	PP30L050SD	PULLEY 3/8P, 30T, 1/2 BORE
10	1	1366078	SHAFT,IDLER PULLEY	39	4	SSFC95032	10-24 X 1/2 FLAT ALLEN
11	1	1366079	PULLEY, 3/8P, 12T, .63 B	40	4	SSFCM5X10	SCREW,FLAT ALLEN CAP
12	1	1366080	SHAFT, JACK, SEW HEAD	41	2	SSFCM6X14	M6 X 20 FLAT ALLEN
13	1	1366083	BEARING MOUNT ASBY, JACK	42	4	SSHC01040	1/4-20 X 5/8 HHCS
14	1	1366153	KEY,3/16X1.2	43	1	SSHC01080	1/4-20 X 1-1/4 HHCS
15	2	1366154	KEY,3/16X.65	44	2	SSHC01160	1/4-20 X 2-1/2 HHCS
16	2	1493196	STOP, LINEAR BEARING	45	4	SSHC95040	SCREW, HEX CAP
17	1	1493411	SPACER,2X3	46	4	SSHC98024	10-32 X 3/8 HEX CAP
18	1	1493412	MOUNT,BELT CLAMP	47	4	SSHC98032	10-32X1/2 HEX HD
19	1	1493413	PLATE,LOCKING	48	4	SSHC98048	SCREW, HEX CAP #10-32X.75
20	1	1493416	BRKT,BELT TENSION	49	8	SSHCM6X16	SCREW, HEX M6X16 SS
21	2	A-2014-39	MICRO SWITCH	50	18	SSSC01040	1/4-20 X 5/8" SOC CAP SC
22	6	BB1L040	BEARING,BALL,.625 D	51	6	SSSC01064	1/4-20 X 1 SOC CAP
23	5	BBTRA1018	WASHER,THRUST,STEEL 5/8"	52	4	SSSC70040	4-40 X 5/8, SCREW,SOCKET CAP
24	1	FF3460	STRAIN RELIEF,LIQ TIGHT	53	4	WWF4	WASHER, FLAT, #4
25	1	FF8465	NUT,LOCK,3/4NPT,NYLON,BLK	54	12	WWF10	WASHER, FLAT, #10, COM
26	1	FF88010390	RECEPT,POWER,SCHUKO,230V	55	10	WWL1/4	WASHER,LOCK, 1/4
27	1	FFRK44T-4	CABLE,EYE,12',NO END	56	4	WWL4	WASHER,LOCK,#4
28	2	GG187L050	BELT, 3/8P, 50T, 1/2W	57	16	WWL10	WASHER,LOCK,#10
29	1	GG686L100ST	BELT, GEAR, 3/8P, 1"W	58	8	WWLM6	WASHER,LOCK,M6

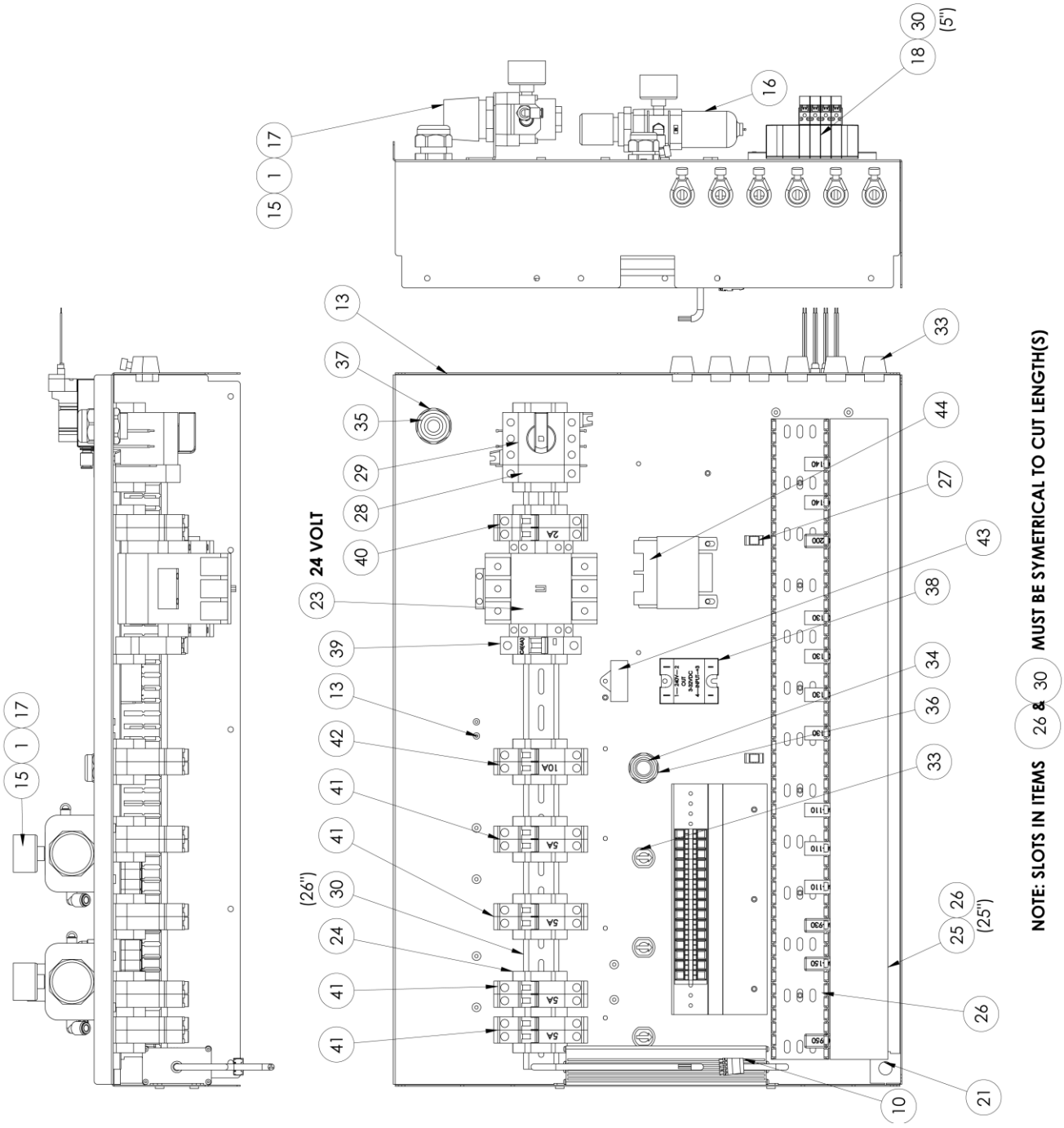
24 VOLT
NOTE: SLOTS IN ITEMS 26 & 30 MUST BE SYMETRICAL TO CUT LENGTH(S)
(5")
(26")
(25")

1366022 Electric Panel Assembly

AAC Drawing Number 1366022 Rev 6

NO	QTY	PART #	DESCRIPTION
1	2	0411-071	BRKT,REGULATOR
2	AR	1366S-WD1	DIAGRAM, WIRING
3	3	4080-110	MODULE,QUAD INPUT
4	4	4080-130	MODULE,QUAD OPTO-ISO
5	2	4080-140	MODULE,QUAD OUTPUT
6	1	4080-150	MODULE,PROGRAM
7	1	4080-200	MODULE,AIR PRESSURE
8	1	4080-930	MODULE,DATA
9	1	4080-950	MODULE,POWER
10	1	4080-990B	POWER SUPPLY, SBUS,
11	1	4080-4165	CABLE,SBUS ASSY,1366
12	1	12788-509A	JUMPER,OUTPUT,RESISTOR
13	1	1366062	PANEL, CONTROL BOX
14	1	1366096	PANEL, WAGO STANDOFF
15	2	AA198-503	0-30PSI AIR GAGE 1/8NPT
16	1	AA198-5102	REGULATOR W/GAUGE & NUT
17	2	AA198-RP3	REGULATOR,PRECISION AIR
18	1	AAE1137	SOLENOID ASSY,4 STA
19	2	AAQME-4-4	ELBOW, MALE,1/4X1/4NPT
20	2	AAQME-5-4	ELBOW, MALE 5/32X1/4NPT
21	1	EE64151B	FERRITE CORE,SPLIT,CABLE
22	13'	EE85604	CABLE
23	1	EECGC85A24	CONTACTOR,65A,24VAC
24	13	EECLIPFIX	ANCHOR,DIN RAIL
25	4.17 FT	EEDC2X2	COVER,WIRE DUCT
26	4.17 FT	EEDF2X2	DUCT,WIRE,2X2, MOD
27	2	EEPWMSH25	MOUNT,CABLE TIE,
28	1	EESD2GP	DISCONNECT PE,80A
29	1	EESD2080RR	DISCONNECT, 3 POLE, 80A, IEC
30	31"	EETS35X7.5A	DIN RAIL-AMERICAN
31	15	FF264-341	TERMBLK,WAGO,TOP,DUAL,GRY
32	1	FF264-371	TERMBLK,WAGO,TOP,END
33	9	FF1724	STRAIN RELIEF
34	1	FF3200	STRAIN RELIEF,1/2NPT
35	1	FF3460	STRAIN RELIEF,LIQ TIGHT
36	1	FF8463	NUT,LOCK,1/2NPT,NYLON,BLK
37	1	FF8465	NUT,LOCK,3/4NPT,NYLON,BLK
38	1	FFD2425F	RELAY,SSR,24VAC,25A
39	1	FFL741C	CIRCUIT BREAKER,THERM-MAG
40	1	FFQL213DMKM02	CIRCUIT BREAKER,2A,2P
41	4	FFQL213DMKM05	CIRCUIT BREAKER,5A,2P
42	1	FFQL213DMKM10	CIRCUIT BREAKER,10A,2P
43	1	FFRAV781BW	MODULE, TVS, 240 VAC
44	1	FFTX28/5A	TRANSFORMER,28V,4.6AMP

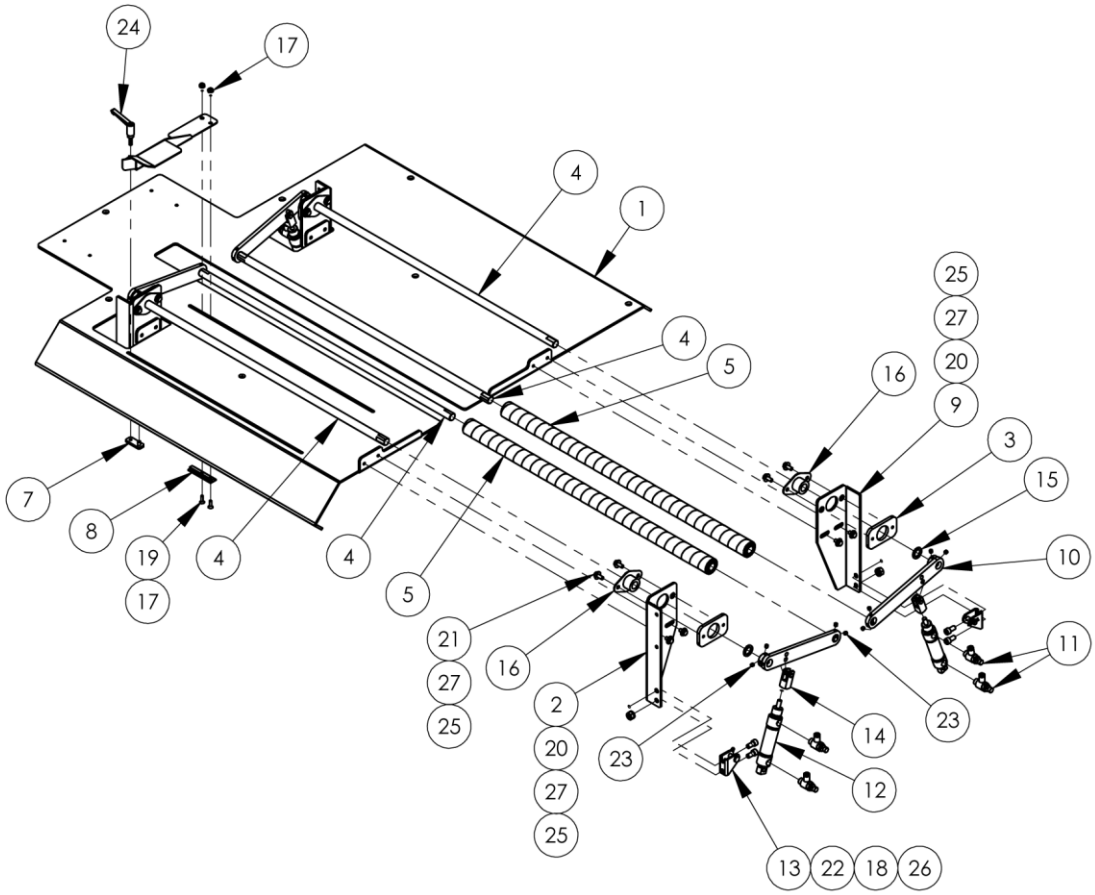
24
17
4
1
4
5
25
27
20
16
9
3
15
10
11
7
8
19
17
4
4
5
21
27
25
16
2
20
27
25
23
23
14
12
13
22
18
26

1366029 Cloth Plate Assembly

AAC Drawing Number 1366029 Rev 4

NO	QTY	PART #	DESCRIPTION
1	1	1366026	CLOTHPLATE, MAIN, 18IN
2	2	1366030	VERTICAL
3	4	1366036	PLATE, NUT 2 X 10-32
4	4	1366066	ROD,STR,SST,1/2 DIA.
5	2	1366069	ROLLER
6	1	1366072	GUIDE, FABRIC EDGE
7	1	1366073	PLATE, NUT, WITH STUD
8	1	1366094	T-SLIDE, EDGE GUIDE
9	2	1366103	VERTICAL
10	4	1366105	ARM,HOLD
11	8	AA198RA5	FLOW CONTROL,5/32 X
12	4	AAC7DP-	CYLINDER,AIR,DA
13	4	AAFBP-	BRKT,PIVOT,1/4 BORE
14	4	AAFCT-7	CLEVIS,1/4-28 X 1/4 ID
15	4	BBTT706	BEARING,BRONZE,OD.75
16	4	MMBFM50	BRG SELF ALIGN 1/2 B
17	2	NNE6-32	NUT,ELASTIC LOCK,6-32
18	4	NNH1/4-20	NUT,HEX,1/4-20
19	2	SSFC80032	6-32 X 1/2 FLAT CAP
20	8	SSHC98024	10-32 X 3/8 HEX CAP
21	8	SSHC98032	10-32X1/2 HEX HD
22	8	SSSC01032	1/4-20X1/2 SOC CAP
23	16	SSSS98012	SCREW,SKT SET
24	1	TTH48070	HANDLE,THREADED 10-
25	16	WWF10	WASHER, FLAT, #10,
26	4	WWL1/4	WASHER,LOCK, 1/4
27	16	WWL10	WASHER,LOCK,#10

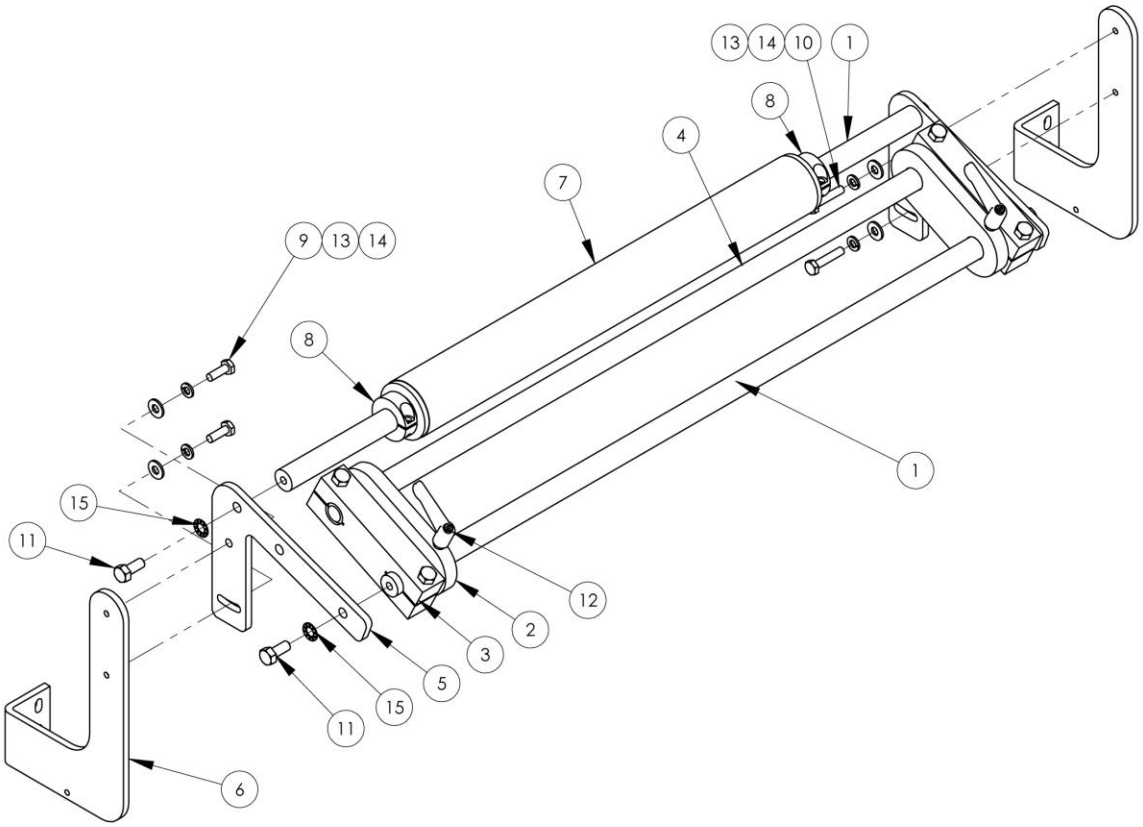

1366043 Tension Rack Assembly

AAC Drawing Number 1366043 Rev 2

NO	QTY	PART #	DESCRIPTION
1	2	1961-206D	ROD, MATERIAL TENSION
2	2	1961-211	PLATE, EDGE GUIDE
3	2	1962-3201	CLAMP, 3/4 ROD, 3" CTC
4	1	1366003	ROD, MATERIAL TENSION
5	2	1366019	PLATE, END,TENSION
6	2	1366042	SUPPORT, GUIDE, FRONT
7	1	33005689C	ROLLER,17.25L,2 OD,.75 ID
8	2	CCCL12F	CLAMP COLLAR- 3/4
9	2	SSHC01048	1/4-20 X 3/4 HEX CAP
10	2	SSHC01080	1/4-20 X 1-1/4 HHCS
11	4	SSHC10048	5/16-18 X 3/4 HHCS
12	2	TTH32415	HANDLE,THDED,1/4-20X7/8
13	4	WWFS1/4	WASHER,FLAT,SAE,1/4
14	4	WWL1/4	WASHER,LOCK, 1/4
15	4	WWSI5/16	WASHER,INTERNAL TOOTH,5/16

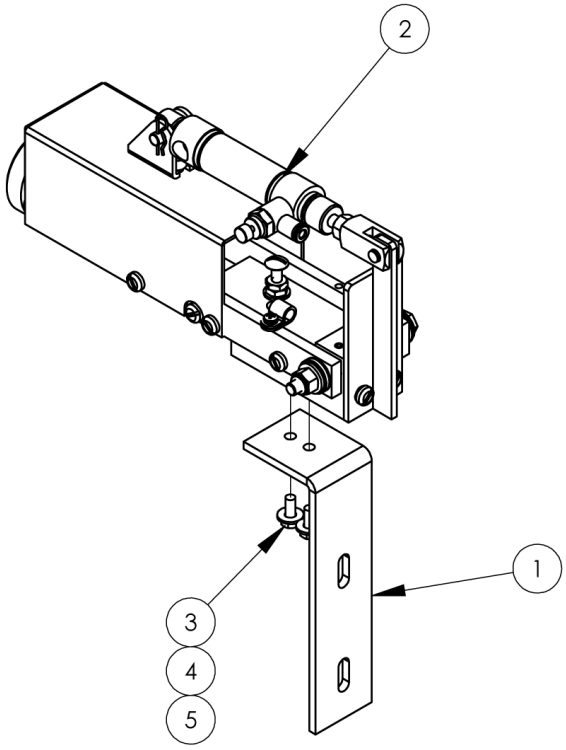

1366115 Encoder Assembly

AAC Drawing Number 1366115 Rev 2

NO	QTY	PART #	DESCRIPTION
1	1	1366112	BKT, MTNG,
2	1	4300285	ENCODER
3	2	SSHC98	10-32X1/2 HEX HD
4	2	WWFS10	WASHER, FLAT,
5	2	WWL10	WASHER,LOCK,#1

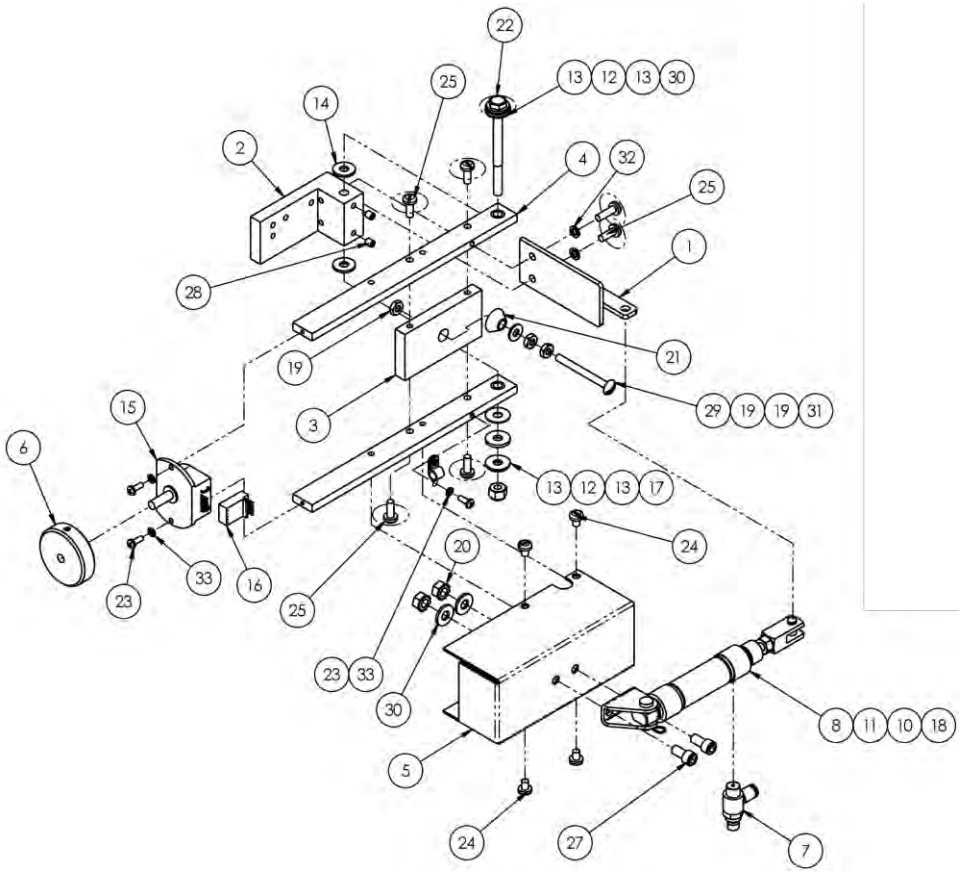

4300285 Encoder Assembly

AAC Drawing Number 4300285 Rev 1

NO.	QTY	PART #	DESCRIPTION
1	1	1335637	MOUNT, CYL CLEVIS
2	1	1335M-2502	MOUNT,BASE1335M-2500
3	1	1335M-2503	PLATE,TENSION
4	2	1335M-2511	BRKT,SIDE,LONG
5	1	1335M-2514	COVER,LONG
6	1	4300284	WHEEL, ENCODER
7	1	AA198RA508	FLOW CONTROL,5/32 X 1/8"
8	1	AAC7DP-.5	CYLINDER,AIR,DA
9	1	AAF1_8	CLAMP,PLASTIC 1/8
10	1	AAFBP-11C	BRKT,PIVOT,1/4 BORE
11	1	AAFCT-7	CLEVIS,AIR CYL, 1/4-28
12	2	BBNTA411	BEARING,THRUST,.250B
13	4	BBTRA411	WASHER,THRUST,STEEL
14	2	BBTT601	WASHER,THRUST,BRONZE
15	1	EEH1-096-HS	ENCODER,OPTICAL
16	1	EEPC3	MODULE,ENCODER
17	1	RRBEEHIVEH	SPRING,HEAVY BEEHIVE

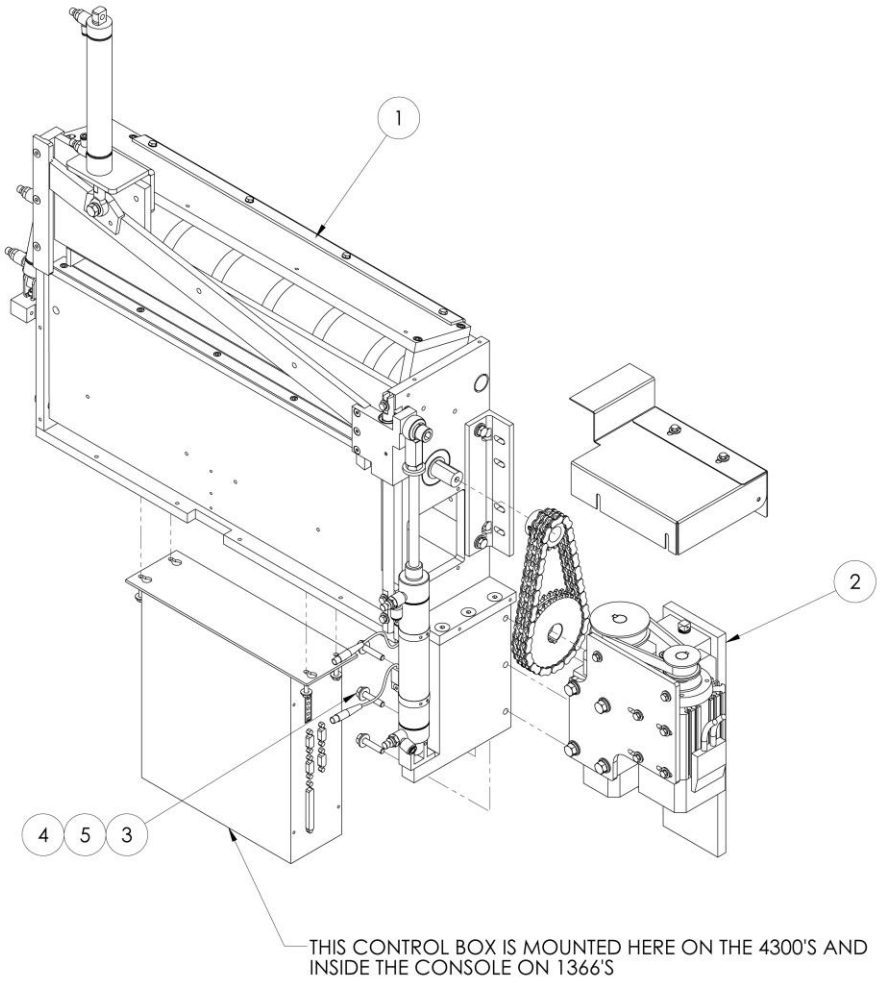

1366140 Guillotine Assembly

AAC Drawing Number 1366140 Rev 0

NO	QTY	PART #	DESCRIPTION
1	1	1366114	GULLIOTINE ASSY, 18"
2	1	1366150	ADAPTOR, WORM GEAR DRIVE
3	3	SSHC01080	1/4-20 X 1-1/4 HHCS
4	3	WWFS1/4	WASHER,FLAT,SAE,1/4
5	3	WWL1/4	WASHER,LOCK, 1/4
6	1	1366188	GUARD, TOP ROLLER

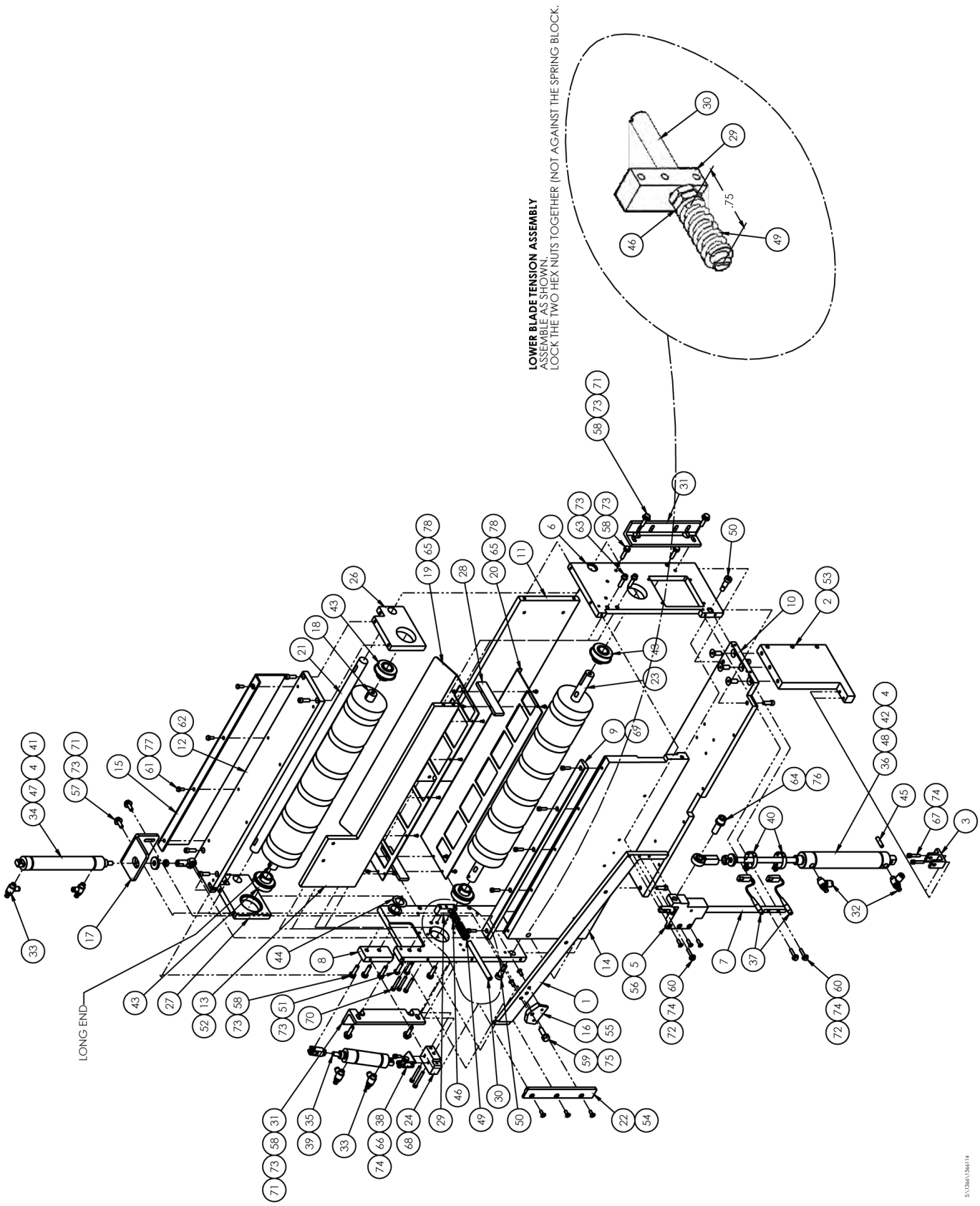
LOWER BLADE TENSION ASSEMBLY
ASSEMBLE AS SHOWN.
LOCK THE TWO HEX NUTS TOGETHER (NOT AGAINST THE SPRING BLOCK.
.75
LONG END

1366114 Guillotine Assembly,18”

AAC Drawing Number 1366114 Rev 2

NO.	QTY	PART #	DESCRIPTION	NO.	QTY	PART #	DESCRIPTION
1	1	1366113	TOP BLADE, 18" CAPACITY	40	2	AAFD35000	BAND, SWITCH, HSKQ,UNV.
2	1	1366144	MOUNT, PIVOT BRKT	41	1	BBAW-5Z	ROD END, SPHERICAL .5/16ID
3	1	1366145	MOUNT, CYLINDER PIVOT	42	1	BBAW-7	BEARING,ROD END,FEMALE
4	2	273-4-503A	WASHER,LEATHER	43	4	BBS8703-88	BEARING,BALL,.75IDX1.75OD
5	1	3200082	BLOCK,GUIDE,TOP BLADE	44	1	BBTRA1220	WASHER,THRUST,STEEL
6	1	3200121	PLATE,FRONT SLIDE	45	1	IID016X064	DOWEL PIN,1/4 X 1
7	1	3200124	SHAFT, TOP BLADE	46	2	NNJ3/8-24	3/8-24 JAM NUT
8	1	3200129	BLOCK, PLATE RUB MOUNTING	47	1	NNJ5/16-24	NUT,JAM,5/16-24
9	1	32004002A	BLADE, BOTTOM 18" CAPACIT	48	1	NNJ7/16-20	NUT,JAM,7/16-20
10	1	4300155	PLATE, BASE	49	1	RRLC092H6	SPRING,COMP,.092X.60X1.5
11	1	4300156	PLATE, MAIN MTG.	50	2	SSAS024040	SCREW,ALLEN,SHOULDER
12	1	4300157	PLATE, BACK	51	2	SSBC01064	1/4-20 X 1 BUT CAP SC
13	1	4300158	BAR, TIE	52	5	SSBC70016	#4-40 X 1/4 BHCS
14	1	4300159	PLATE, HINGE	53	3	SSFC10056	5/16-18X7/8 FLAT HD CAP
15	1	4300161	GUARD, TOP	54	3	SSFC95032	10-24 X 1/2 FLAT ALLEN
16	1	4300162	PUSH BRACKET	55	2	SSFC98032	10-32 X 1/2 FLAT ALLEN CAP
17	1	4300163	MOUNT, CYLINDER	56	3	SSFC98040	#10-32 X 5/8 FLAT ALLEN
18	1	4300164	ROLLER, TOP DRIVE	57	2	SSHC01048	1/4-20 X 3/4 HEX CAP
19	1	4300165	GUARD, TOP ROLLER	58	10	SSHC01064	1/4-20 X 1 HHCS
20	1	4300166	GUARD, BOTTOM ROLLER	59	1	SSHC10064	5/16-18 X 1 HHCS
21	1	4300167	SHAFT, FLATTED, JR, .75OD	60	3	SSHC95064	SCREW, HEX CAP
22	1	4300171	PLATE, RUB, TOP BLADE	61	8	SSHC98032	10-32X1/2 HEX HD
23	1	32004027	ROLLER, TOP DRIVE	62	8	SSSC01048	1/4-20 X 3/4" SOC CAP SC
24	1	32004063	MOUNT, AIR CYLINDER	63	2	SSSC01064	1/4-20 X 1 SOC CAP
25	1	33004008	PLATE,REAR SIDE	64	1	SSSC40080	7/16-20 X 1-1/4 SOC CAP
26	1	33004009	ARM, TOP LEFT	65	8	SSSC70016	4-40 X 1/4 SOCKET CAP
27	1	33004014	ARM, TOP RIGHT	66	2	SSSC95032	10-24 X1/2, SOC CAP
28	2	33004015	GUIDE, INTERNAL	67	2	SSSC95064	10-24 X1, SOC CAP
29	1	33004017	BLOCK, SPRING	68	2	SSSC95096	10-24 X1-1/2, SOC CAP
30	1	33004031	POST, SPRING	69	5	SSSC98040	10-32 X 5/8 SOC CAP
31	2	33004058A	MOUNTING, GUILLOTINE	70	3	SSSC98080	10-32 X 1-1/4 SOC CAP
32	2	AA198RA408	FLOW CONTROL,1/4 X 1/8	71	6	WWFS1/4	WASHER,FLAT,SAE,1/4
33	4	AA198RA508	FLOW CONTROL,5/32 X 1/8"	72	7	WWFS10	WASHER, FLAT, #10, SAE
34	1	AAC095DP	CYLINDER,AIR,DA	73	16	WWL1/4	WASHER,LOCK,1/4
35	1	AAC6DP-1	CYLINDER,AIR,DA	74	11	WWL10	WASHER,LOCK,#10
36	1	AACM125DP	CYLINDER,AIR,DA W/MAGNET	75	1	WWL5/16	WASHER, LOCK, 5/16
37	2	AAEHSKQ	SWITCH,HALL EFFECT(SMC)	76	1	WWL7/16	WASHER,LOCK,7/16
38	1	AAFBP-11C	BRKT,PIVOT,1/4 BORE	77	4	wwsi10	WASHER,INTERNAL TOOTH,10
39	1	AAFCT-11	CLEVIS, 5/16-24 X 1/4 ID	78	8	WWSI4	WASHER,INT. TOOTH

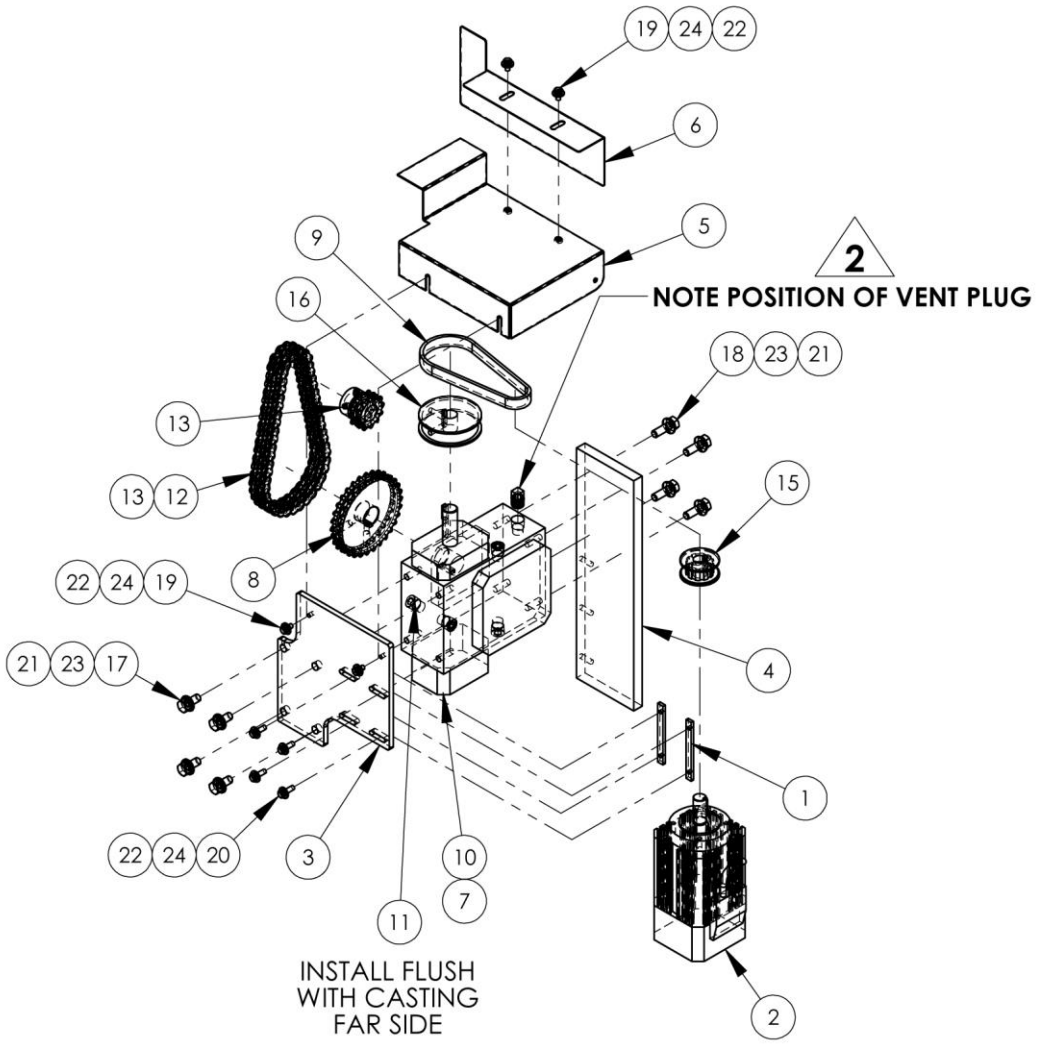

1366150 Worm Gear Drive Adaptor

AAC Drawing Number 1366150 Rev 2

NO	QTY	PART #	DESCRIPTION	NO	QTY	PART #	DESCRIPTION
1	2	0211-209	PLATE,NUT,10-32@2.25 CTC	13	1	MMD35B12M	SPROCKET,22T,DBL,3/4B
2	1	4059-DC1500	MOTOR & CONTROLLER	14	*1	MMD35CL	MASTER LINK,DBL,#35 CHAIN
3	1	1366141	MTG. PLT, EFKA MOTOR	15	1	PP10LF050M3	PULLEY,GEAR,3/8P,10T,14MM
4	1	1366142	PLT,MNT,WORM DRIVE	16	1	PP20LB050M4	PULLEY,GEAR,3/8P,.63B,20T
5	1	1366143	GUARD,EFKA MOTOR	17	4	SSHC10048	5/16-18 X 3/4 HHCS
6	1	1366146	GUARD	18	4	SSHC10064	5/16-18 X 1 HHCS
7	2	1961028	KEY, 3/16 SQ X 11/16 LG	19	4	SSHC98024	10-32 X 3/8 HEX CAP
8	1	1961101	SPROCKET, 30T, 35, DBL,	20	4	SSHC98040	10-32X5/8 HEX HD
9	1	GG135L050	BELT, 3/8P,, 1/2W	21	8	WWFS5/16	WASHER,FLAT,SAE,5/16
10	1	MM20U1-30M1	WORM, REDUCE,30:1,RH	22	8	WWFS10	WASHER, FLAT, #10, SAE
11	1	MM4534K42	PLUG, FLUSH, 1/4" PIPE	23	8	WWL5/16	WASHER,LOCK, 5/16
12	1	MMD35 (18.75"	CHAIN,STEEL, DBL #35-2 X 18.75 IN	24	8	WWL10	WASHER,LOCK,#10

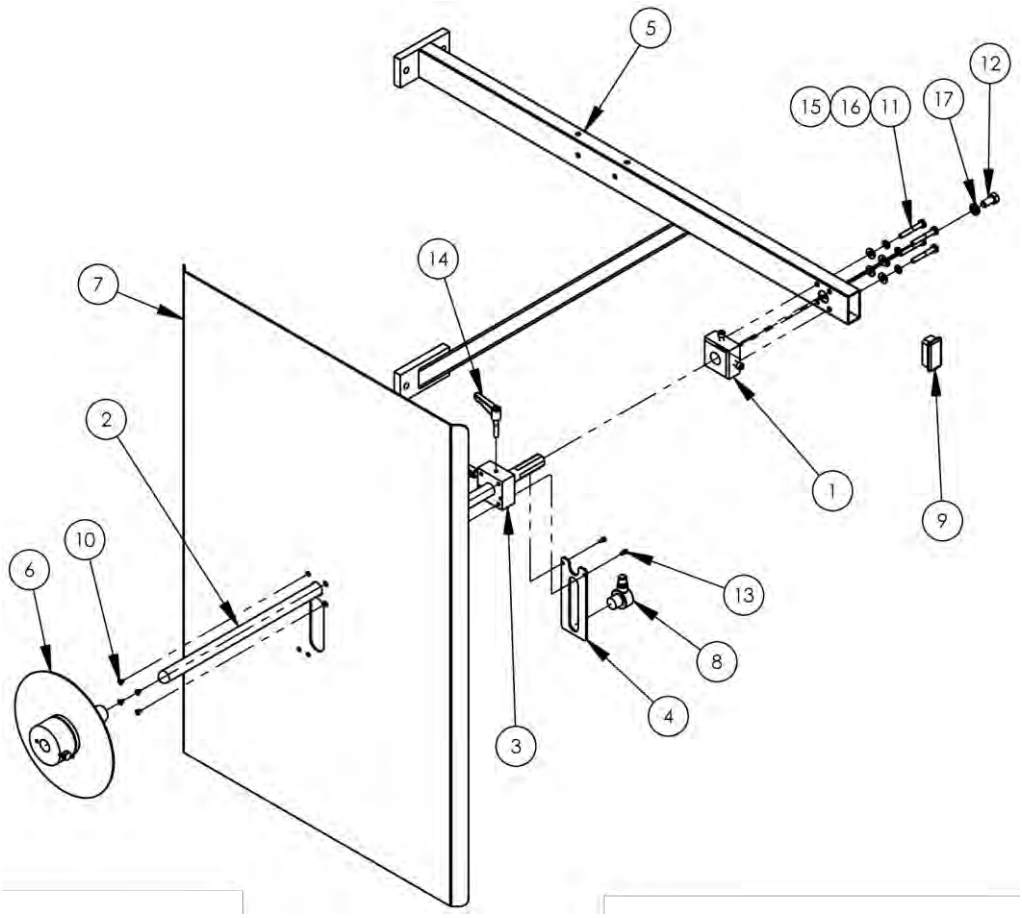

1961-250G Prefeed Assembly, 24” Cap

AAC Drawing Number 9001637 Rev 2

NO.	QTY	PART #	DESCRIPTION
1	1	1961-251C	HUB UNWIND SHAFT
2	1	1961-252B	ROD, ROLL, 31" L
3	1	1961-253A	HUB, UNWIND STAND
4	1	1961-255	BRACKET, SENSOR MTG
5	1	1961-256	FRAME, SPINDLE HOLDER
6	1	33008708	BALL BEARING DISC ASSY
7	1	784B-2436	PLATE, ALU, 23.75 X 31.75
8	1	FFT18FF100Q	EYE,FIXED FIELD, 4IN
9	1	MM132-1496	PLUG 1 X 2
10	4	SSFC80016	6-32 X 1/4 FLAT SOC CAP
11	4	SSHC01112	HEX HEAD BOLT 1/4-20X1.75
12	1	SSHC25048	3/8-16X3/4,HEX CAP
13	2	SSSC80016	6-32 X 3/16 SOC CAP SC
14	2	TTH32416	HANDLE,THRD,1/4-20X1-1/8
15	4	WWFS1/4	WASHER,FLAT,SAE,1/4
16	4	WWL1/4	WASHER,LOCK,1/4
17	1	WWL3/8	WASHER, LOCK, 3/8

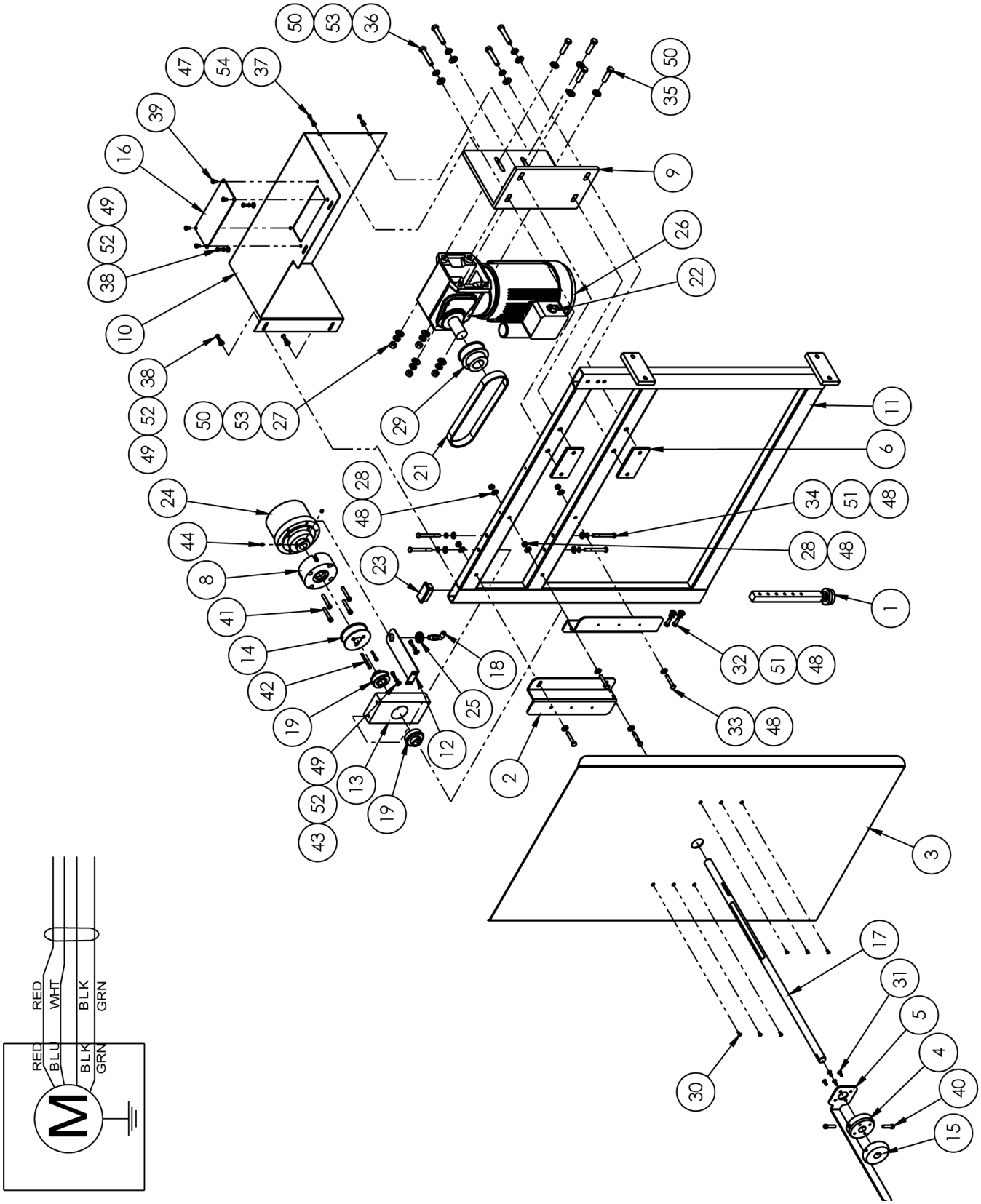
RED
WHT
BLK
GRN
RED
BLU
BLK
GRN
M

1961-320M Rewind Assembly, w/o Sleeve

AAC Drawing Number 9001619 Rev 5

NO.	QTY	PART #	DESCRIPTION	NO.	QTY	PART #	DESCRIPTION
1	1	26238	LEG SUB-ASSEMBLY	28	4	NNK1/4-20	NUT,HEX,KEP,1/4-20,W/LOCK
2	2	1334326	MOUNT, FLANGE	29	1	PP22LB075-1-1/8	PULLEY, GEAR, 3/8P, 22T
3	1	1334376	PLATE, REWIND,24 X 40	30	6	SSFC80024	6-32 X 3/8 FLAT CAP
4	1	1334388	HUB, TAKEUP SPINDLE	31	4	SSFC98032	10-32 X 1/2 FLAT ALLEN CAP
5	1	1334396	CATCH, MATL. TAKEUP REEL	32	2	SSHC01048	1/4-20 X 3/4 HEX CAP
6	2	1961-319	PLATE,NUT,3/8-16@3.00 CTC	33	4	SSHC01096	1/4-20 X 1-1/2 HHCS
7	*AR	1961-320SWD	WIRING DIAGRAM	34	4	SSHC01160	1/4-20 X 2-1/2 HHCS
8	1	1961-321	PLATE, ADAPTOR, AIR CLUTC	35	4	SSHC25096	3/8-16 X 1 1/2 HEX HEAD
9	1	1961-331	MOUNT,MOTOR	36	4	SSHC25128	3/8-16 X 2 HEX CAP
10	1	1961-332	COVER,MOTOR	37	2	SSPP90024	8-32X3/8 PAN PHLPS
11	1	1961-335	FRAME, PREFEED & REWIND A	38	4	SSPP98032	10-32 X 1/2 PAN PHIL
12	1	1961-354B	SUPPORT, AIR CLUTCH	39	4	SSPS95024	#10-24 X 1/4 PAN HD SLTD
13	1	1961-365B	BLOCK, BEARING MOUNT	40	2	SSSC01064	1/4-20 X 1 SOC CAP
14	1	1961-366A	PULLEY,CLUTCH,22 TH,3/8 P	41	4	SSSC01096	1/4-20 X 1-1/2 SOC CAP
15	1	1961-379	SUPPORT,REWIND SLEEVE	42	3	SSSC90064	#8-32 X 1 SOC CAP SC
16	1	1961104	COVER, INSPECTION	43	2	SSSC98032	10-32X1/2, SOC CAP
17	1	1962-375	SHAFT, AIR CLUTCH, MM8028	44	2	SSSS01016	1/4-20 X 1/4 KNURL PT
18	1	AAQMEL-5-8	QUICK MALE ELBOW,LONG	45	1	TT5802	TERMINAL RING, #10 STUD
19	2	BBS8703-88	BEARING,BALL,.75IDX1.75OD	46	3	W1061-3	NUT, WIRE
20	*12 FT	EE16-4	CABLE,4 COND,16 AWG, SJO	47	2	WWF8	WASHER, FLAT, #8
21	1	GG225L075	BELT, 3/8P, 60T, 3/4W	48	14	WWFS1/4	WASHER,FLAT,SAE,1/4
22	1	K-235A	CONNECTOR,ROMEX,3/4"	49	6	WWFS10	WASHER, FLAT, #10, SAE
23	1	MM132-1496	PLUG 1 X 2	50	12	WWFS3/8	WASHER,FLAT,SAE,3/8
24	1	MM802860	CLUTCH,AIR,3/4 BORE,4.5"D	51	6	WWL1/4	WASHER,LOCK,1/4
25	1	MM9600K21	GROMMET,RUBBER,9/16 ID	52	6	WWL10	WASHER,LOCK,#10
26	1	MMBH2LM22R	MOTOR,GEAR,R/A,220V	53	8	WWL3/8	WASHER, LOCK, 3/8
27	4	NNH3/8-16	NUT,HEX,3/8-16	54	2	WWL8	WASHER,LOCK,#8

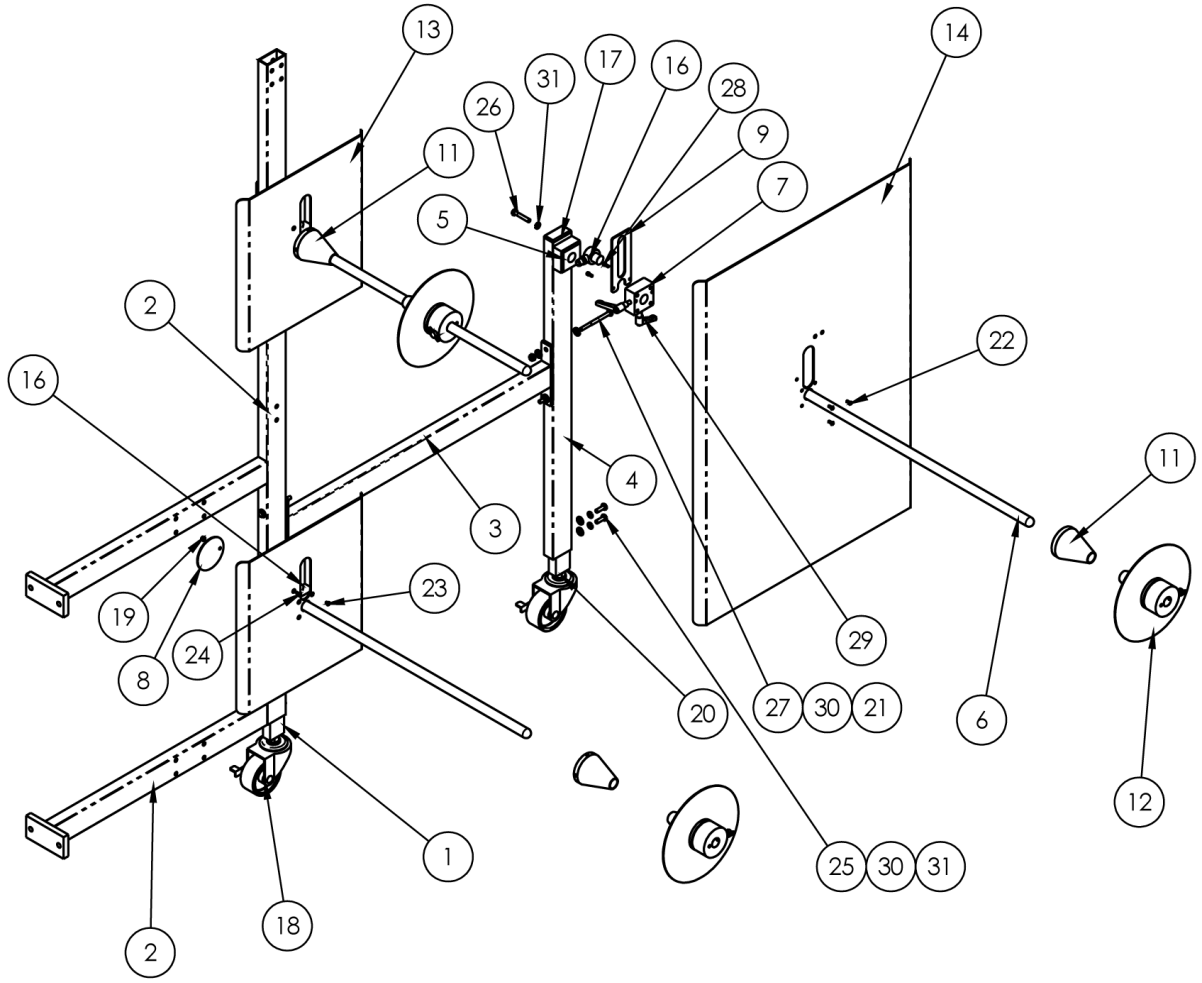

1961-KIT6B Prefeed Assembly, 3 Roll

AAC Drawing Number 9002669 Rev 5

NO.	QTY	PART #	DESCRIPTION	NO.	QTY	PART #	DESCRIPTION
1	2	132556-273A	LEG,3/4X1-1/20X8.25L	17	2	MM132-1496	PLUG 1 X 2
2	1	13553010	DUAL ROLL HOLDER	18	2	MM503022LB	CASTER, 3" LOCKING
3	1	13553011	EXTEND, ROLL HOLDER	19	2	NNE6-32	NUT,ELASTIC LOCK,6-32
4	1	13553014	TUBE, 1 X 2 X 29	20	2	NNH1/2-13	NUT,HEX,1/2-13
5	3	1961-251A	HUB, UNWIND SHAFT	21	4	NNK1/4-20	KEP NUT, 1/4-20
6	3	1961-252D	ROD, ROLL, 27" L	22	4	SSBC80024	6-32 X 3/16 BUT HEAD
7	3	1961-253A	HUB, UNWIND STAND	23	8	SSFC80016	SCR,FLAT HD,CAP,6-32 X 1/4
8	2	1961-254B	COVER, DUAL EYE	24	2	SSFC80024	6-32 X 3/8 FLAT CAP
9	3	1961-255	BRACKET, SENSOR MTG	25	4	SSHC01048	1/4-20 X 3/4 HEX CAP
10	AR	1961-265	TUBE, EXTENSION,14"	26	12	SSHC01096	1/4-20 X 1-1/2 HHCS
11	3	33008604	CONE, SPOOL	27	4	SSHC01192	HEX HEAD BOLTS, 1/4-20 X
12	3	33008708	BALL BEARING DISC ASSY	28	6	SSSC80024	6-32 X 3/8 SOC CAP SC
13	2	784B-1414	PLATE, ALU, 14' X 14"	29	6	TTH32415	HANDLE,THREADED,1/4-20X7/
14	1	784B-2436	PLATE, ALU, 23.75 X 31.75	30	12	WWFS1/4	WASHER,FLAT,SAE,1/4
15	1	FFRK44T4EX3A	CABLE,EXTENSION,3 WAY	31	16	WWL1/4	WASHER,LOCK,1/4
16	3	FFT18FF100Q	EYE,FIXED FIELD, 4IN				

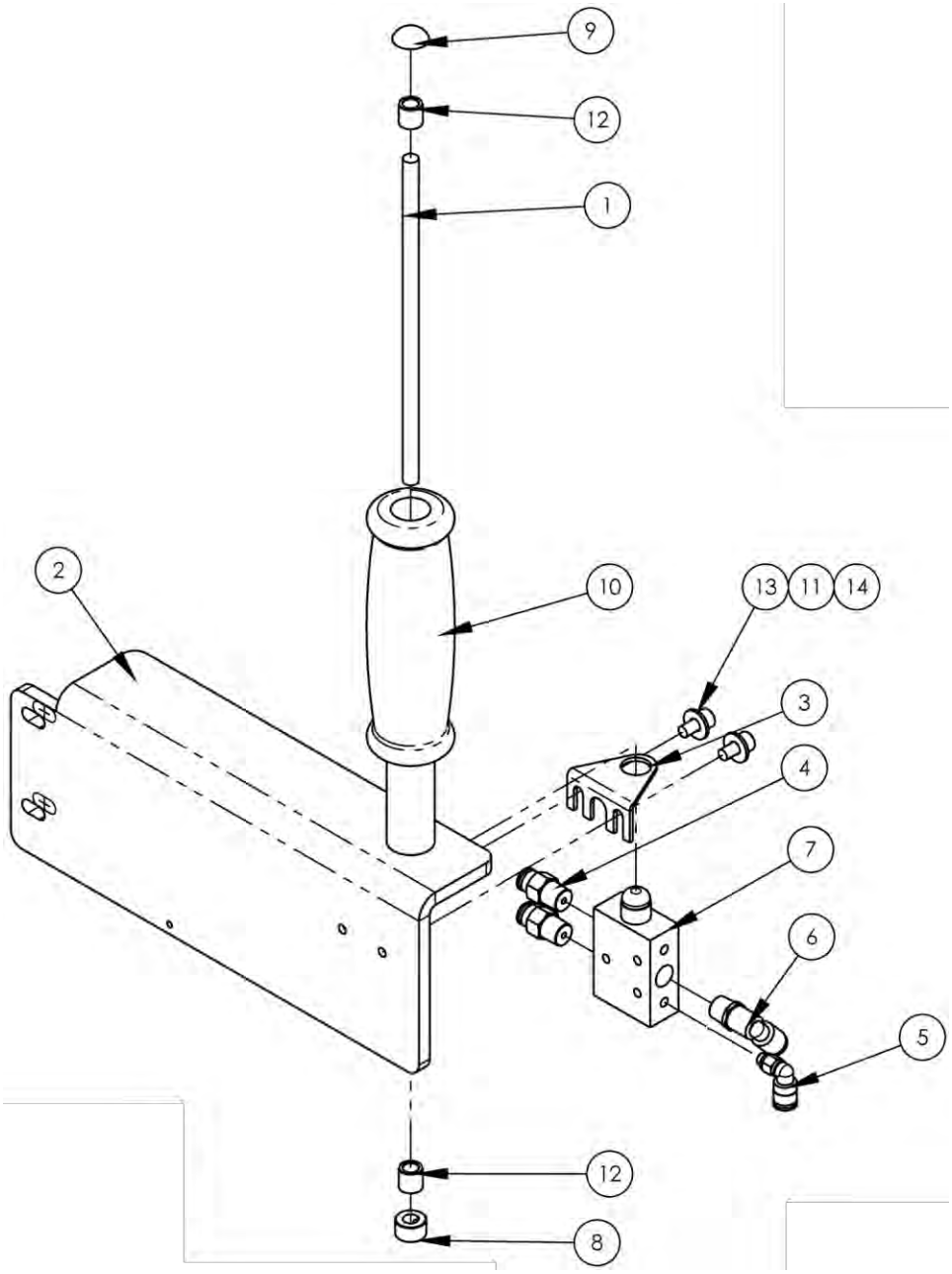

1366012 Handle Assembly

AAC Drawing Number 1366012 Rev 0

NO.	QTY	PART #	DESCRIPTION	NO.	QTY	PART #	DESCRIPTION
1	1	1320717	ROD,STR,JR,1/4X6.16L	8	1	CCSC41/4	COLLAR,SET 1/4"
2	1	1366013	WELDMENT, HANDLE	9	1	MM94802A029	NUT,PUSH CAP,1/4 ROD
3	1	AAF8-600	BRKT,MOUNTING	10	1	MMGP-105	GRIP HANDLE-FOAM 3/4 ID
4	2	AAQMC-5-8	QU. MALE CONN 5/32X1/8	11	2	SSHC98024	10-32 X 3/8 HEX CAP
5	1	AAQME-5-10	ELBOW, MALE,5/32X10-32	12	2	UUAA304-7	BEARING,BRONZE,.250ID
6	1	AAQME-5-8	QUICK MALE ELBOW	13	2	WWFS10	WASHER, FLAT, #10, SAE
7	1	AAV41-P	HUMPHREY VALVE,4 WAY	14	2	WWL10	WASHER,LOCK,#10

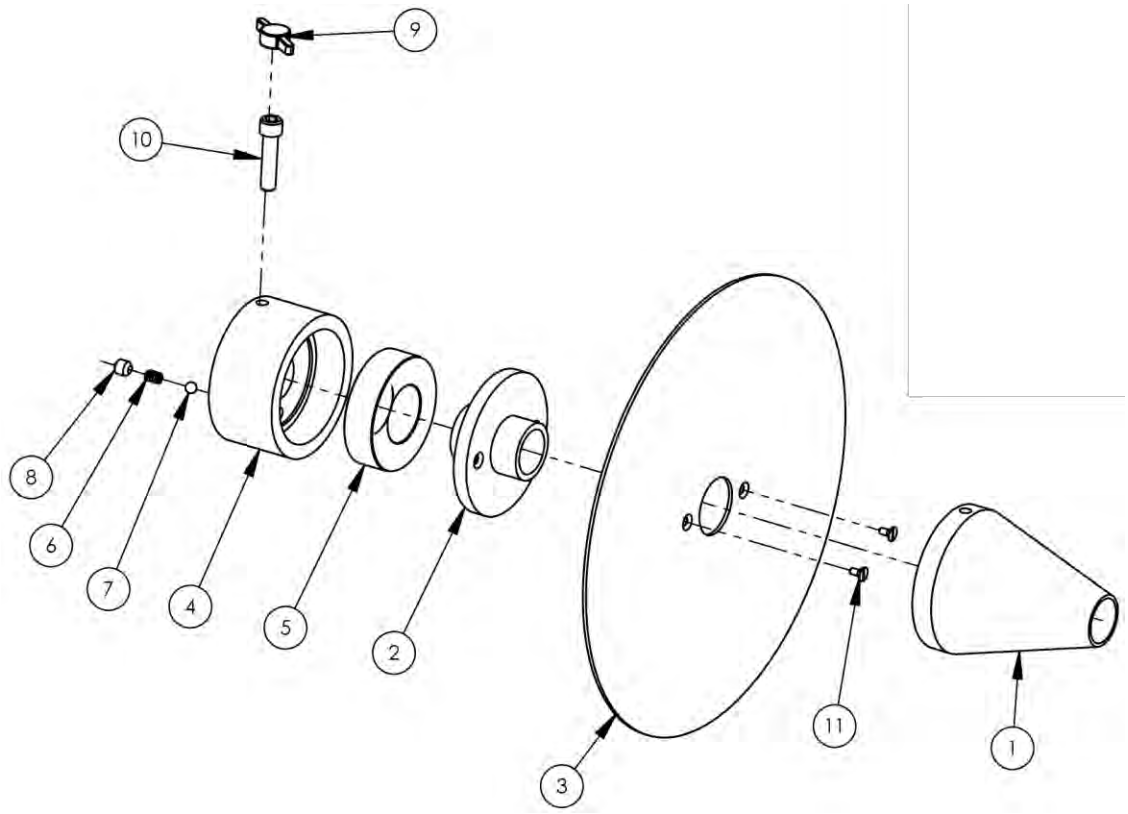

33008708 Ball Bearing Disc Assembly

AAC Drawing Number 9000904 Rev 4

NO.	QTY	PART #	DESCRIPTION
1	1	33008604	CONE, SPOOL
2	1	33008602	HUB, FLANGE 3/4 BORE
3	1	SEE CHART	SEE CHART
4	1	33008601	HUB, CENTER, 3/4 SHAFT
5	1	BB23216-88	BEARING,BALL,1.0B
6	1	RRLC026B1	SPRING,COMP .026X.18X.25
7	1	JJ012	3/16 DIA. BALL
8	1	SSSP01016	1/4-20 X 1/4 NYLOCK
9	1	SSW#1_4	WING SCREW KNOB
10	1	SSSC01064	1/4-20 X 1 SOC CAP
11	2	SSFS80016	6-32 X 1/4, FLAT SLOT

-	BALL BEARING	DISC ASSEMBLY	33008732
3	1	33008632	DISC 32" DIA
-	BALL BEARING	DISC ASSEMBLY	33008724
3	1	33008624	DISC 24" DIA
-	BALL BEARING	DISC ASSEMBLY	33008716
3	1	33008616	DISC 16" DIA
-	BALL BEARING	DISC ASSEMBLY	33008708

1366S-PD Pneumatic Diagram

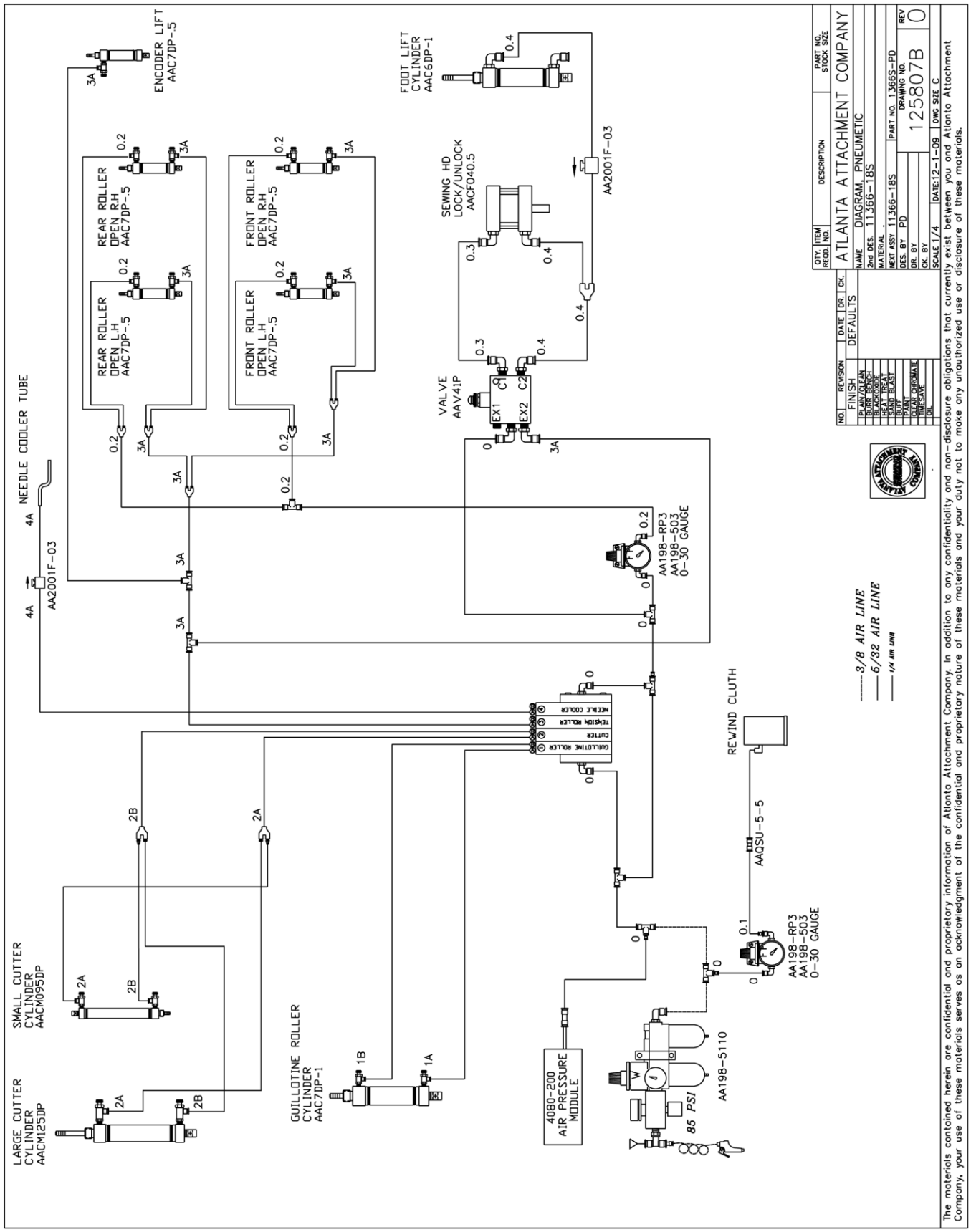

1366S-WD1 Wiring Diagram

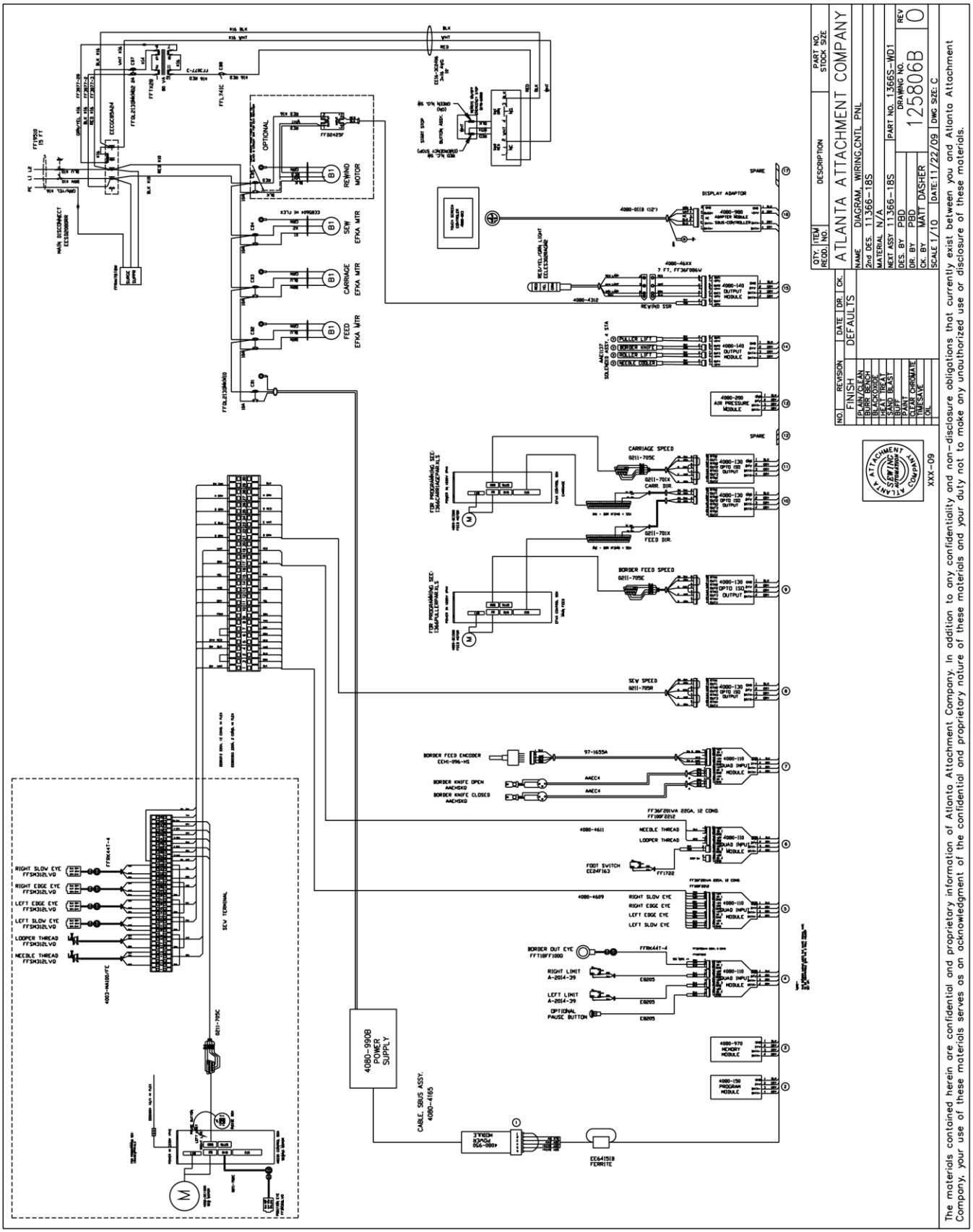

1961-320SWD Wiring Diagram

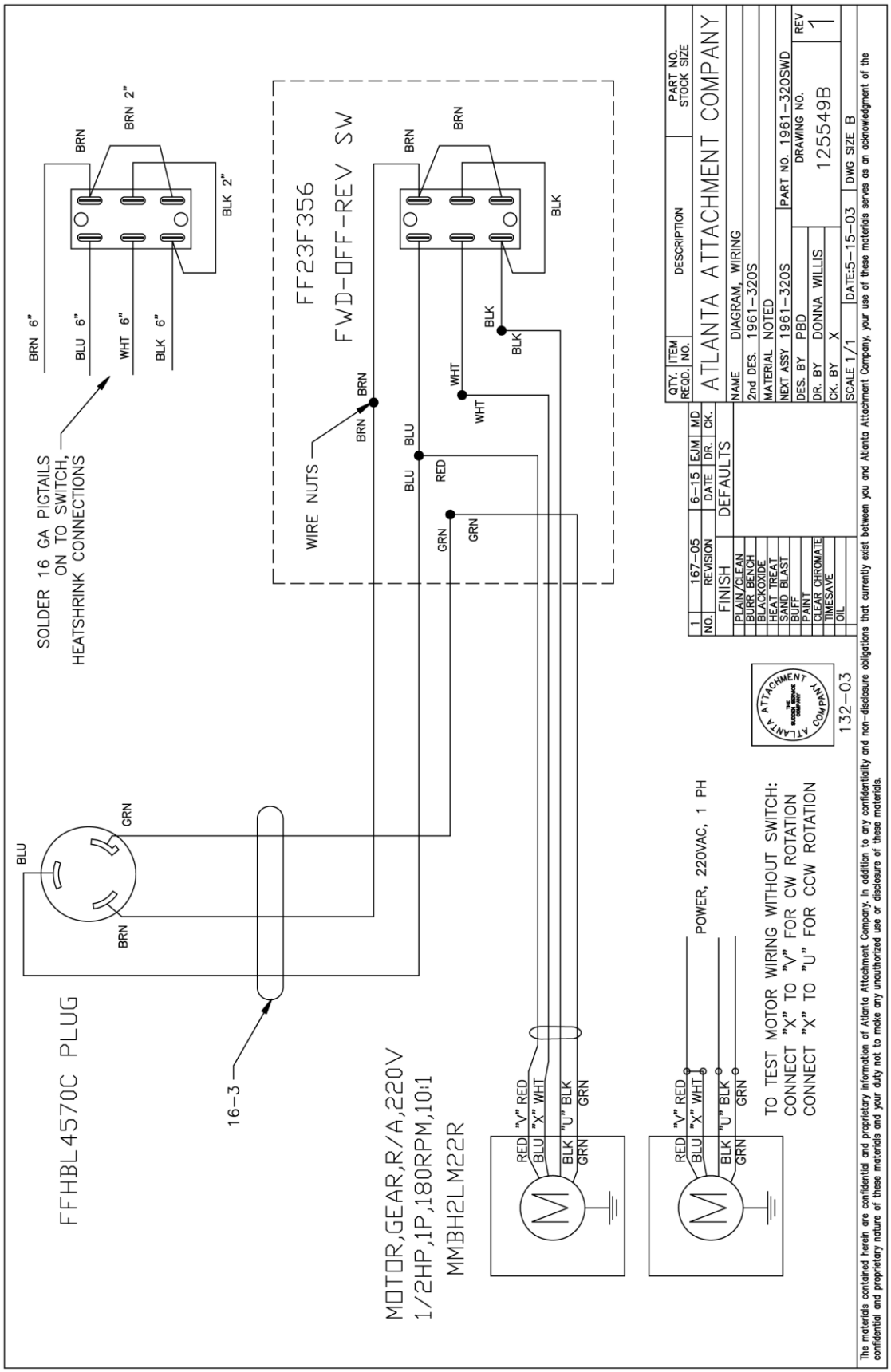

Atlanta Attachment Company (AAC) Statement of Warranty

Manufactured Products

Atlanta Attachment Company warrants manufactured products to be free from defects in material and workmanship for a period of eight hundred (800) hours of operation or one hundred (100) days whichever comes first. Atlanta Attachment Company warrants all electrical components of the Serial Bus System to be free from defects in material or workmanship for a period of thirty six (36) months.

Terms and Conditions:

- AAC Limited Warranty becomes effective on the date of shipment.
- AAC Warranty claims may be made by telephone, letter, fax or e-mail. All verbal claims must be confirmed in writing.
- AAC reserves the right to require the return of all claimed defective parts with a completed warranty claim form.
- AAC will, at its option, repair or replace the defective machine and parts upon return to AAC.
- AAC reserves the right to make the final decision on all warranty coverage questions.
- AAC warranty periods as stated are for eight hundred (800) hours or one hundred (100) days whichever comes first.
- AAC guarantees satisfactory operation of the machines on the basis of generally accepted industry standards, contingent upon proper application, installation and maintenance.
- AAC Limited Warranty may not be changed or modified and is not subject to any other warranty expressed or implied by any other agent, dealer, or distributor unless approved in writing by AAC in advance of any claim being filed.

What Is Covered

- Electrical components that are not included within the Serial Bus System that fail due to defects in material or workmanship, which are manufactured by AAC are covered for a period of eight hundred (800) hours.
- Mechanical parts or components that fail due to defects in material or workmanship, which are manufactured by AAC.
- Purchased items (sewing heads, motors, etc.) will be covered by the manufacturers (OEM) warranty.
- AAC will assist in the procurement and handling of the manufacturers (OEM) claim.

What Is Not Covered

- Parts that fail due to improper usage, lack of proper maintenance, lubrication and/or modification.
- Damages caused by; improper freight handling, accidents, fire and issues resulting from unauthorized service and/or personnel, improper electrical, plumbing connections.
- Normal wear of machine and parts such as Conveyor belts, "O" rings, gauge parts, cutters, needles, etc.
- Machine adjustments related to sewing applications and/or general machine operation.
- Charges for field service.
- Loss of time, potential revenue, and/or profits.
- Personal injury and/or property damage resulting from the operation of this equipment.

Declaración de Garantía

Productos Manufacturados

Atlanta Attachment Company garantiza que los productos de fabricación son libres de defectos de material y de mano de obra durante un período de ochocientos (800) horas de operación o cien (100) días, cual llegue primero. Atlanta Attachment Company garantiza que todos los componentes del Serial Bus son libres de defectos de material y de mano de obra durante un periodo de treinta y seis (36) meses.

Términos y Condiciones:

- La Garantía Limitada de AAC entra en efecto el día de transporte.
- Reclamos de la Garantía de AAC pueden ser realizados por teléfono, carta, fax o correo electrónico. Todo reclamo verbal tiene que ser confirmado vía escrito.
- AAC se reserva el derecho de exigir el retorno de cada pieza defectuosa con un formulario de reclamo de garantía.
- AAC va, según su criterio, a reparar o reemplazar las máquinas o piezas defectuosas devueltas a AAC.
- AAC se reserva el derecho para tomar la decisión final sobre toda cuestión de garantía.
- Las garantías de AAC tiene una validez de ochocientas (800) horas o cien (100) días, cual llega primero.
- AAC garantiza la operación satisfactoria de sus máquinas en base de las normas aceptadas de la industria siempre y cuando se instale use y mantenga de forma apropiada.
- La garantía de AAC no puede ser cambiada o modificada y no está sujeto a cualquier otra garantía implicada por otro agente o distribuida al menos que sea autorizado por AAC antes de cualquier reclamo.

Lo Que Está Garantizado

- Componentes eléctricos que no están incluidos dentro del sistema Serial Bus que fallen por defectos de materiales o de fabricación que hayan sido manufacturados por AAC, son garantizados por un período de ochocientas (800) horas.
- Componentes mecánicos que fallen por defectos de materiales o de fabricación que hayan sido manufacturados por AAC, son garantizados por un período de ochocientas (800) horas.
- Componentes comprados (Motores, Cabezales) son protegidos debajo de la garantía del fabricante.
- AAC asistirá con el manejo de todo reclamo de garantía bajo la garantía del fabricante.

Lo Que No Está Garantizado

- Falla de repuestos a raíz de uso incorrecto, falta de mantenimiento, lubricación o modificación.
- Daños ocurridos a raíz de mal transporte, accidentes, incendios o cualquier daño como resultado de servicio por personas no autorizados o instalaciones incorrectas de conexiones eléctricas o neumáticas.
- Desgaste normal de piezas como correas, anillos de goma, cuchillas, agujas, etc.
- Ajustes de la máquina en relación a las aplicaciones de costura y/o la operación en general de la máquina.
- Gastos de Reparaciones fuera de las instalaciones de AAC
- Pérdida de tiempo, ingresos potenciales, y/o ganancias.

Daños personales y/o daños a la propiedad como resultado de la operación de este equipo

Atlanta Attachment Company
362 Industrial Park Drive
Lawrenceville, GA 30046
770-963-7369
www.atlatt.com

Printed in the USA