Model **1349**

Revision 4.6 Updated July 17, 2016

Technical Manual & Parts Lists

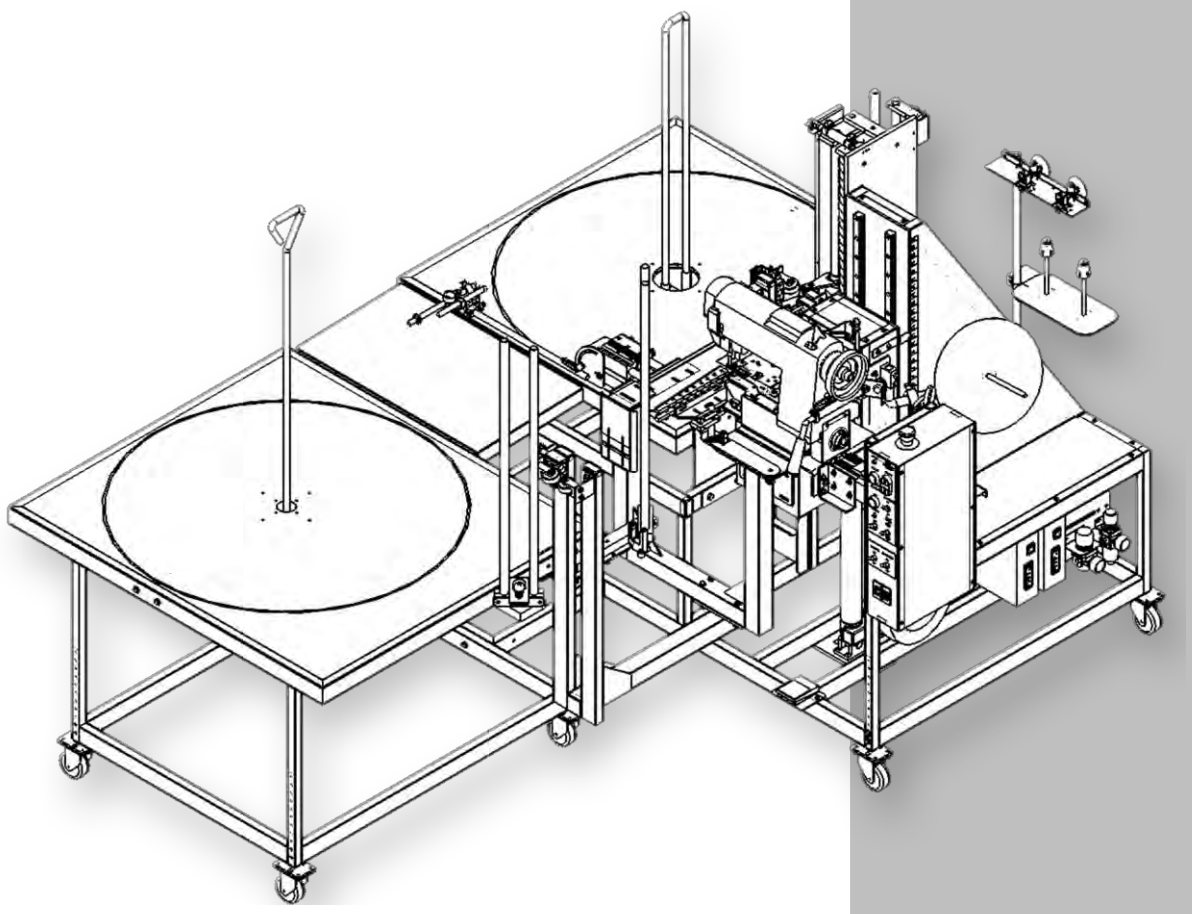

Atlanta Attachment Company

362 Industrial Park Drive

Lawrenceville, GA 30046

770-963-7369 • www.atlatt.com

ATLANTA ATTACHMENT COMPANY, INC.

Confidential and Proprietary Information

The materials contained herein are confidential and proprietary information of Atlanta Attachment Company. In addition to any confidentiality and non-disclosure obligations that currently exist between you and Atlanta Attachment Company, your use of these materials serves as an acknowledgment of the confidential and proprietary nature of these materials and your duty not to make any unauthorized use or disclosure of these materials.

All materials contained herein are additionally protected by United States Copyright law and may not be used, disclosed, reproduced, distributed, published or sold without the express written consent of Atlanta Attachment Company, which consent may be withheld in Atlanta Attachment Company's sole discretion. You may not alter or remove any copyright, trademark or other notice from copies of these materials.

IMPORTANT

It is important to read and understand the information contained within this manual before attempting to operate the machine. Atlanta Attachment Co., Inc. shall not be held liable for damage resulting from misuse of the information presented within, and reserves the right to change the information contained within, without prior notification.

Contents

Important Safety Instruction 1
Liability 2
Safety Equipment on the Machines 3
Protective Eyewear 4
Important Notices 5
Maintenance 7
Repair 8
A Word to the End User 9
Safety Precautions 9
General Machine Data 10
Features 10
Specifications 10
Installation 10
Operating Procedure 11
Controls and Adjustments 13
Front of Control Box 13
Rear of Control Box 13
Electric Eye Sensor Adjustment 14
Reflective Tape Maintenance 14
Threading the Thread Break Sensors 14
Troubleshooting 15
Efka Motor Parameter Settings 16
Efka Motor Parameter Settings (Puller Motor) 17
Servicing the Sew Head 18
Installation 18
Lubrication 19
Setting the Needle 20
Threading the Machine 21
Upper Threading 21
Lower Threading 21
Threading the Loopers 22
Tension 22
Pressure 22
Presser Foot Pressure 22
Alternating Pressers 22
Alternating Presser with Pneumatic Pressure Control 23

Upper Feed Roll Pressure 23
Stitch Length 23
Machine with Puller Feed 24
Presser Bar Lift 24
Machines with Alternating Pressers 25
Setting the Height of Feed Bar 26
Centralizing the Feed Dog 26
Setting the Height of the Feed Dog 26
Timing the Feed Lift Eccentric 27
Needle Bar Positioning 27
Positioning the Loop Deflectors 27
Setting the Distance from the Looper to the Needle 28
Sidewise Setting 28
Lengthwise Setting & Setting the Height of the Needle Bar 28
Timing Looper Driving Crank 29
Setting the Needle Guards 29
Positioning Spreader 30
Sidewise and Height Setting 30
Changing Movement of Spreader 30
Adjusting Needle Thread Take-Up 31
Adjusting Needle Thread Tension Releaser 31
Adjusting Looper Thread Take-Up 31
Singer® 300UX6 Assembly Drawings & Parts Lists 33
Upper Shaft Assembly 35
Front Assembly Sewing Arm 37
External Parts Sewing Arm #1 39
Lower Shaft Assembly 41
Front Assembly Sewing Bed 43
Cross Shaft in Sewing Bed 45
External Parts Sewing Arm #2 47
External Parts Sewing Arm #3 49
External Parts Sewing Arm #4 51
External Parts Sewing Arm #5 53
Assembly Drawings & Parts Lists 55
11349S88B Auto Faux Hemmer 57
1349084 Yoke Assembly 59
1349090 Thread Stand Assembly 60

1349345 Rewinder Receiver Assembly 61
1349156 Pneumatic Panel Assembly 63
1349228 Flange Guide Assembly 65
1349272 Folder Adjustment Assembly 67
1349279 Puller Motor Assembly 68
1349284 Pin Guide Assembly 69
1349297 Idler Transfer Assembly 71
1349300 Puller Assembly 73
1349320 Sew Head Mount Assembly 75
1349340 Rewind Table Assembly 77
1349355 Rewind Clutch Assembly 79
1349370 Flange/Fold Blade Assembly 81
1349395 Tape Roll Holder Assembly 82
1349438 Rewind Spindle Assembly 83
1349400 Control Box Assembly 85
1349410 Sew Head Assembly 88
1349455 Infeed Table Assembly 90
1349480 Tensionless Unwind Assembly 92
1349495 Rear Edge Sensor Assembly 94
1349500 Main Console Assembly 96
1349514 Front Edge Guide Assembly 98
1345-500 Footlift Pivot Link Assembly 99
F221-T004 Swing Out Assembly 100
1349B-PD Pneumatic Diagram 101
1349B-WD Wiring Diagram 102

Important Safety Instruction

This part of the Instruction Material is provided for the safe use of your equipment. It contains important information to help work safely with the unit and describes the dangers inherent in machinery. Some of these dangers are obvious, while others are less evident.

Mandatory Information

All persons operating and/or working on the 1349S88B Auto Faux Hemmer with Flanging should read and understand all parts of the Safety Instructions. This applies, in particular, for persons who only operate and/or work on the unit occasionally (e.g. for maintenance and repair). Persons who have difficulty reading must receive particularly thorough instruction.

Scope of the Instruction Material

- The Instruction Material comprises:
- Safety information
- Operator Instructions
- Electrical and Pneumatic diagrams

And may also include;

- A list of recommended spare parts
- Instruction Manual(s) for components made by other manufacturers
- The layout and installation diagram containing information for installation

Intended Use

Our machines are designed and built in line with the state of the art and the accepted safety rules. However, all machines may endanger the life and limb of their users and/or third parties and be damaged or cause damage to other property, particularly if they are operated incorrectly or used for purposes other than those specified in the Instruction Manual.

Exclusion of Misuse

Non-conforming uses include, for example, using the equipment for something other than it was designed for, as well as operation without duly installed safety equipment. The risk rests exclusively with the end user.

Conforming use of the machine includes compliance with the technical data, information and regulations in all parts of the complete Instruction Material, as well as compliance with the maintenance regulations. All local safety and accident prevention regulations must also be observed.

Liability

The machine should only be operated when in perfect working order, with due regard for safety and the potential dangers, as well as in accordance with the Instruction Material. Faults and malfunctions capable of impairing safety should be remedied immediately. We cannot accept any liability for personal injury or property damage due to operator errors or non-compliance with the safety instructions contained in this booklet. The risk rests exclusively with the end user.

The Instruction Material should always be kept near the machine so that it is accessible to all concerned.

The local, general, statutory and other binding regulations on accident prevention and environmental protection must also be observed in addition to the Instruction Material. The operating staff must be instructed accordingly. This obligation also includes the handling of dangerous substances and provision/use of personal protective equipment.

The Instruction Material should be supplemented by instructions, including supervisory and notification duties with due regard for special operational features, such as the organization of work, work sequences, the personnel deployed, etc.

The personnel's awareness of the dangers and compliance with the safety regulations should be checked at irregular intervals.

Choice and Qualification of Personnel

Ensure that work on the machine is only carried out by reliable persons who have been appropriately trained for such work - either within the company, by our field staff or at our office - and who have not only been duly appointed and authorized, but are also fully familiar with the local regulations. Work on the machine should only be carried out by skilled personnel, under the management and supervision of a duly qualified engineer.

This not only applies when the machine is used for production, but also for special work associated with its operation (start-up and maintenance), especially when it concerns work on the hydraulic or electrical systems, as well as on the software/serial bus system.

Training

Everyone working on or with the machine should be duly trained and informed with regard to correct use of the safety equipment, the foreseeable dangers which may arise during operation of the machine and the safety precautions to be taken. In addition, the personnel should be instructed to check all safety mechanisms at regular intervals.

Responsibilities

Clearly define exactly who is responsible for operating, setting-up, servicing and repairing the machine. Define the responsibilities of the machine operator and authorize him to refuse any instructions by third parties if they run contrary to the machine's safety. This applies in particular for the operators of machines linked to other equipment. Persons receiving training of any kind may only work on or with the machine under the constant supervision of an experienced operator. Note the minimum age limits permitted by law.

A Word to the Operator

The greatest danger inherent in our machines:
is that of fingers, hands or loose clothing being drawn into a machine by live, coasting or rotating tools or assemblies or of being cut by sharp tools or burned by hot elements.

ALWAYS BE CONSCIOUS OF THESE DANGERS!

Safety Equipment on the Machines

All machines are delivered with safety equipment, which shall not be removed or bypassed during operation.

The correct functioning of safety equipment on machines and systems should be checked every day and before every new shift starts, after maintenance and repair work, when starting up for the first time and when restarting (e.g. after prolonged shutdowns).

If safety equipment has to be dismantled for setting-up, maintenance or repair work, such safety equipment shall be replaced and checked immediately upon completing the maintenance or repair work. All protective mechanisms shall be fitted and fully operational whenever the machine is at a standstill or if it has been shut down for a longer period of time.

Damage

If any changes capable of impairing safety are observed in the machine or its mode of operation, such as malfunctions, faults or changes in the machine or tools, appropriate steps must be taken immediately, the machine switched off and a proper lockout tagout procedure followed. The machine should be examined for obvious damage and defects at least once per shift. Damage found shall be immediately remedied by a duly authorized person before resuming operation of machine.

The machine should only be operated when in perfect working order and when all protective mechanisms and safety equipment, such as detachable protective mechanisms, emergency STOP systems, etc. are in place and operational.

Faults or Errors

The machine must be switched off and all moving or rotating parts allowed to come to a standstill and secured against accidental restart before starting to remedy any faults or errors.

Signs on the Machine

Safety and danger signs on the machine should be observed and checked at regular intervals to ensure that they are complete and undamaged. They should be clearly visible and legible at all times.
Clothing, Jewelry, Protective Equipment
Long loose hair, loose-fitting clothes, gloves and jewelry, including rings, should be avoided in order to avoid injuries due to being caught, drawn in and wound up inside the machine.

Protective Eyewear

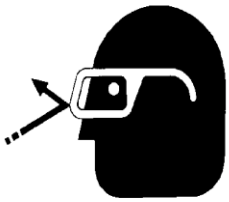

Protective eyewear that has been tested by the local authorities should be worn whenever there is a possibility of loose or flying objects or particles such as when cleaning the machine with compressed air.

Tools

Always count the number of tools in your possession before starting work on the machine. This will allow you to check that no tools have been left behind inside the machine. Never leave a tool in the machine while working.

Oils, Lubricants, Chemicals

Note the applicable safety regulations for the product used.

No Smoking, Fire, Explosion Hazard

Smoking and open flame (e.g. welding work) should be prohibited in the production area due to the risk of fire and explosions.

Workplace

A clear working area without any obstructions whatsoever is essential for safe operation of the machine. The floor should be level and clean, without any waste.

The workplace should be well lit, either by the general lighting or by local lights.

Emergency STOP

The emergency STOP buttons bring all machine movements to a standstill. Make sure you know exactly where they are located and how they work. Try them out. Always ensure easy access to the nearest emergency STOP button while working on the machine.

First Aid

1. Keep calm even when injured.
2. Clear the operator from the danger zone. The decision of what to do and whether to seek additional assistance rests entirely with you, particularly if someone has been trapped.
3. Give First Aid. Special courses are offered by such organizations as the employers' liability insurance association. Your colleagues should be able to rely on you and vice versa.
4. Call an ambulance. Do you know the telephone numbers for the ambulance service, police and fire service?

Important Notices

Reporting and Fighting Fires

Read the instructions posted in the factory with regard to reporting fires and the emergency exits. Make sure you know exactly where the fire extinguishers and sprinkler systems are located and how they are operated. Pass on the corresponding information to the firemen when they arrive. Ensure there are enough signs to avoid fire hazards.

The following fire extinguishers may be used:
- Dry powder extinguishers, ABC fire-extinguishing powder.
- Carbon dioxide fire extinguishers to DIN 14461 for electronic components. Great care must be exercised when using carbon dioxide fire extinguishers in confined, badly ventilated rooms (see DIN 14406 and 14270).

Isolate the machine from the power supply if a fire breaks out. Do not use water on burning electrical parts until it is absolutely certain that they have been completely disconnected from the power supply. Burning oils, lubricants, plastics and coatings on the machine can give off gases and vapors that may be harmful to your health.
A qualified person should be consulted to repair the damage after a fire.

Electrical Power Supply

Before undertaking any maintenance or repair work on the machine, switch off the electrical power to the machine at the main source and secure it with a padlock so that it cannot be switched on again without authorization.
In practice, this may mean that the technician, electrician and operator all attach their own padlock to the master switch simultaneously so that they can carry out their work safely. Locking extension plates should be available for multiple locks if required. The primary purpose for a lockout/tagout procedure is to protect workers from injury caused by unexpected energizing or start-up of equipment.

Energy sources (electrical/pneumatic/hydraulic, etc.) for the equipment shall be turned off or disconnected and the switches locked or labeled with a warning tag. It is the responsibility of the employer to establish control procedures. Follow lockout/tagout procedures before, setup and/or any service or maintenance work is performed, including lubrication, cleaning or clearance of jams.

Caution: The machine is still not completely de-energized even when the master switch is off.

- Electricity - The machine is always isolated from the electrical power supply whenever the master switch has been switched off. However, this does not apply for the power supply in the control cabinet, nor for equipment that does not draw its power via the master switch.

- Pneumatic / hydraulic energy - Almost all our machines carry compressed air. In addition to switching off the master switch, the air supply must also be disconnected and the machine checked to ensure it is depressurized before starting any work on the machine; otherwise the machine may execute uncontrolled movements.

- Kinetic energy - Note that some motors or spindles, for example, may continue to run or coast run on after being switched off.

- Potential energy - Individual assemblies may need to be secured if necessary for repair work.

Delivery of the Machine/Packaging

Note any markings on the packaging, such as weights, lifting points and special information. Avoid temperature fluctuations. Condensation may damage the machine.

Transport Damage

The packaging and machine must immediately be examined for signs of damage in transit. Such damage must be reported to the shipper/transporter within the applicable time limits. Contact Atlanta Attachment Company and/or your transport insurer immediately, if signs of damage are visible. Never operate a damaged machine.

Interim Storage

If the machine has to be stored temporarily, it must be oiled or greased and stored in a dry place where it is protected from the weather in order to avoid damage. A corrosion-inhibiting coating should be applied if the machine has to be stored for a longer period of time and additional precautions taken to avoid corrosion.

Transporting the Machine

Disconnect the machine from all external connections and secure any loose assemblies or parts. Never step under a suspended load. When transporting the machine or assemblies in a crate, ensure that the ropes or arms of a forklift truck are positioned as close to the edge of the crate as possible. The center of gravity is not necessarily in the middle of the crate. Note the accident prevention regulations, safety instructions and local regulations governing transport of the machine and its assemblies.

Only use suitable transport vehicles, hoisting gear and load suspension devices that are in perfect working order and of adequate carrying capacity. Transport should only be entrusted to duly qualified personnel.

Never allow the straps to rest against the machine enclosure and never push or pull sensitive parts of the machine. Ensure that the load is always properly secured. Before or immediately after loading the machine, secure it properly and affix corresponding warnings.
All transport guards and lifting devices must be removed before the machine is started up again. Any parts that are to be removed for transport must be carefully refitted and secured before the machine is started up again.

Workplace Environment

Our machines are designed for use in enclosed rooms: Permissible ambient temperature approx. 5 - 40 °C (40 - 104 °F). Malfunctions of the control systems and uncontrolled machine movements may occur at temperatures outside this range.
Protect against climatic influences, such as electrostatic charges, lightning strikes, hail, storm damage, high humidity, salinity of the air in coastal regions.

Protect against influences from the surroundings: no structure-borne vibrations, no grinding dust, or chemical vapors.
Protect against unauthorized access.
Ensure that the machine and accessories are set up in a stable position.
Ensure easy access for operation and maintenance (Instruction Manual and layout diagram); also verify that the floor is strong enough to carry the weight of the machine.

Local Regulations

Particular attention must be paid to local and statutory regulations, etc. when installing machines and the plant (e.g. with regard to the specified escape routes). Note the safety zones in relation to adjacent machines.

Maintenance

General Safety Instructions

The machine shall be switched off, come to a standstill and be secured so that it cannot be switched on again inadvertently before starting any maintenance work whatsoever. Use proper lockout/tagout procedures to secure the machine against inadvertent startup.
Remove any oil, grease, dirt and waste from the machine, particularly from the connections and screws, when starting the maintenance and/or repair work. Do not use any corrosive-cleaning agents. Use lint-free rags.
Retighten all screw connections that have to be loosened for the maintenance and repair work. Any safety mechanisms that have to be dismantled for setting-up, maintenance or repair purposes must be refitted and checked immediately after completing the work.

Maintenance, Care, Adjustment

The activities and intervals specified in the Instruction Manual for carrying out adjustments, maintenance and inspections must be observed and parts replaced as specified.

All hydraulic and pneumatic lines should be examined for leaks, loose connections, rubbing and damage whenever the machine is serviced. Any defects found must be remedied immediately.

Waste, Disassembly, Disposal

Waste products should be cleared from the machine as soon as possible as not to create a fire hazard. Ensure that fuels and operating lubricants, as well as replacement parts are disposed of in a safe and ecologically acceptable manner. Note the local regulations on pollution control.

When scrapping (disassembling) the machine and its assemblies, ensure that these materials are disposed of safely. Either commission a specialist company familiar with the local regulations or note the local regulations when disposing of these materials yourself. Materials should be sorted properly.

Repair

Replacement Parts

We cannot accept any liability whatsoever for damage due to the use of parts made by other manufacturers or due to unqualified repair or modification of the machine.

Repair, Electrical

The power supply must be switched off (master switch off) and secured so that it cannot be switched on again inadvertently before starting any work on live parts.

Those parts of the machine and plant on which inspection, maintenance or repair work is to be carried out must be isolated from the power supply, if specified. The isolated parts must first be checked to determine that they are truly de-energized before being grounded and short-circuited. Adjacent live parts must also be isolated.

The protective measures implemented (e.g. grounding resistance) must be tested before restarting the machine after all assembly or repair work on electric parts.

Signal generators (limit switches) and other electrical parts on the safety mechanisms must not be removed or bypassed. Only use original fuses or circuit overloads with the specified current rating. The machine must be switched off immediately if a fault develops in the electrical power supply.

The electrical equipment of our machines must be checked at regular intervals and any defects found must be remedied immediately.

If it is necessary to carry out work on live parts, a second person should be on hand to operate the emergency OFF switch or master switch with voltage release in the event of an emergency. The working area should be cordoned off and marked by a warning sign. Only use electrically insulated tools.

Ventilation/Hazardous Gases

It is the end users responsibility to ensure adequate ventilation is provided to exhaust any and all noxious or hazardous gases that may be present in the working environment.

Hydraulic and Pneumatic Systems

Work on hydraulic or pneumatic equipment shall only be carried out by persons with training, knowledge and experience of hydraulic systems. Pressure lines shall be depressurized before starting any repair work.

General Liability

Liability for machine damage and personal injury is extinguished completely if any unauthorized conversions or modifications are undertaken. The machine must not be modified, enlarged or converted in any way capable of affecting safety without the manufacturer's prior approval.

Starting Machine Movements

Read the Instruction Manual carefully to establish which keys and functions start machine movements.

A Word to the End User

The end user has sole responsibility to enforce the use of safety procedures and guards on the machine. Any other safety devices or procedures due to local regulations should be should be retrofitted in accordance to these regulations and/or the EC Directive on the safety of machines.

Operator's position must always be readily accessible. Escape routes must always be kept clear and safety areas should be identified.

Safety Precautions

Safety should be a constant concern for everyone. Always be careful when working with this equipment. While normal safety precautions were taken in the design and manufacture of this equipment, there are some potential safety hazards.
Everyone involved with the operation and maintenance of this equipment should read and follow the instructions in this manual.
Operate the equipment only as stated in this manual. Incorrect use could cause damage to the equipment or personal injury.
It is the owner's responsibility to make certain that the operator reads and understands this manual before operating this equipment. It is also the owner's responsibility to make certain that the operator is a qualified and physically able individual, properly trained in the operation of this equipment.
Specific safety warning decals are located on the equipment near the immediate areas of potential hazards. These decals should not be removed or obliterated. Replace them if they become non-readable.

- ALWAYS keep safety shields and covers in place, except for servicing.
- ALWAYS operate equipment in daylight or with adequate working lights.
- Follow daily and weekly checklists, making sure hoses are tightly secured and bolts are tightened.
- ALWAYS watch and avoid holes or deep depressions.
- ALWAYS wear adequate eye protection when servicing the hydraulic system and battery.
- NEVER operate a poorly maintained machine.
- NEVER allow persons to operate this machine without proper instruction.
- NEVER put hands or feet under any part of the machine while it is running.
- NEVER attempt to make any adjustments or repairs to the machine while running. Repairs or maintenance should be performed by trained personnel only.
- NEVER work under the machine unless it is safely supported with stands, blocks or a hoist and blocks.
- NEVER touch hot parts of machine.

General Machine Data

Features

50 feet of material sewn per minute
Electrical lock out / tag out capability
Variable speed puller
Clutch motor driven rewinder
Turn off head for rewind use only
Foot pedal operation for manual sewing
Variable torque winding
Stops automatically when material runs out
Adjustable tensioning of material as it is fed into the system 30” material capacity

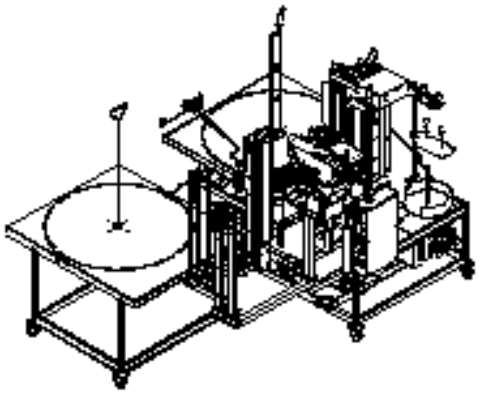

Specifications

Electrical:	220 VAC, 10A, 50/60 Hz Single Phase
Pneumatic:	70-80 PSI, 14 SCFM avg.
Sew Head:	Singer 300UX5
Needle:	SN62X5924
Stitch Density:	4-6 SPI
Speed:	2500 RPM
Weight:	Approx. 1500 lbs.
Dimensions:	6’ x 8’

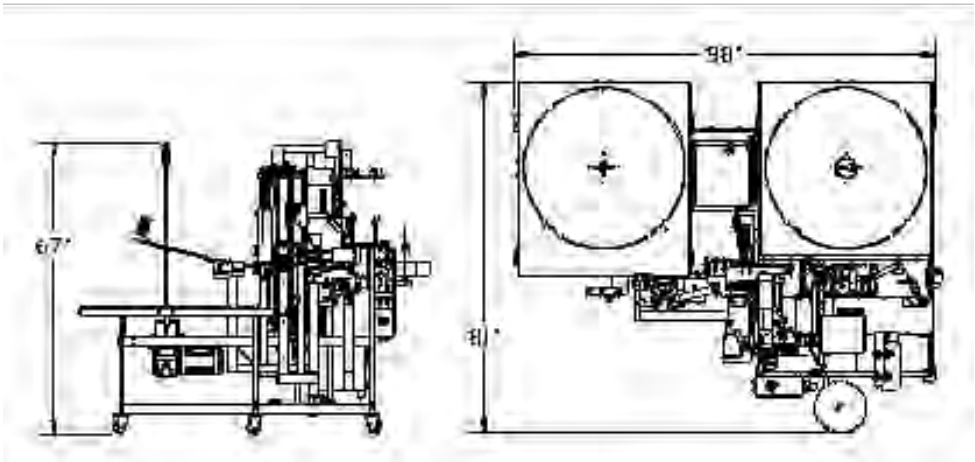

Installation

Position the machine in a desired location on a sound and reasonably level floor.
Make sure that there is sufficient lighting over the machine.
Remove all packing material.
Connect electrical power and compressed air as specified above.
Open the main control box door in front of the machine. Turn on the ON/OFF circuit breaker located in the top right corner by pressing the green button. The green light inside the button should illuminate.

Operating Procedure

Refer to Figures 1-3 on page 12 and 13 for component identification and location.

1. Load roll of border material onto infeed table (item 1).
2. Move the fold blade (item 2) to the out position and open the puller roller (item 3) using the flange guide toggle switch (item 4) located on the front of the main control box.
3. Feed border material through the front tension rod assembly (item 5), through the unwinder assy, through the puller assembly (item 6) and wrap around the rewind rod (item 7).
4. Use sew head lift button (item 8) to raise or lower head to desired seam location using scale (item 9) on side of the main frame. On a multiple seam border, always run the seam that is closest to the middle of the border first to ensure proper edge guiding of the border roll while it is being sewn.
5. With the foot up on the sewing head, move the fold blade to the in position and close the puller using the flange guide toggle switch.
6. Lower the foot using the manual footlift lever (item 10).
7. Use the manual sew pedal (item 11) to ensure smooth travel and rewind of border material.
8. Press the start button (item 12) until the sensor led (item 13) goes dark. The machine is now sewing in automatic mode.
9. When all the fabric has been sewn the fabric out sensor (item 14) will stop the machine.
10. When the machine stops, move the fold blade to the out position and raise the foot on the sewing head in order to remove the roll of sewn material.
11. Remove the roll by pulling the rewind rod out of the rewind table assembly (item 15).
12. Slide the roll over to the infeed table, flip the roll over and repeat the above steps if multiple seams are required.

Fig 1

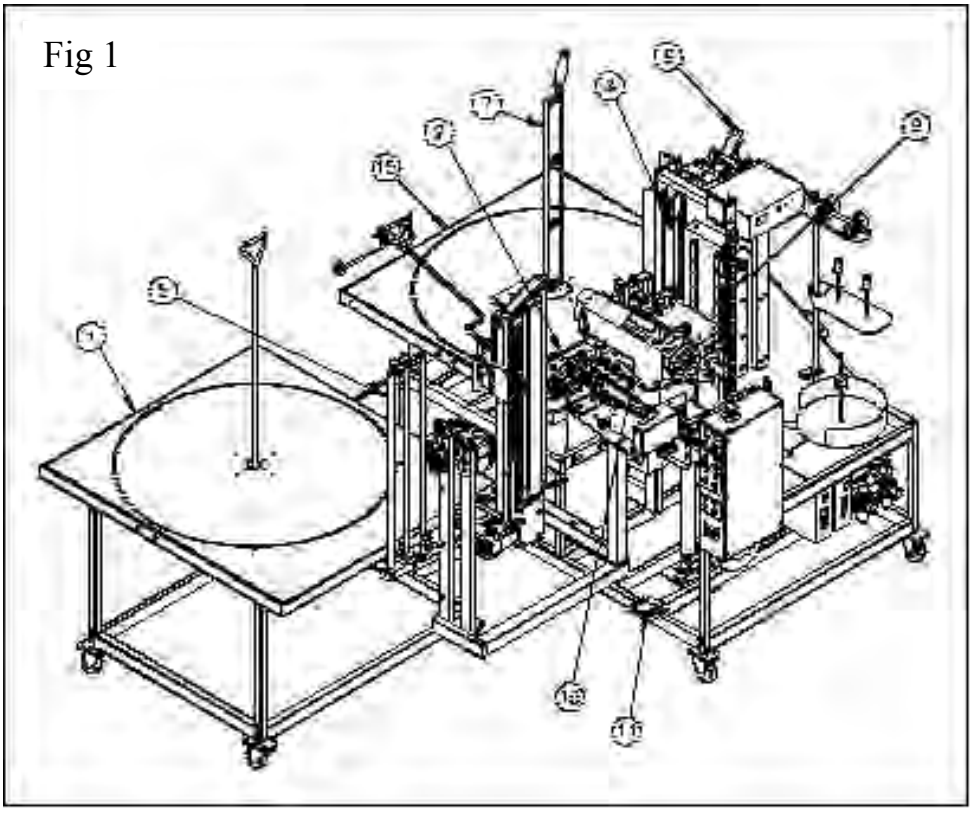

Fig 2

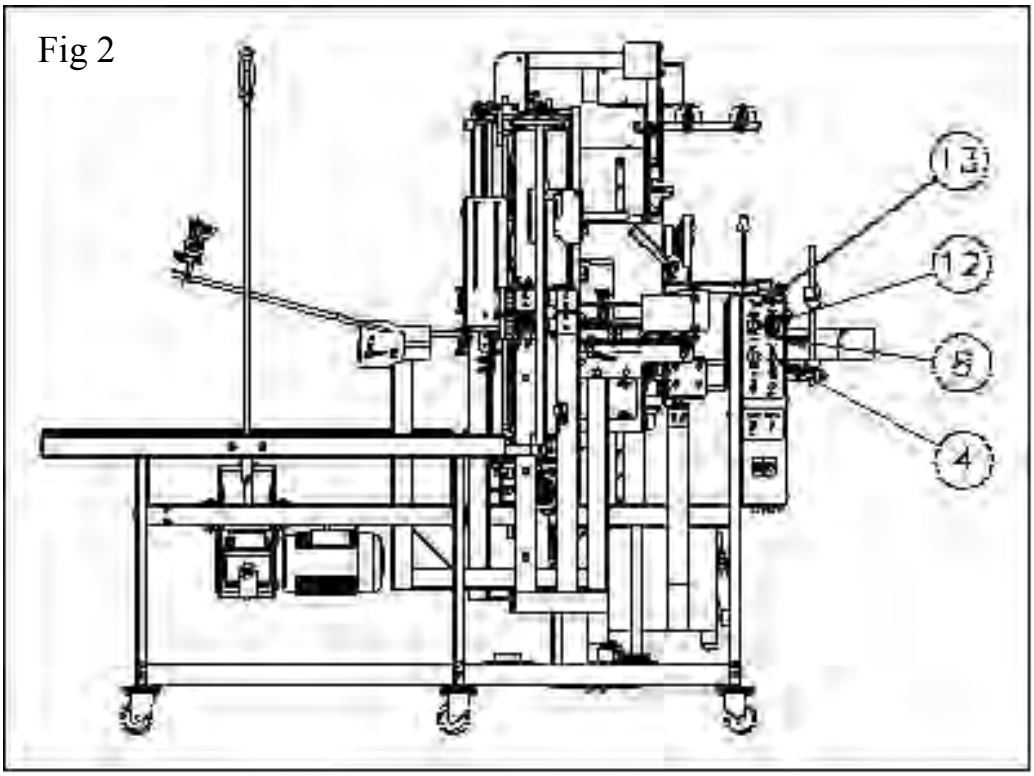

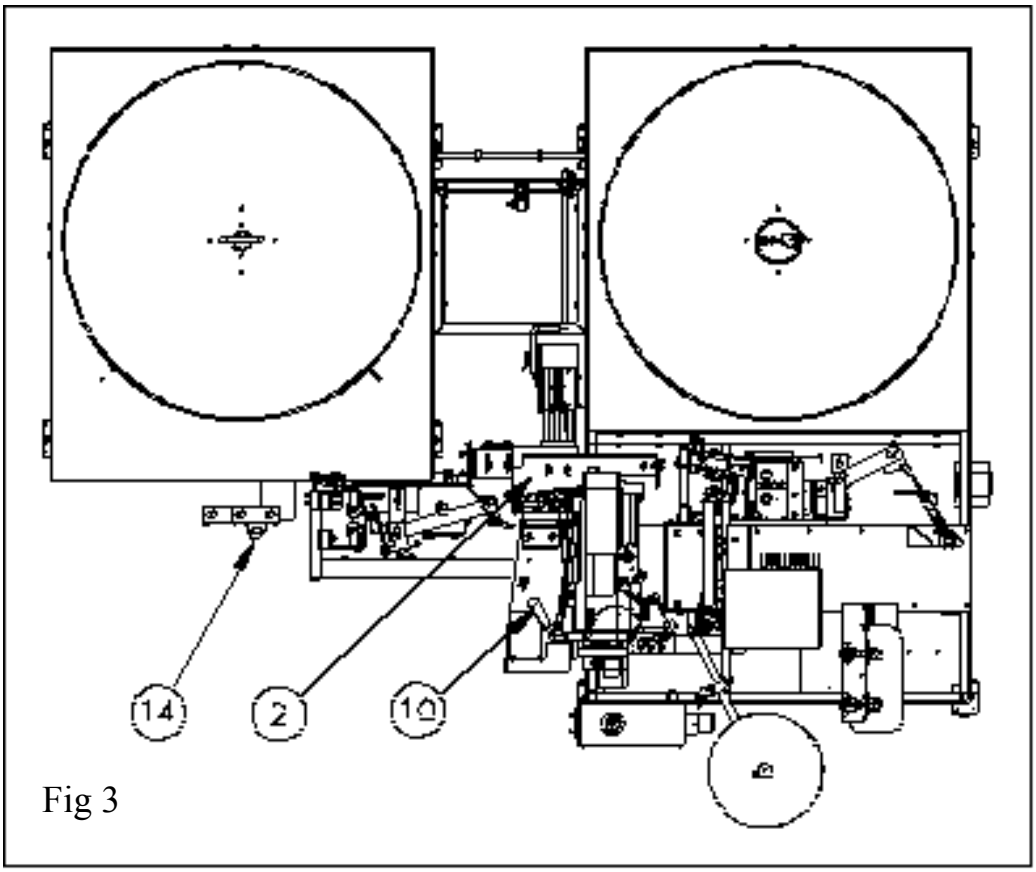

Fig 3

Controls and Adjustments

Front of Control Box

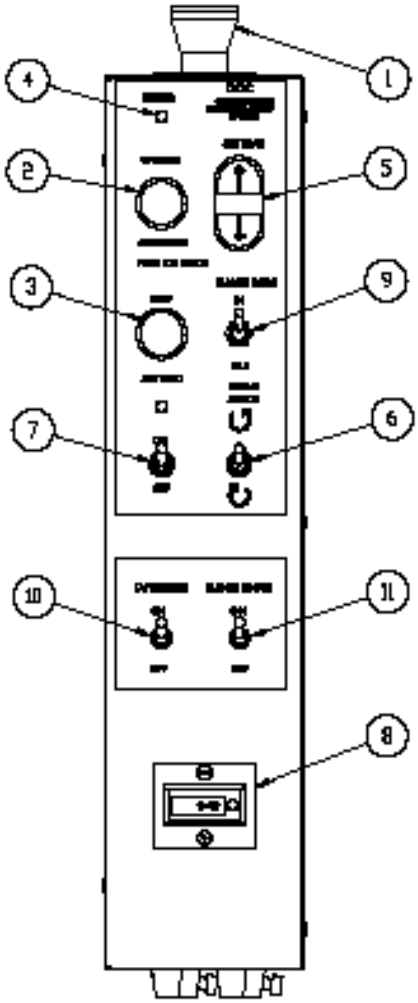

1**. Emergency Stop Button** - Pressing this button will turn off power to the machine. This button locks in and off when pressed. Twist to release; the machine will not start with this button in.

2. **On/Start Button** - Pressing this button once at power off will turn on power to the control circuits. The amber Sensor light should light indicating the power is on. Pressing this button with the Sensor light on will start the automatic operation and run the machine at full speed. After the Sensor light goes out the machine will stay on until the Stop button is pressed, the material runs out, or there is a thread break.

3. **Stop Button** - Pressing this button will stop the machine from sewing but does not disconnect power.

4. **Sensor Light** - This light is on whenever the thread break sensors are idle and when one or more of the material sensors are uncovered.
Note: Sensor light indicates trouble with thread breaks, material out sensors, or foot up sensor.

5. **Sew Head Lift Switch** - Moves the sew head up or down for desired seam location.
Note: Air supply must be on and fold blade must be out to allow moving the sew head up or down.

6. **Rewind Motor Direction Switch** - Sets the winding direction of the rewind motor either CW or CCW.

7. **Sew Head Switch** - Turns the sew head on or off. Indicator light is dark when sew head is on.

8. **Hour Meter** - Displays the total accumulated run time of the sewing heads in hours and Minutes.

9. **Flange Guide Switch** - Moves the fold blade in and out and opens and closes the puller roller, guide wheels, and feed rollers.

10. **Tape Sensor Switch** - Turns off the binding tape sensor when no binding is being used.

11. **Flange Sensor Switch** - Turns off the flange sensor when no flange is being used.

Rear of Control Box

Main power overload circuit breaker and lock-out/tag-out safety feature. This switch is usually left on all the time except when locking the machine power off for maintenance.

Electric Eye Sensor Adjustment

To adjust the sensor, first remove the clear plastic cover from the end of the sensor. There are two adjusting screws under the cover. One is labeled “GAIN” and is used to set the sensitivity of the sensor. The other screw is labeled “DO & LO” and should always be fully clockwise.

With the end of the sensor pointing at the center of the reflective tape, turn the “GAIN” screw counter-clockwise until the red LED indicator is off. Then turn the “GAIN” screw clockwise until the LED indicator comes on. Then turn the “GAIN” screw one full turn clockwise. The LED indicator should be blinking slowly. Cover the eye so that the sensor cannot see the reflective tape and the LED should go off.

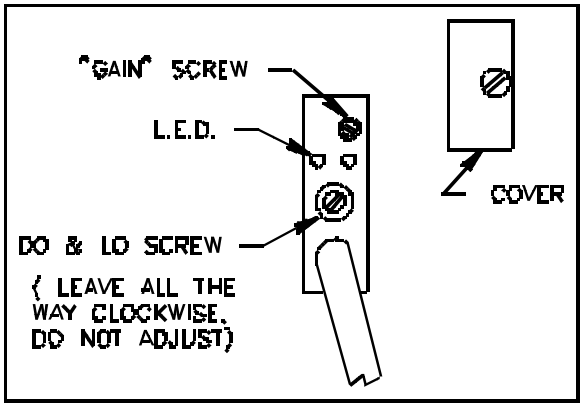

Reflective Tape Maintenance

Use a soft cloth for cleaning.
Do not use chemicals or abrasives to clean it.
Avoid any contact with oils and liquids.
Do not touch the tape with bare fingers.
If tape is dirty or opaque, the eye may not function correctly.

Threading the Thread Break Sensors

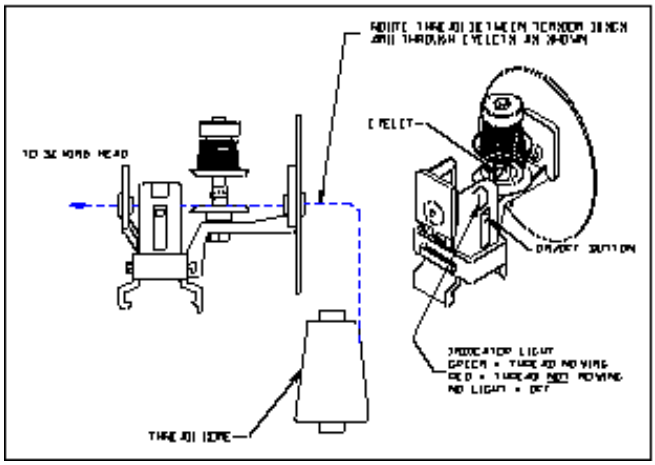

Troubleshooting

Machine doesn't continue to run after the start button is pressed for the second time (Power on LED will not go out):

1. The thread break detectors are threaded wrong or damaged. (See thread sensor instructions on page 7).
2. The fabric sensors are not properly aligned or damaged.

Machine will not stop after fabric runs out:

1. The fabric sensor is not properly aligned or damaged.
2. Reflective tape on handwheel is worn or is not at least 1 inch long.

Sewing head will not run:

1. Check head on/off switch on control box.
2. Check that all plugs on motor are plugged in securely.
3. Check motor control boxes for error codes.

Head sewing, but puller rollers not turning:

1. Puller motor control box should be turned on (see power light on control box). Check box for error codes.
2. Check belt going from motor to feed roller.
3. Check pulleys on motor and feed roller (set screws should be tight).

Head sewing, puller rollers turning, but cloth not being pulled through:

1. Check air pressure, should be 30-40 psi. Higher pressures may cause puller rollers to stall.
2. Check that flange guide switch is set for "in" position.
3. Check that threads on edge of cloth are not wrapped around roll rod.

Efka Motor Parameter Settings

The parameters below are pre-programmed before the unit is shipped.

When replacing or installing a new Efka Controller, perform a master reset of the parameters using the following instructions.

To Perform Master Reset of Parameters:

1. Power on holding down the "P" button till "COD" is displayed.
2. Press ">>" once and enter the number "5913"
3. Press "E" twice and "093" is displayed.
4. Press "+" once, "094" is displayed.
5. Press "P" to exit programming mode with all default values.

To modify the default parameters according to the table below, use the following instructions.

1. Power on holding down the "P" button till "COD" is displayed.
2. Press ">>" once and enter the number "3112"
3. Press "E" once and "2.0.0." is displayed this is a parameter
4. Proceed to the parameter to be changed and press "E"
5. The value now shows in the screen, adjust to desired value.
6. Press "E" to enter value and continue with parameter setting.
7. Repeat for other parameters, press "P" once when complete.
8. Run fusing head to save parameters before powering down

Parameter	Range	Value	Description
290		5	Mode Of Operation. MUST SET THIS PARAMETER FIRST!
111	200-9900rpm	2500	Maximum Speed when "129" is 0, 1, or 2
119	40911	1	Linear Acceleration
161	0-1	0=CW	Motor Rotation
240	0-31	7	Machine run blockage with closed contact
270	0-5	1	External handwheel sensor configuration
272	020-255	1000	Drive ratio between motor pulley and handwheel pulley. If handwheel pulley is smaller than motor pulley, increase this value to slow down sewing head until measured speed matches speed
26		0	
401		1	set with parameter 111. (For Yamato and Pegasus, setting should be 100; for Rimoldi, setting should be 124)

Front panel LED's:

LED 1:Off
LED 2:Off
LED 3:Off
LED 4:Off
LED 5:Off
LED 6:Off
LED 7:Off
LED 8:On, Stop at needle up

Efka Motor Parameter Settings (Puller Motor)

The parameters below are pre-programmed before the unit is shipped.

When replacing or installing a new Efka Controller, perform a master reset of the parameters using the following instructions.

To Perform Master Reset of Parameters:

1. Power on holding down the "P" button till "COD" is displayed.
2. Press ">>" once and enter the number "591"
3. Press "E" twice and "093" is displayed.
4. Press "+" once, “094" is displayed.
5. Press "P" to exit programming mode with all default values.

To modify the default parameters according to the table below, use the following instructions.

1. Power on holding down the "P" button till "COD" is displayed.
2. Press ">>" once and enter the number "311"
3. Press "E" once and "2.0.0." is displayed this is a parameter
4. Proceed to the parameter to be changed and press "E"
5. The value now shows in the screen, adjust to desired value.
6. Press "E" to enter value and continue with parameter setting.
7. Repeat for other parameters, press "P" once when complete.
8. Run fusing head to save parameters before powering down

Parameter	Range	Value	Description
290		0	Mode Of Operation. MUST SET THIS PARAMETER FIRST!
111	0-999	40	Maximum Speed when “129” is 0, 1, or 2
119	40911	1	Linear Acceleration
153	0-50	35	Braking power at standstill
161	0-1	0=CW	Motor Rotation
220	20090	5	Accelerating power of the drive
270	0-5	5	No handwheel sensor
272	020-255	160	Drive ratio between motor pulley and driven pulley. The larger the number, the slower the motor RPM.

Front panel LED's:

LED 1:Off
LED 2:Off
LED 3:Off
LED 4:Off
LED 5:Off
LED 6:Off
LED 7:Off
LED 8:On, Stop at needle up

Servicing the Sew Head

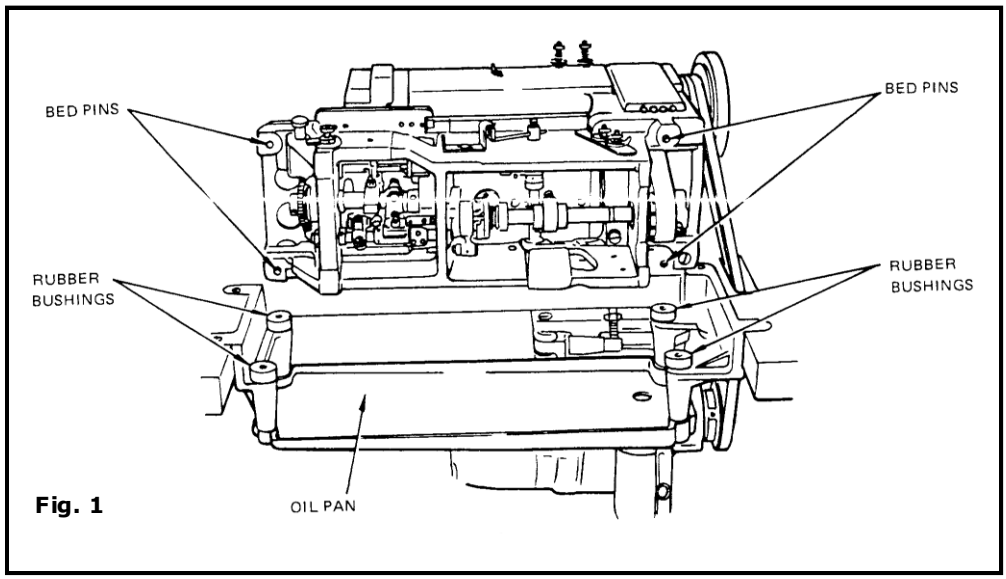

Fig. 1

Installation

Assemble the oil pan to the hangers. Insert the assembled oil pan into the machine cut-out table placing four rubber bushings in the hanger holes as shown in Fig. 1. Attach the oil drain jar to the oil pan as shown in Fig. 2.

Place the machine on the oil pan assembly with the four bed pins passing through the four rubber bushings shown in Fig. 1.

Connect the foot lifter treadle to the foot lifter lever, Fig. 3, at the back of the machine by chain furnished for this purpose.

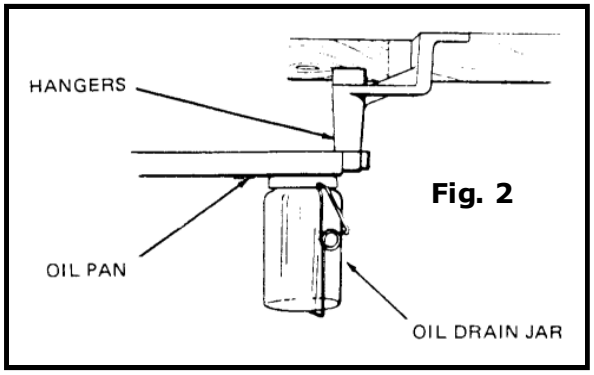

Fig. 2

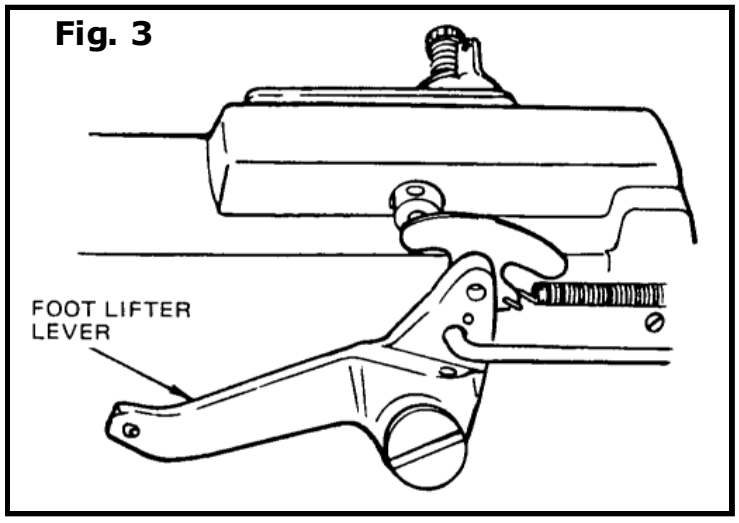

Fig. 3

Lubrication

Machines of Class 300U have a semi-automatic lubricating system comprising of a hollow arm shaft and a hollow bed shaft which act as oil reservoirs. The oil is distributed to all of the principal bearings by centrifugal force through small jets in the shafts when the machine is in operation. Provision is also made for hand lubricating other movable parts which are not lubricated from the reservoirs.

Caution: User Singer Oil, "Type B" or "Type D". Use "Type D" oil when oil is desired which will produce minimum stain on fabrics even after long period of storage.

Do not use additives in sewing machine oil as they may cause a reduction in the normal flow of oil that can result in damage to the machine.

Before starting the machine, the machine must be oiled as instructed. Failure to do this will result in damage to the machine.

The Pressure Oil Can, furnished with the machine is to be used to oil all points requiring lubrication.

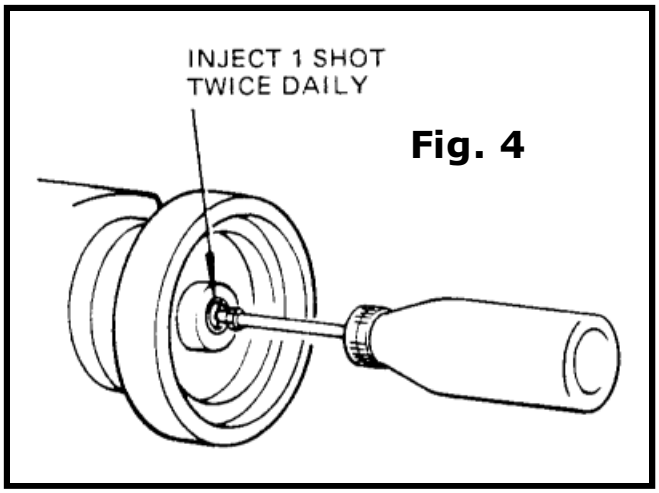

Fig. 4

To Oil the Arm Shaft

To fill the arm shaft reservoir, insert spout of the pressure oil can in hole, Fig. 4, and inject 1 shot of oil into shaft twice daily.

To Oil the Bed Shaft

To fill the bed shaft reservoir, push the spring cover, Fig. 5, to the left and insert spout of pressure oil can into the hole and inject 1 shot of oil into shaft twice daily. Close oil hole spring cover.

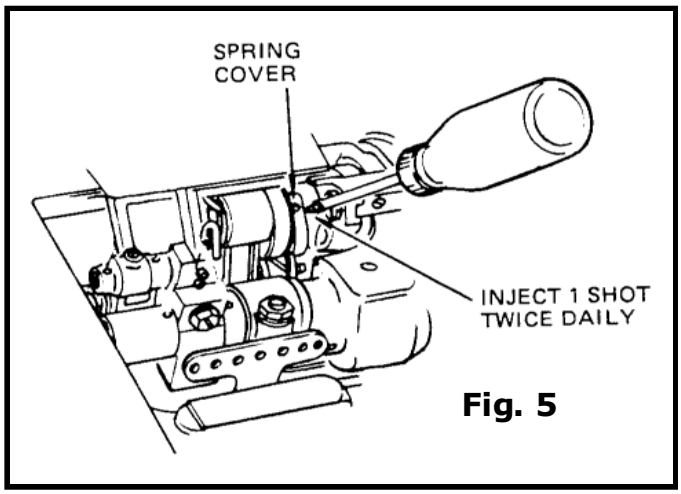

Fig. 5

Other Oiling Points

Applying oil to all work plate and arm oil holes, needle bar bearings and connections, needle bar rock frame bearings, looper rocker sleeve and presser lifting mechanism.

Caution: For machines in continuous use, all oiling points must be oiled daily. Occasionally oil tension release mechanism and looper pull-out rack.

Setting the Needle

Refer to Fig. 6.

Turn the machine pulley over toward the operator until the needle bar is at its highest point.

Loosen the needle set screw.

Insert the needle into the needle bar and clamp as far as it will go making certain that the scarf of the needle faces toward the left.

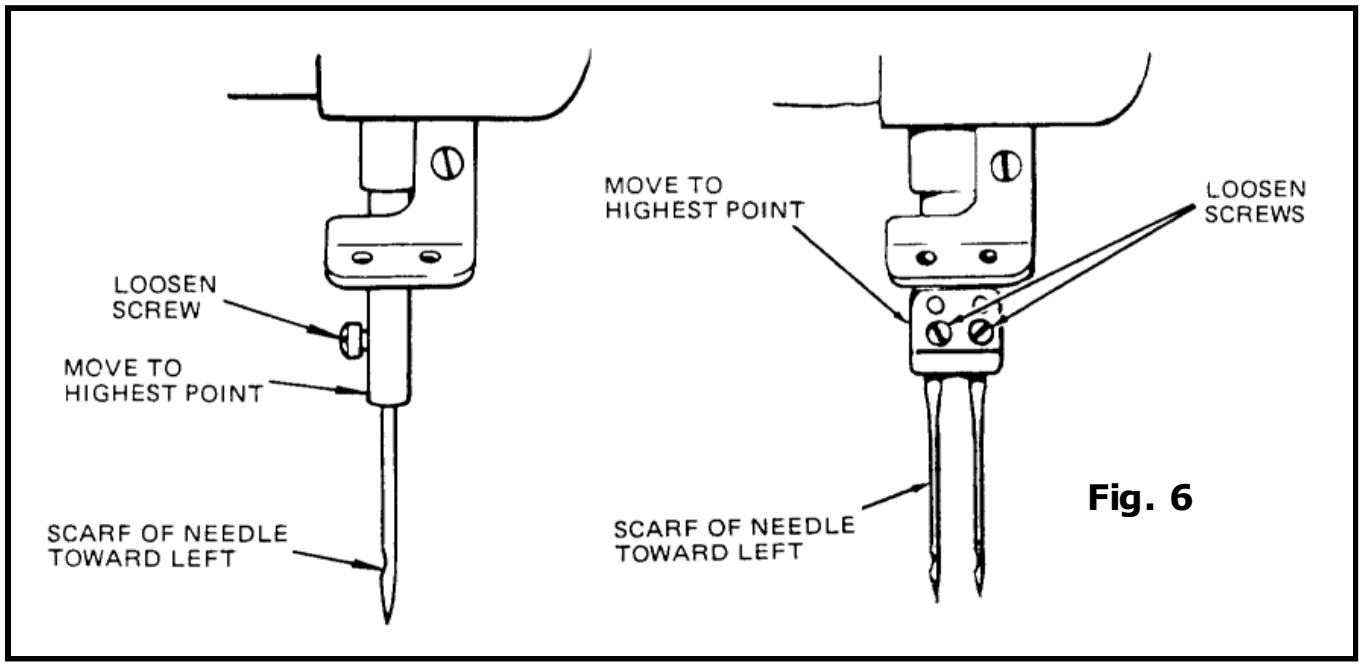

Fig. 6

Threading the Machine

Either left twist or right twist thread may be used in the needles and loopers. Rough or uneven thread or thread which passes through the needle eye with difficulty will interfere with successful operation of the machine.

Upper Threading

Turn the machine pulley over toward the operator until the needle bar is at its highest point. Pass the thread from the unwinder through the threading points indicated in Fig. 7. Draw approximately two inches of thread through the needle eye with which to start sewing. Make certain that each thread passes through the thread tension device.

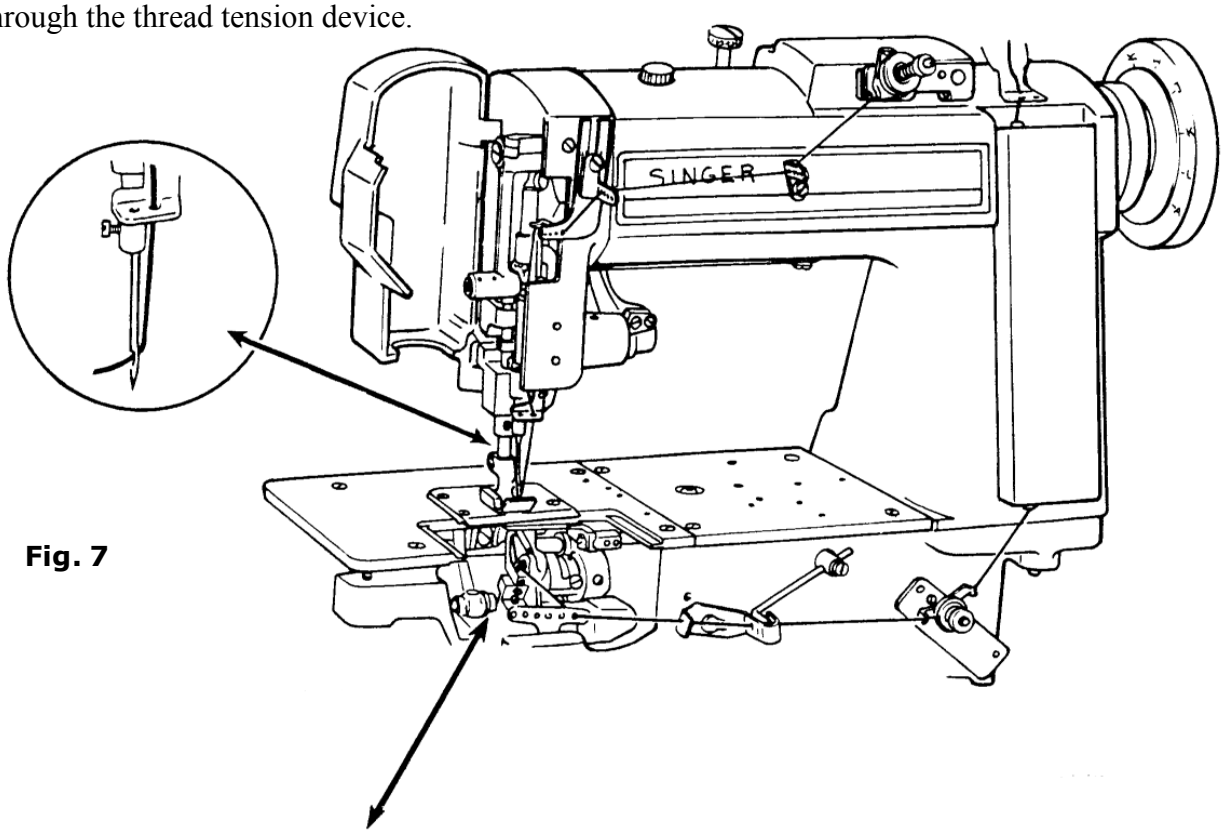

Fig. 7

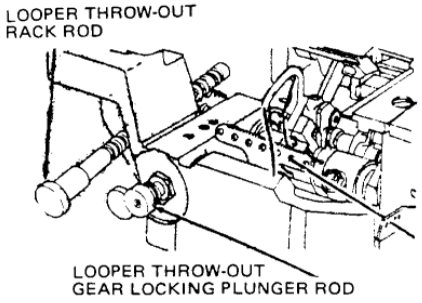

Lower Threading

Open the front table section, remove the bed slide and turn the machine pulley over toward the operator until the needle bar is at its highest point. Move the looper throw-out gear locking plunger rod and looper throw-out rack rod, Fig. 7, out as far as possible. This will place loopers in position for easier threading and prevent accidental operation of machine until loopers are returned to sewing position.

Threading the Loopers

Pass the thread from the unwinder through the threading points as indicated. Draw approximately two inches of thread through the looper eye with which to start sewing.

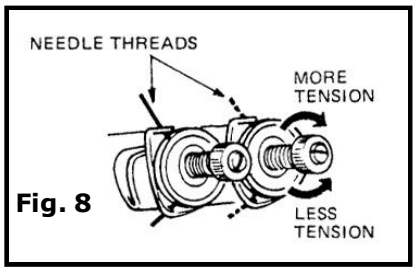

Fig. 8

Tension

Tension on the thread should be as light as possible while still sufficient to set the stitch correctly in material.

Needle Thread Tension

To regulate the needle thread tension, turn the thumb screw indicated in Fig. 8 as may be required.

Important: Regulate the needle thread tension only when the presser foot is down.

Looper Thread Tension

To regulate the looper thread tension, turn the thumb screws as indicated in Fig. 9 as may be required.

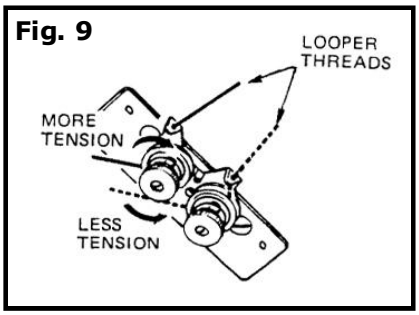

Fig. 9

Pressure

Pressure on material should be as light as possible while still sufficient to insure correct feeding.

Presser Foot Pressure

To regulate the presser foot pressure, loosen the lock screw, Fig. 10, at the rear of the machine. Tighten the thumb screw to increase pressure; loosen to decrease pressure. When the correct feeding pressure is attained, tighten the lock screw.

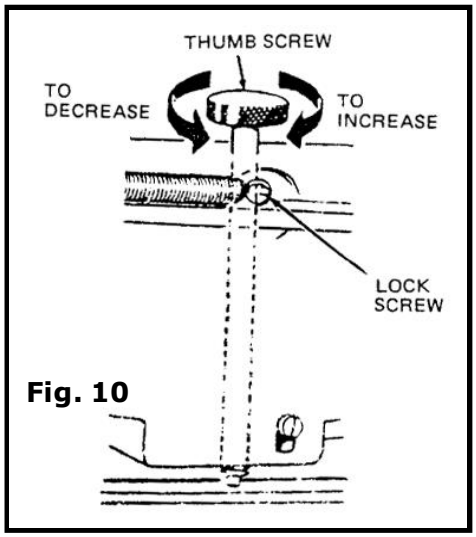

Fig. 10

Alternating Pressers

To increase pressure, loosen the lower lock nut and loosen the lock screw, then tighten the upper lock nut, see Fig. 11. When the correct pressure is attained, tighten the lock screw. Then tighten the lower lock nut. To decrease pressure, loosen the upper lock nut and loosen the lock screw, then tighten the lower lock nut. When correct pressure is attained, tighten the lock screw. Then tighten the upper lock nut.

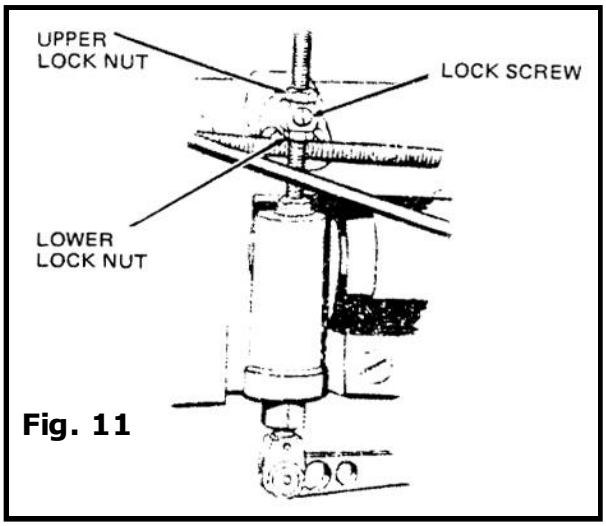

Fig. 11

Alternating Presser with Pneumatic Pressure Control

Adjust the height of the Pressure Cylinder with the presser feet resting on the throat plate. There should be a clearance of 1/4" between the Presser Bar Spring Fork and bottom of the cylinder. To raise the cylinder, loosen the lower lock nut and tighten upper lock nut, see Fig. 12. To lower the cylinder, loosen the upper lock nut and tighten the lower lock nut. When correct adjustment is attained, tighten both lock nuts.

Regulate air pressure: The correct air pressure is set for average feeding when the Presser Bar Spring Fork rises to approximately 1/16" from the bottom of the cylinder.

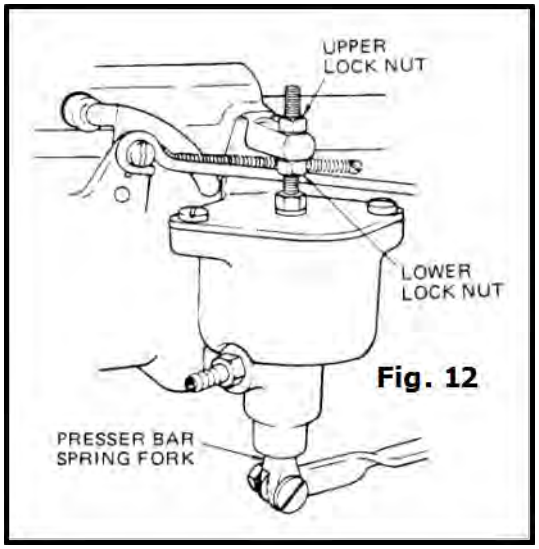

Fig. 12

Upper Feed Roll Pressure

To regulate the pressure of the upper feed roll, turn the thumb screw as shown in Fig. 13.

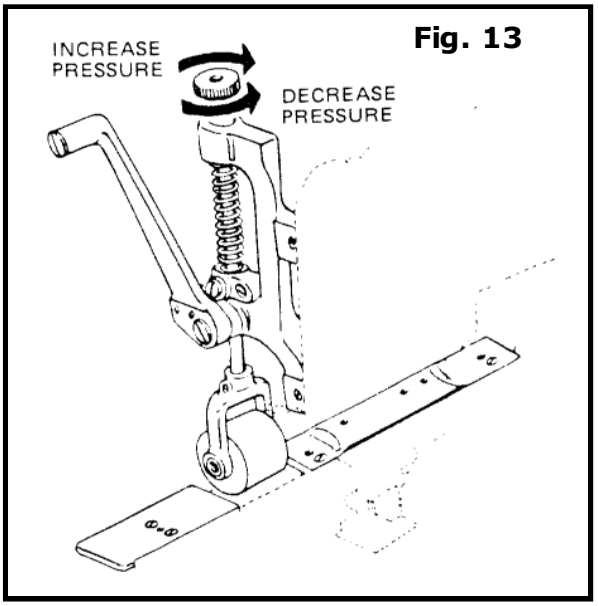

Fig. 13

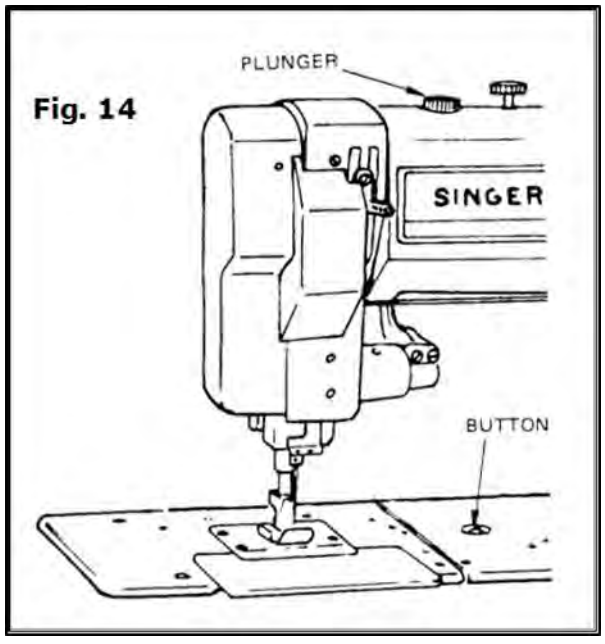

Fig. 14

Stitch Length

To adjust the stitch length, depress the plunger, Fig. 15, located on top of the arm. Continue to hold the plunger down and turn the machine pulley toward the operator until the plunger enters the notch in the arm shaft eccentric. Then turn the plunger to lock in position. Depress the button located on the machine bed. Hold down and turn the machine pulley toward the operator to increase length of the stitch, or away from the operator to decrease the length of the stitch. Letter "A" on the machine pulley indicates the lowest stitch. When desired length is indicated by a letter and is opposite of the arrow on the front of the machine, release button and turn the plunger to the right or left until it springs outward.

Caution: Never turn the machine pulley with the plunger in the locked position until the button on the machine bed is depressed.

Machine with Puller Feed

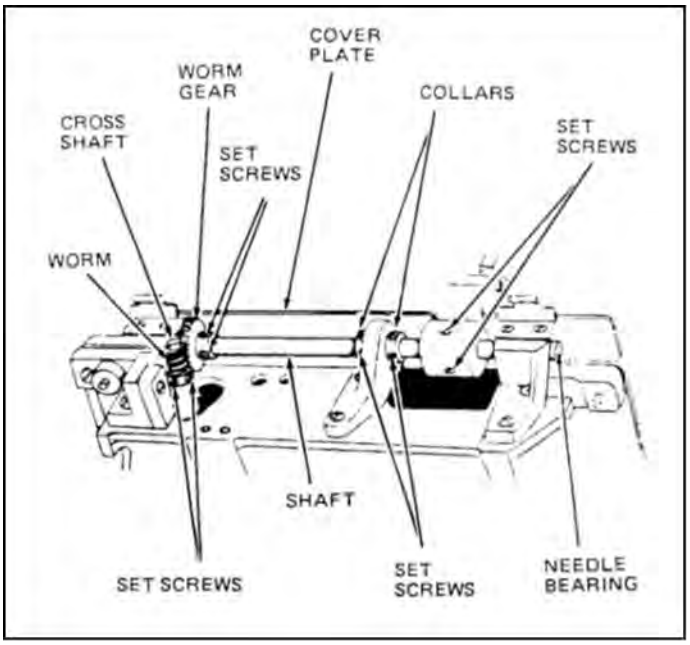

The length of the stitch is determined by the stitch gears in the puller feed mechanism. The compound feed stitch length should be set slightly shorter than the stitch length of the puller feed.

To change the Puller Feed gears for adjusting stitch length, remove the two cover plate screws and remove the cover plate, Fig. 15. Loosen the set screws. Slide the puller feed shaft to the right far enough to allow removal of the worm and worm gear. Place the new worm on the cross shaft. Turn the worm in the operating direction and tighten the first set screw into the flat of the shaft. Then securely tighten both set screws, checking for excessive end play. Engage the new worm gear with the worm and slide the puller feed shaft through the worm gear until the end of the shaft is flush with the needle bearing. Remove the end play in the shaft by setting the two collars against the bracket and tightening the four set screws. Align the lower feed roll with the upper feed roll and tighten the two set screws. Center the worm gear on the center of the worm. Tighten the two set screws with the first screw in the spline of the shaft. Replace the cover plate and adjust the compound feed.

Presser Bar Lift

When the presser foot is raised by the presser bar lifter and the needle is at its highest position, the point of the needle should not protrude below the presser foot.

To adjust, turn the machine pulley over toward the operator until the needle is at its highest position. Loosen the set screw, Fig. 16. Raise the presser foot to the correct height, place the stop collar against the upper bracket, and tighten the set screw.

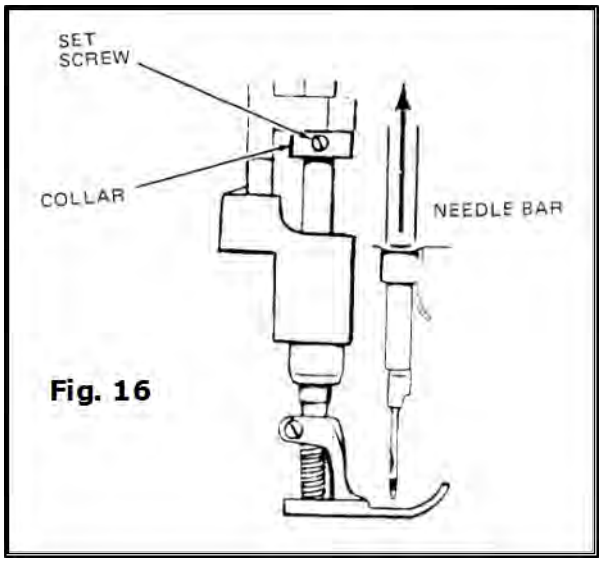

Fig. 16

Machines with Alternating Pressers

The lift of the vibrating and lifting pressers is controlled by an adjustable eccentric. To adjust, remove the arm cover at the rear of the machine. Turn the machine pulley over toward the operator until the feeding presser is down. Loosen the two lock screw, Fig. 17, and the two clamp screws. Insert a screw driver into the notch of the adjusting disc, and turn the machine pulley as indicated in Fig. 17. Then tighten the two clamp screws and the two lock screws.

When it is desirable to have either one of the pressers lift higher than the other, turn the machine pulley over toward the operator until the lifting presser is at its highest position. Loosen the tow clamp screws, Fig. 18, and turn the lifting rock shaft crank up or down until the desired lift of each presser is attained. Then tighten the tow clamp screws.

Caution: Limit lift of pressers to a minimum required for the work, as this permits higher speeds.

The vibrating presser should be timed so that under normal sewing conditions, the presser foot will seat on the material at approximately the same time the needle enters the material. This timing can be advanced or retarded slightly depending on the type of operation being performed, such as sewing over seams. To adjust, loosen the tow holding screws, Fig. 18, not more than one half turn. Then turn the adjustable eccentric, Fig. 17, until the vibrating presser seats at the correct time. Securely tighten the tow holding screws after the adjustment is made.

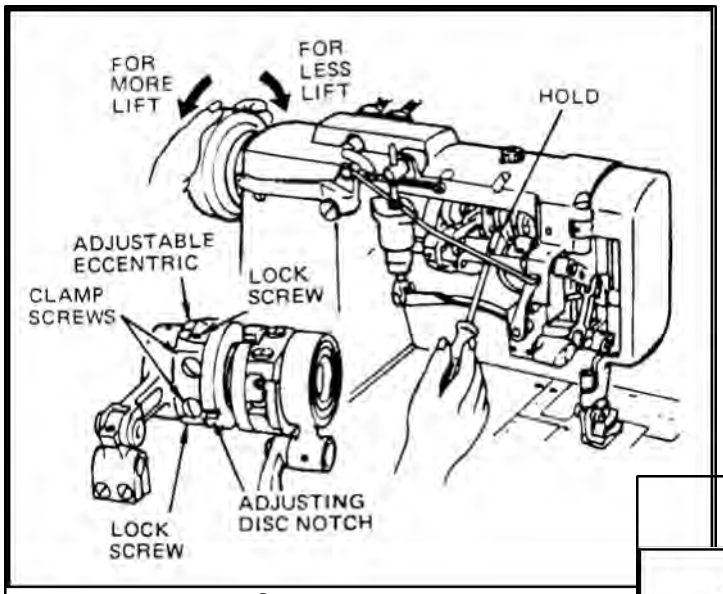

Fig. 17

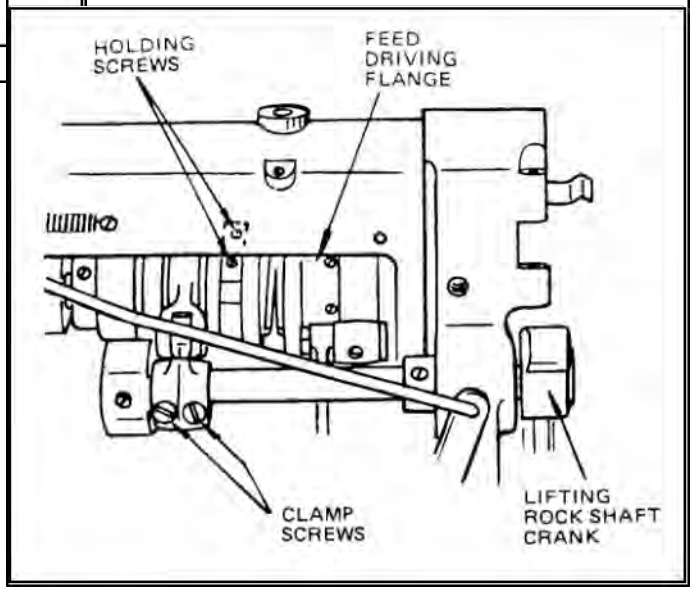

Fig. 18

Setting the Height of Feed Bar

When the feed bar is set at the correct height, the feed lift link clamp will be aligned with the rock shaft timing flat. To adjust, make certain that the feed lifting crank timing screw, Fig. 19, engages the shaft spot correctly. Loosen the clamp screw and move the feed lift clamp link to the correct position. Then tighten the clamp screw.

Fig. 19

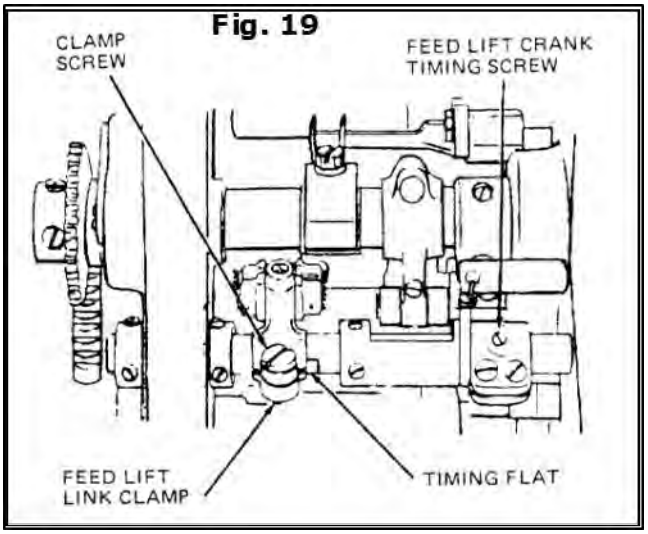

Centralizing the Feed Dog

Sidewise Setting

The needle should enter the needle hole of the feed dog with the same clearance between the needle and the left or right side of the hole. To adjust, loosen the feed dog screws, Fig. 20. Move the feed dog until the correct clearance is attained. Hold in position, and tighten the feed dog screws.

Additional adjustment, if necessary, may be attained by loosening the four shaft collar set screws, the two rock shaft crank clamp screws, Fig. 20, and the feed lifting clamp screw, Fig. 19. Move the complete assembly to required position and tighten screws.

Lengthwise Setting

The feed dog should clear the ends of the feed slots in the throat plate equally at both ends of the feed travel. To adjust, set the feed for the desired stitch length. Loosen the two rock shaft crank clamp screws, Fig. 20. Move the feed rocker forward or backward until the correct positioning is attained. Then tighten the two clamp screws.

Fig. 20

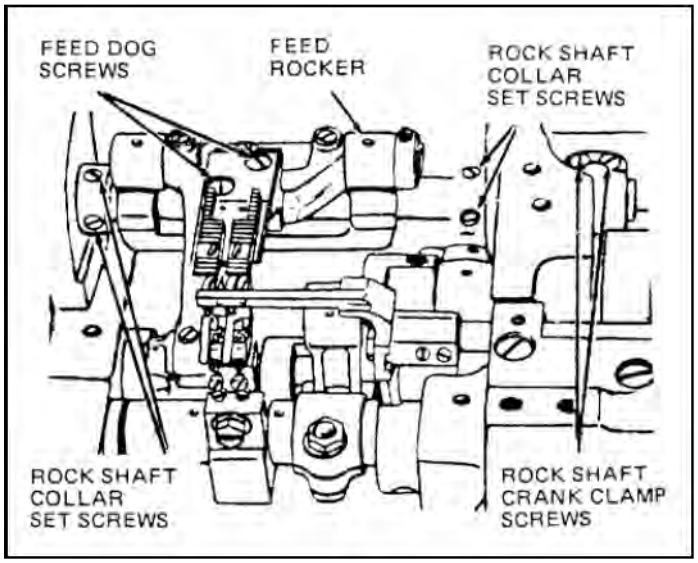

Setting the Height of the Feed Dog

When the feed dog height is set correctly, approximately the full depth of the teeth will show above the throat plate. To adjust, loosen the lock nuts, Fig. 21, and slightly loosen the feed dog clamping screw. To raise the feed dog turn the jack screw clockwise; to lower, turn the jack screw counter-clockwise and tap the feed dog down. When the correct setting is attained, tighten the clamping screws and lock the nuts.

Fig. 21

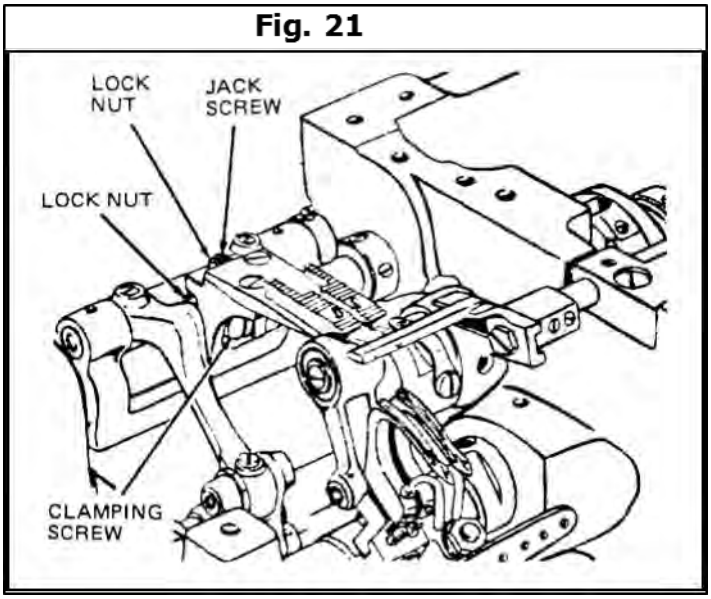

Timing the Feed Lift Eccentric

When the feed dog is at its highest position, the top of the teeth should be parallel with, and project full depth of the teeth above the upper surface of the throat plate. To adjust, insert screwdriver in the hole in the feed strap and loosen the two set screws, Fig. 22. Move the feed lift eccentric forward for earlier rise of the feed dog, or backwards for later rise. Then tighten the two set screws.

Fig. 22

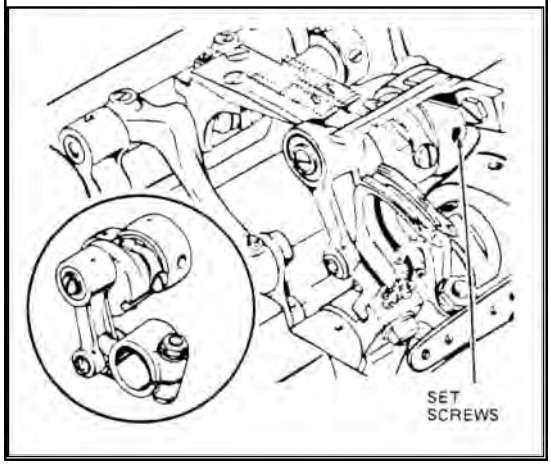

Needle Bar Positioning

The needles should enter the needle holes of the feed dog toward the front with approximately the same clearance between the front of the needles and the needle holes as at the side. To adjust, press the needle bar rock frame, Fig. 23, against the drive arm clamp screws. Continue holding the rock frame against the drive arm, move the needle bar to correct the position and tighten the two clamp screws.

Fig. 23

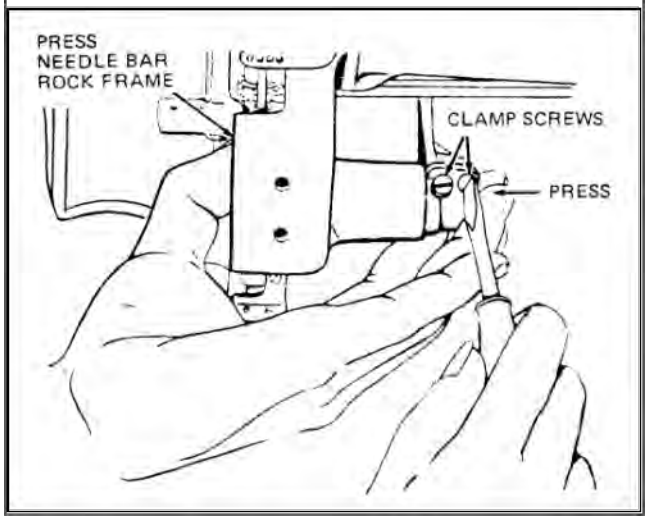

Positioning the Loop Deflectors

When the loop deflector, located on the underside of the feed dog, is positioned correctly, there should be a clearance of approximately 1/32" between the right side of the needle and loop deflector. To adjust, move the looper out of sewing position and tilt the machine back on its hinges. Loosen the loop deflector screws, Fig. 24. Move the deflectors toward the rear of the feed dog as far as the screw slots allow. Tighten slightly to allow for further adjustment. Return the looper to the sewing position and turn the machine pulley until the needle bar has descended to the bottom of the needle bar stroke. Tap the deflector to the left or right until the correct clearance is attained. Move the looper out of the sewing position and tighten the loop deflector screws.

Fig. 24

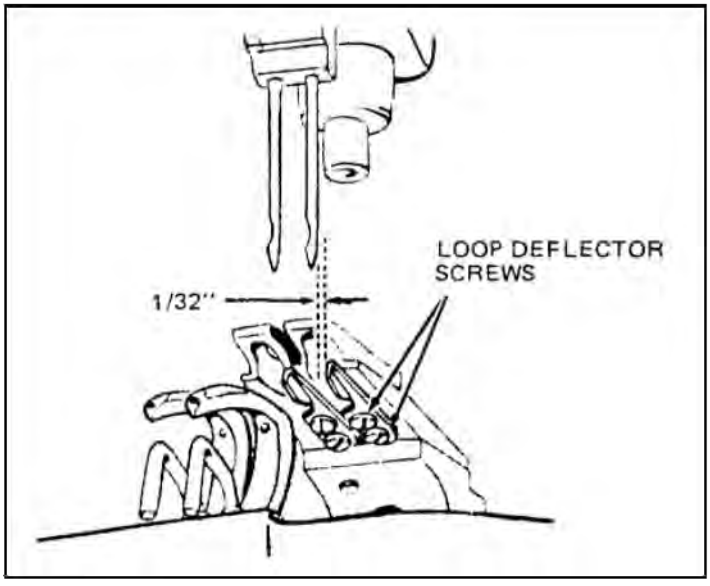

Setting the Distance from the Looper to the Needle

Fig. 25

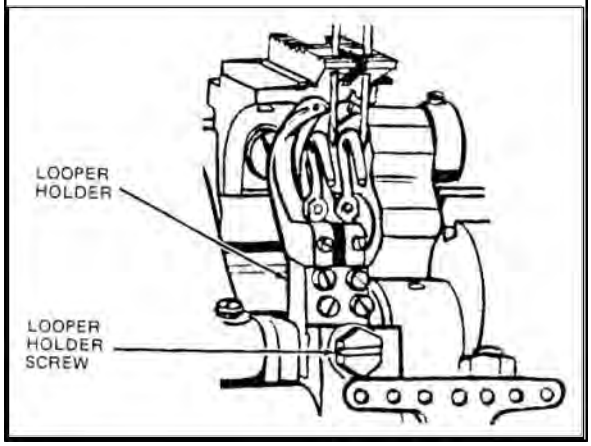

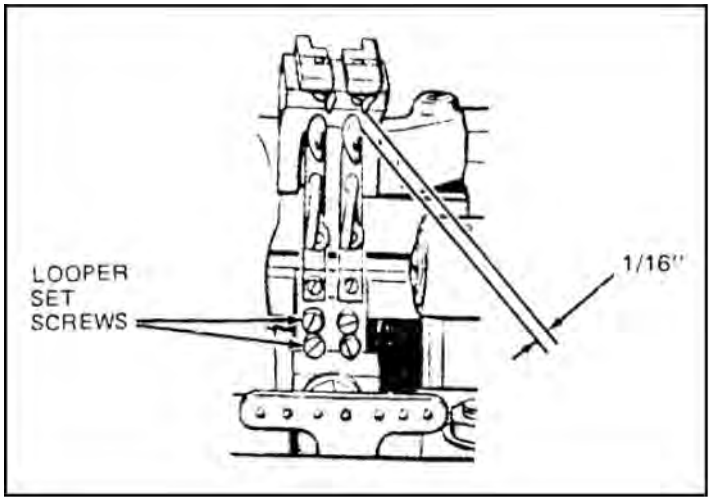

Sidewise Setting

When the looper is correctly positioned, the point of the looper just clears the scarf of the needle on the forward stroke of the looper. To adjust, turn the machine pulley until the looper point is directly opposite of the center of the needle. Loosen the looper holder screw, Fig. 25, and tap the holder to the left or right until the correct clearance is attained. Then securely tighten the looper holder screw.

Move the looper to the extreme forward position. Check the clearance between the heel of the looper and the loop deflector, Fig. 26, which should be approximately 1/16". To adjust, loosen the two looper set screws. Turn the looper to the left or right until the correct clearance is attained. Hold in position and securely tighten the two set screws.

Caution: On single and multi-needle machines, make certain that the point of each looper just clears the scarf of its respective needle. To adjust, with the looper point directly opposite the center of the needle, loosen the two set screw, Fig. 26, and turn the looper slightly to the left or right. Then tighten the set screws.

Lengthwise Setting & Setting the Height of the Needle Bar

Fig. 27

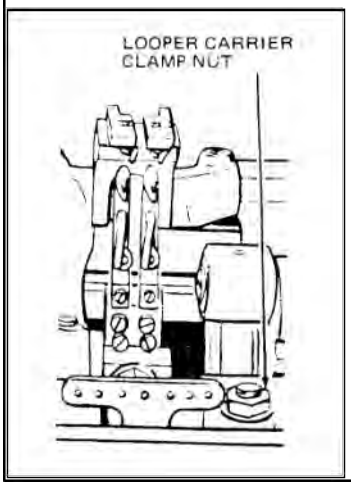

Fig. 28

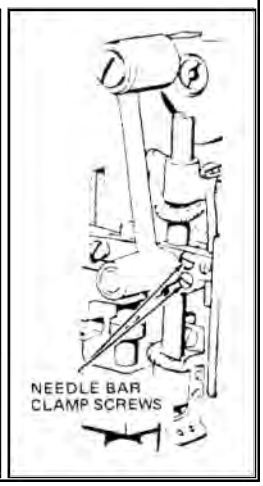

When correctly set: the point of the looper should be directly opposite of the center of the needle, and at the center of the clearance above the eye of the needle when the looper timing mark LT on the machine pulley is opposite of the timing arrow on the arm.

To adjust the looper, loosen the looper carrier clamping nut, Fig. 27. Move the carrier forward or backward until the looper point is directly opposite of the center of the needle. Then tighten the clamping nut.

To adjust the needle bar, first make certain that the needle is inserted up into the needle bar or clamp as far as possible. Loosen the two needles bar clamping screws, Fig. 28, and raise or lower the needle bar to correct position. Then tighten the clamping screws

Timing Looper Driving Crank

When the looper driving crank is properly timed, the point of the looper will pass above the eye of the needle at the same distance on both the forward and backward strokes of the looper.

To adjust when the point of the looper passes higher on the forward stroke, loosen the looper driving crank set screw, Fig. 29. Loosen the looper crank timing screw (left) approximately 1/8 turn, and tighten the looper crank timing screw (right). Continue to adjust until the correct adjustment is made. Then securely tighten the set screw.

When the point of the looper passes higher on the backward stroke, reverse the adjustment by loosening the timing screw (right) and tightening the timing screw (left).

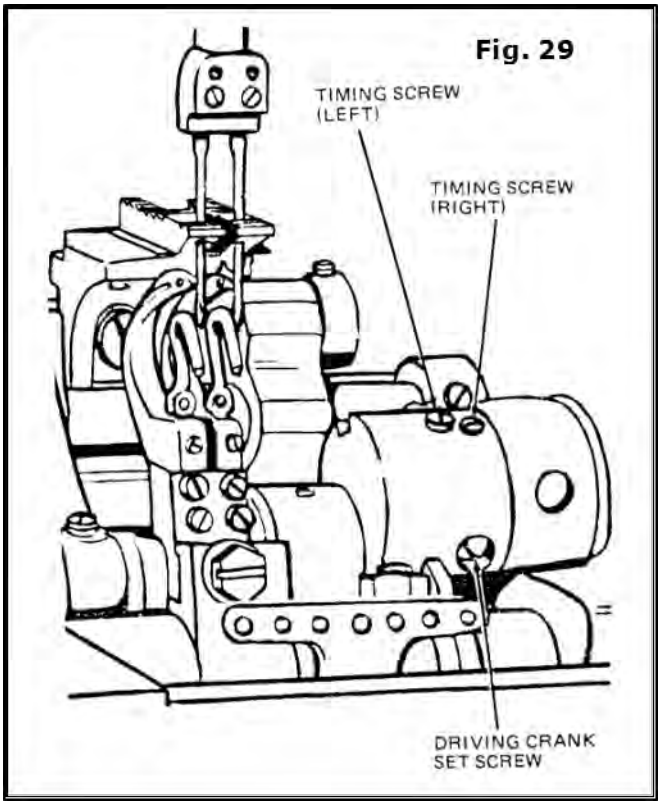

Fig. 29

Setting the Needle Guards

When the needle guards are properly set, they should pass as close as possible to the needles without touching. To adjust the guard turn the machine pulley over toward the operator until the points of the loopers are about to pass the needles on their forward strokes. At this point, the looper timing mark LT on the machine pulley should be approximately 1/8" above the arrow on the machine arm. Loosen the needle guard set screws, Fig. 30. Turn the needle guards as close to the needles as possible without touching. Tighten the set screws. Check by springing the needles to the left and turning the machine pulley to make certain that the looper points do not stroke the needles.

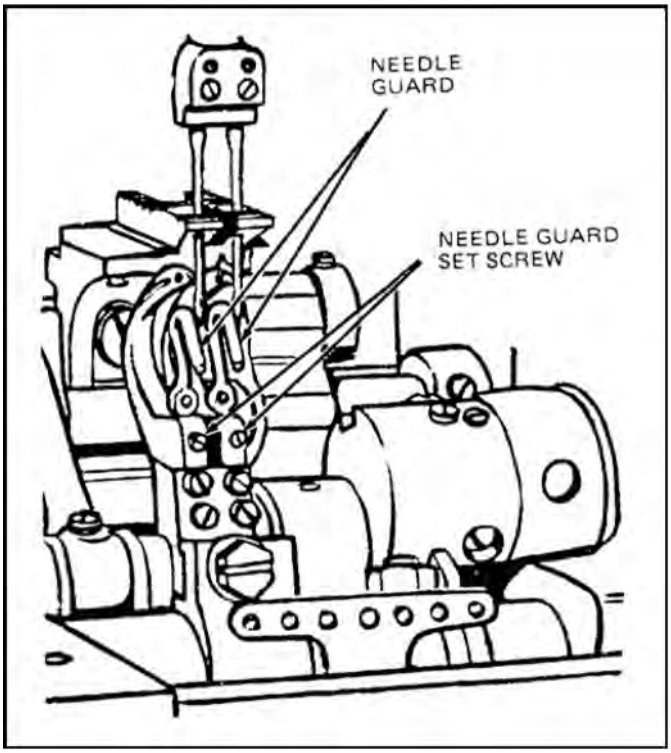

Fig. 30

Positioning Spreader

Fig 31

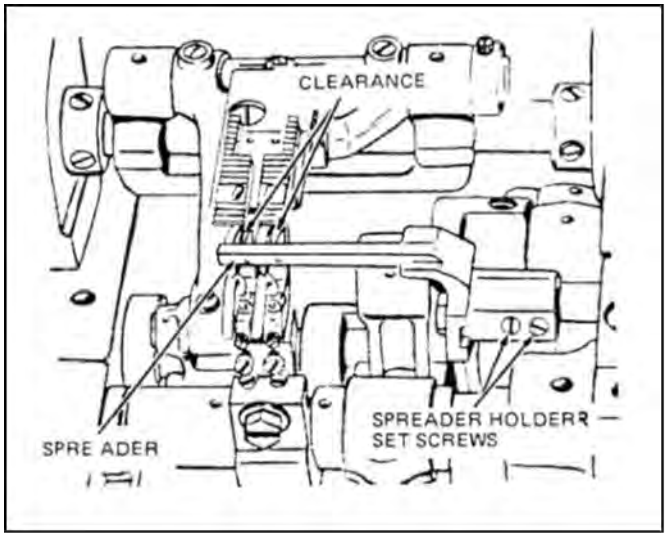

Fig 32

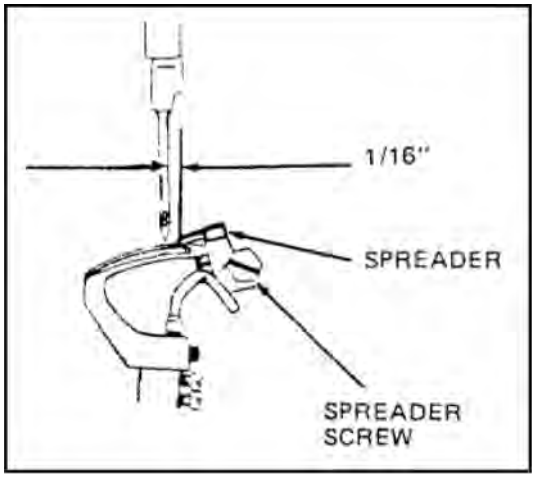

Sidewise and Height Setting

When the looper on its forward stroke is passing the spreader

a) The point of the spreader should be exactly opposite the top of the thread groove at the left side of the looper.

b) The clearance between the spreader point and the looper should be approximately the double thickness of ordinary paper.

To adjust, loosen the two spreader holder set screw, Fig. 31. Move the spreader and holder to the correct position. Hold in position and tighten the set screws.

Lengthwise Setting

When the point of the needle on its downward stroke is even with the point of the spreader, the clearance between the two points should be approximately 1/16". To adjust, loosen the spreader screw, Fig. 32, and move the spreader forward or backward to correct position. Then tighten the spreader screw.

Fig 33

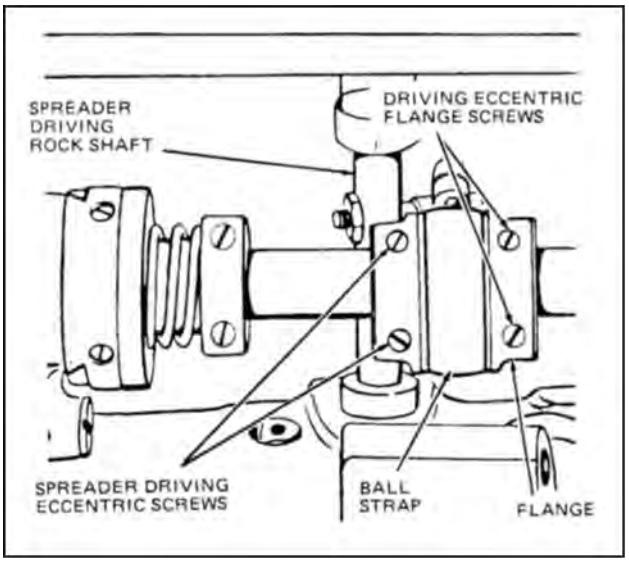

Changing Movement of Spreader

The sidewise movement of the spreader may be adjusted for sewing under abnormal conditions. Under normal conditions, maximum spreader movement is generally used. To adjust, tilt the machine back on its hinges, loosen the two spreader driving eccentric screws, Fig. 33, and the two spreader driving eccentric flange screws. Move eccentric to the left to increase movement, or to the right to decrease movement. When correctly positioned, tighten the two spreader driving eccentric screws first, hold flange against strap and tighten flange screws. Then refer to preceding information regarding positioning of spreader.

Adjusting Needle Thread Take-Up

Fig 34

The needle thread take-up and thread guide may be adjusted to increase or decrease the amount of thread drawn at the top of the needle bar stroke. To increase the amount, loosen the thread take-up screw, Fig. 34, and raise the take-up or loosen the guide screw and lower the guide. To decrease the amount, reverse the adjustment by lowering the take-up or raising the guide.

For average sewing conditions, the guide should be set with upper end 5/8" above the guide screw. The thread take-up should be set with the lower end 1.378" below the bottom of its holder.

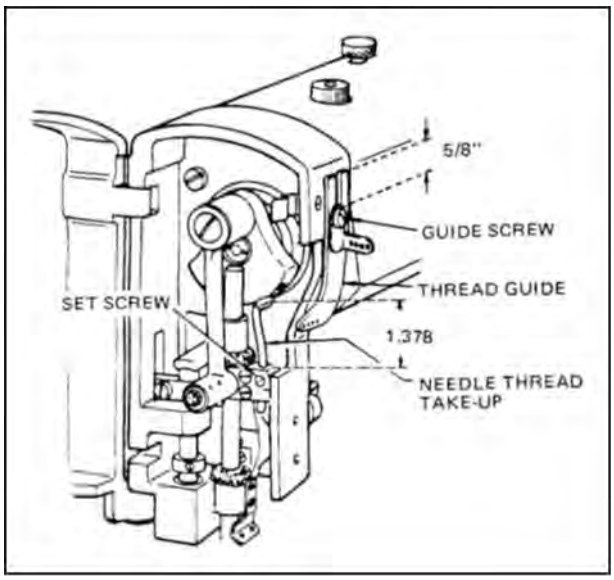

Adjusting Needle Thread Tension Releaser

When correctly adjusted, the tension releaser should release tension on the needle thread when the presser foot is raised and allows full adjusted tension when presser foot is down. To adjust, loosen the set screw, Fig. 35, and move tension releaser cap out for earlier release of tension or in for later release. Hold in position and tighten the set screw. Should the tension releaser not release tension at the correct time after making the above adjustments, loosen the tension releaser plate screw and move plate sidewise to correct position. Then tighten the screw.

Fig 35

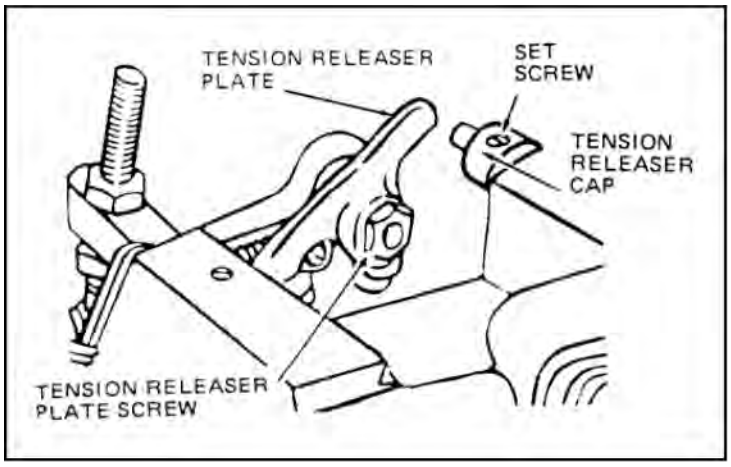

Adjusting Looper Thread Take-Up

The looper thread take-up and guide may be adjusted for handling more or less thread, according to the thickness of material and length of stitch, and to change the ratio of looper thread in the finished stitch.

To change the amount of thread handled, loosen the looper thread guide screw, Fig. 36, and looper thread take-up rod screw. Move the thread guide and take-up rod to the left for more thread or to the right for less thread. Tighten the two screws making certain that the take-up rod passes through the center of the guide yoke. To change the ratio of looper thread in finished stitch, loosen the thread guide screw, Fig. 36, and lower the yoke or right end of the thread guide for more thread. For less thread, raise the end of the guide. Hold in position and tighten the guide screw.

Fig 36

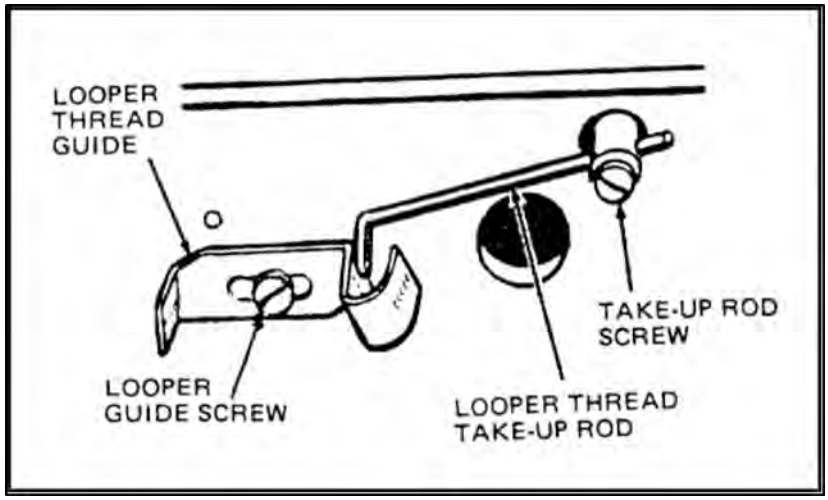

Singer® 300UX6 Assembly Drawings & Parts Lists

Atlanta Attachment Company is the exclusive
stocking distributor for Singer Tape Edge Sewing Heads
and recommended spare parts for Singer Tape Edge machines.

We can also supply proprietary parts in most cases for
Cash*, Spuhl*, Porter, United* Tape Edge workstations.

Orders may be placed by:
Phone: 770-963-7369
Fax: 770-963-7641
Email: sales@atlatt.com

® A registered trademark of The Singer Company Limited
Copyright © 2000 The Singer Company Limited
All rights reserved throught the world.

*Cash, Spuhl, Porter, and United are the trademarks of their respective companies.

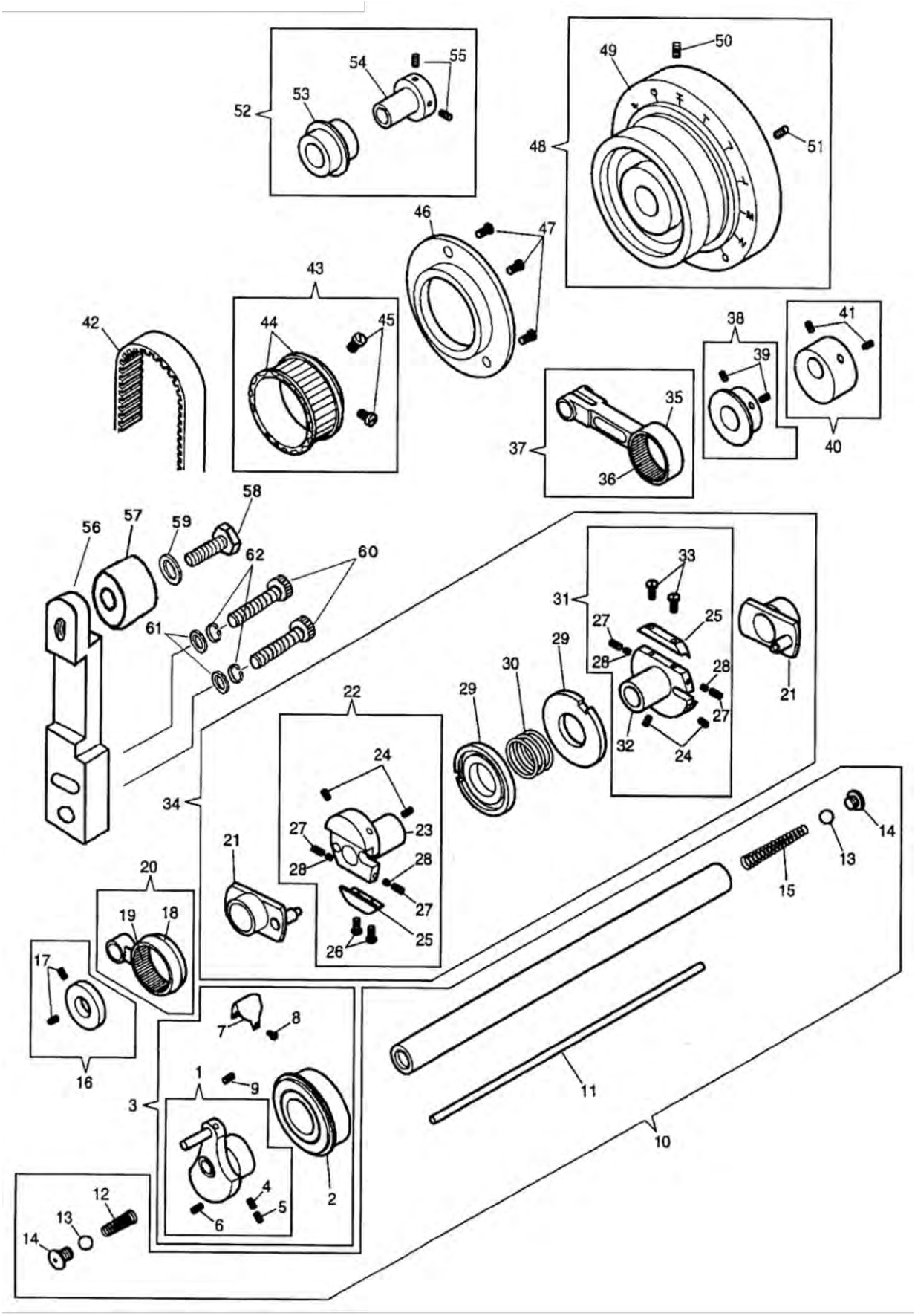
1
2
3
4
5
6
7
8
9
10
11
12
13
14
15
16
17
18
19
20
21
22
23
24
25
26
27
28
29
30
31
32
33
34
35
36
37
38
39
40
41
42
43
44
45
46
47
48
49
50
51
52
53
54
55
56
57
58
59
60
61
62

Upper Shaft Assembly

NO.	PART #	DESCRIPTION	NO.	PART #	DESCRIPTION
1	415138	CRANK, NEEDLE BAR	32	415077	LIFTING ECC FLANGE
2	32848	BEARING	33	374098	SCREW
3	2812239	NEEDLE BAR CRANK COMPLETE	34	415081	ECCENTRIC COMP
4	549024	SCREW	35	268491	LIFTING ECCENTRIC
5	544358	SET SCREW	36	271055	FEED DRIVING CONNECTION NEEDLE
6	500272	NEEDLE BAR CRANK SCREW	37	268491	LIFTING ECC CONN
7	281206	CRANK COVER	38	415086	SPACE COLLAR
8	545205451	SCREW, WHITE	39	414529	SCREW
9	281258	NEEDLE BAR CRANK OIL PACKING (	40	281256	BALANCE WEIGHT CPL
10	415128	ARM SHAFT	41	544208005	SCREW
11	268264	ROD, OIL CONTROL	42	268270	CONNECTION BELT
12	415200	SPRING	43	281290	PULLEY
13	268214	BALL, OIL STOP	44	202253	SPRING FLANGE
14	414578	BALL SCREW	45	414546	SCREW
15	268044	SPRING, OIL STOP BALL	46	268004451	HOUSING
16	415308	SPACING COLLAR	47	544336	STUD SCREW
17	414529	SCREW	48	281296467	MACHINE PULLEY (W/414525 & 414
18	271055	FD DRIVE CONN	49	281297467	MACHINE PULLEY
19	271055	FEED DRIVING CONNECTION NEEDLE	50	414525	SCREW
20	267609	FEED DRIVING CONN	51	414526	SCREW
21	267610	FEED DRIVE ECC	52	281294	ARM SHAFT THRUST COLLAR
22	415078	ECCEN FLANGE CPL	53	272142	BALL BEARING
23	415078	ECCENTRIC FRANGE	54	281295001	BED SHAFT THRUST COLLAR
24	414555	SCREW	55	544209005	SET SCREW
25	267623	FRICTION PLATE	56	KE0022	BELT TENSION BRACKET
26	374098	SCREW	57	KE0023	CAM FOLLOWER
27	414557	SCREW	58	KE0074	CAM FOLLOWE SCREW
28	241763	PACKING FIBRE	59	KE0082	CAM FOLLOWER SCREW WASHER
29	268065	ECC ADJUSTING DISC	60	414753004	BELT TENSION BRACKET SET SCREW
30	267618	ADJUSTING DISC SPR	61	270 543803005	WASHER
31	415076	LIFT ECC FLANGE CPL	62	270 543805005	WASHER

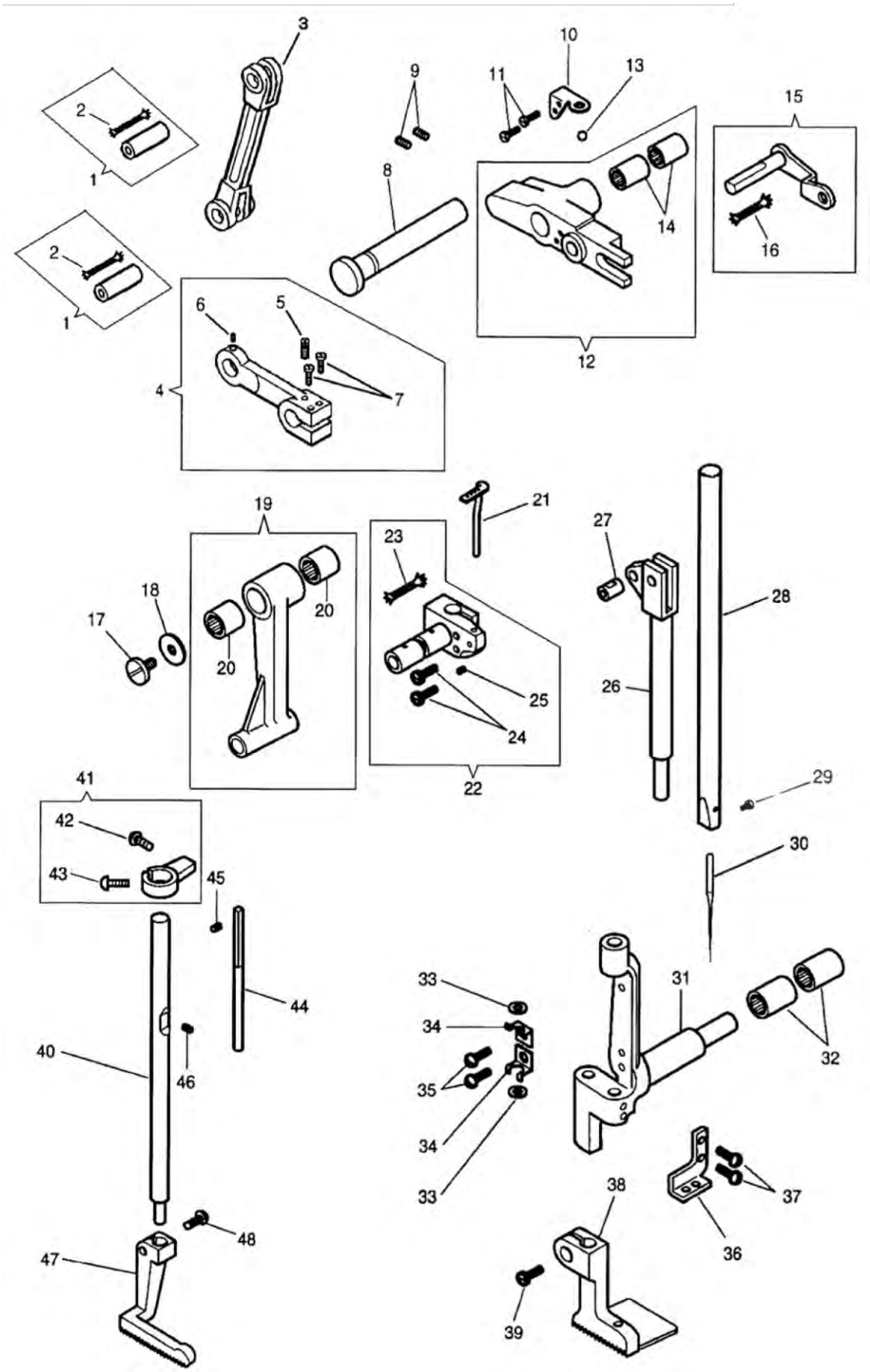
1
2
3
4
5
6
7
8
9
10
11
12
13
14
15
16
17
18
19
20
21
22
23
24
25
26
27
28
29
30
31
32
33
34
35
36
37
38
39
40
41
42
43
44
45
46
47
48

Front Assembly Sewing Arm

NO.	PART #	DESCRIPTION	NO.	PART #	DESCRIPTION
1	267617	LINK HINGE PIN	25	414545	SET SCREW
2	268258	PACKING WICK	26	267657	VIB PRESSER BAR
3	267627	LIFTING LINK	27	267658	VIBRATING PRESSER BAR HINGE ST
4	415061	LIFTING CRANK	28	281912	NEEDLE BAR
5	141338	SCREW	29	414519	SCREW
6	141424	SCREW	30		SINGER NEEDLE 62x59 size 23
7	414511	SCREW	31	415045	FRAME, NEEDLE BAR
8	267626	HINGE STUD	32	268029	NEEDLE BEARING
9	544322	SET SCREW	33	268144	N BAR OILING FELT
10	267718	PRESSER BAR SPRING ARM BALL RE	34	268278	OILING FELT HOLDER
11	414548	RETAINER SCREW	35	414522	SCREW
12	415067	Lifting lever	36	268219	THREAD GUIDE
13	276025	BALL, PRESSER BAR SPRING ARM	37	414539	SCREW
14	KE0008	LIFTING LEVER BUSHING	38	KE0069	VIBRATING PRESSER FOOT
15	267631	PR BAR LIFT CRANK	39	414638	SCREW
16	268258	PACKING WICK	40	267628	LIFTING PR BAR
17	414517	SCREW	41	415059	GUIDE BLOCK
18	268139	WASHER	42	414516	SCREW
19	281916	NEEDLE BAR CONNECTING LINK (30	43	414512	SCREW
20	270266	NEEDLE BEARING (GBH68)	44	267907	GUIDE ROD
21	268512	THREAD GUIDE	45	544301	SCREW
22	281914	NEEDLE BAR CONNECTING STUD CPL	46	414530	SCREW
23	202330	OIL WICK	47	559059	LIFTING PRESSER FOOT
24	414511	SCREW	48	414638	SCREW

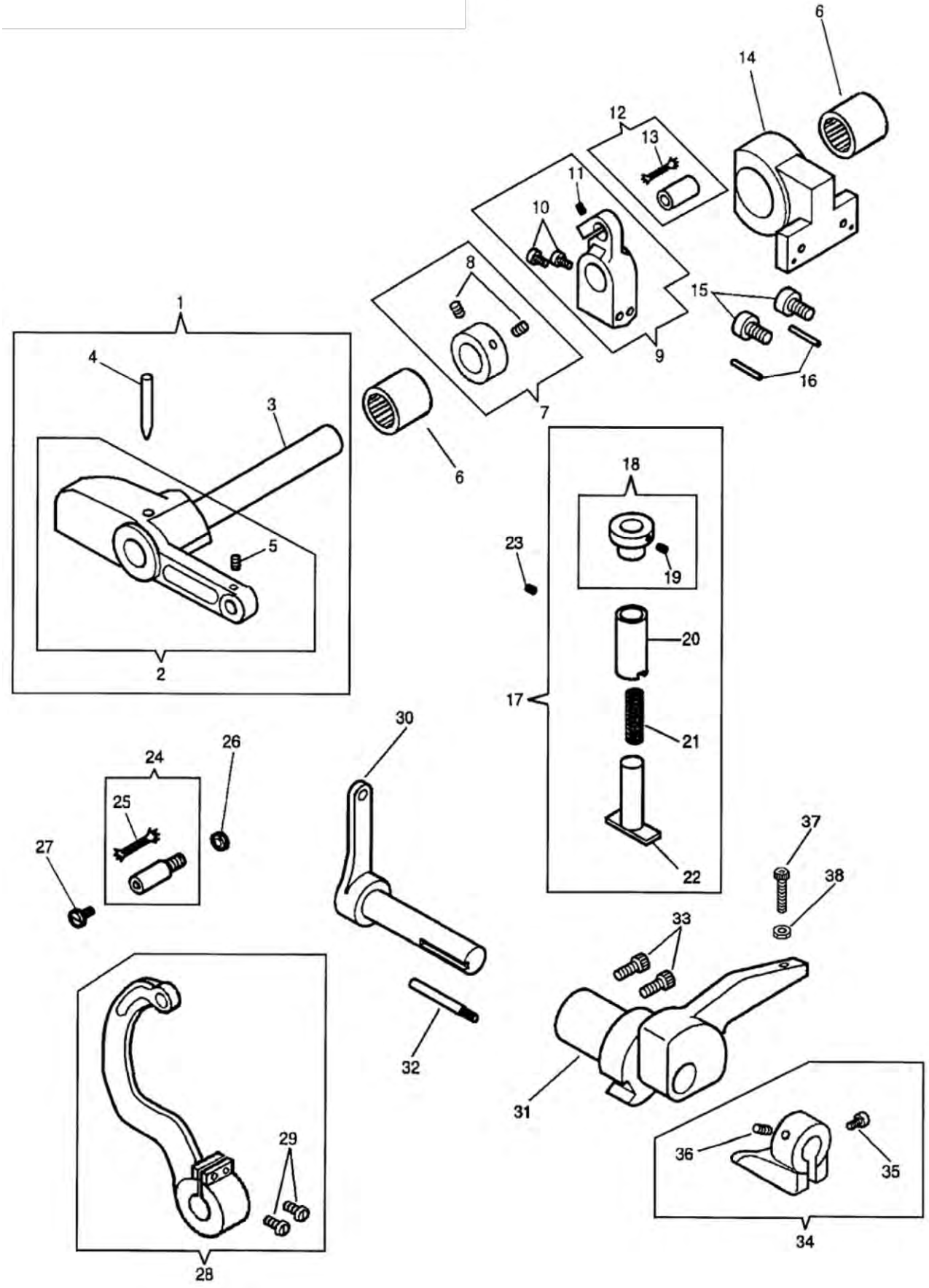
1
2
3
4
5
6
7
8
9
10
11
12
13
14
15
16
17
18
19
20
21
22
23
24
25
26
27
28
29
30
31
32
33
34
35
36
37
38

External Parts Sewing Arm #1

NO.	PART #	DESCRIPTION
1	32788	ROCK SHAFT
2	32788	ROCK SHAFT
3	32789	ROCK SHAFT
4	548035	PIN
5	141424	SCREW
6	267110	NEEDLE BEARING,GBH-78
7	415065	COLLAR COMP
8	504020	SCREW (300UX5)
9	415069	CONN CRANK
10	414509	SCREW
11	374362	SUBSTITUTION REQUIRED
12	267617	LINK HINGE PIN
13	268258	PACKING WICK
14	415071451	LIFTING ROCK SHAFT BRACKET
15	414504	SCREW
16	543841001	PIN
17	415098	STUD COMP
18	415099	STUD CAP
19	414528	SCREW
20	268149	ROCK SHAFT SLEEVE (300UX5)
21	214529	SPRING
22	268148	STUD
23	414527	SCREW
24	415091	HINGE STUD
25	268258	PACKING WICK
26	541197	NUT
27	545297	SCREW
28	415094451	NEEDLE BAR ROCK FRAM DRIVING ARM
29	414790	SCREW
30	267612	CRANK, FOOT LIFT
31	267719452	ARM FULCRUM (WHITE)(HIGH LIFT)
32	414566	SCREW STUD
33	350604	SCREW
34	415122	FT L ARM COMP
35	414509	SCREW
36	545213	SET SCREW
37	414750004	PRESSER BAR SPRING ARM FULCRUM
38	541166001	NUT

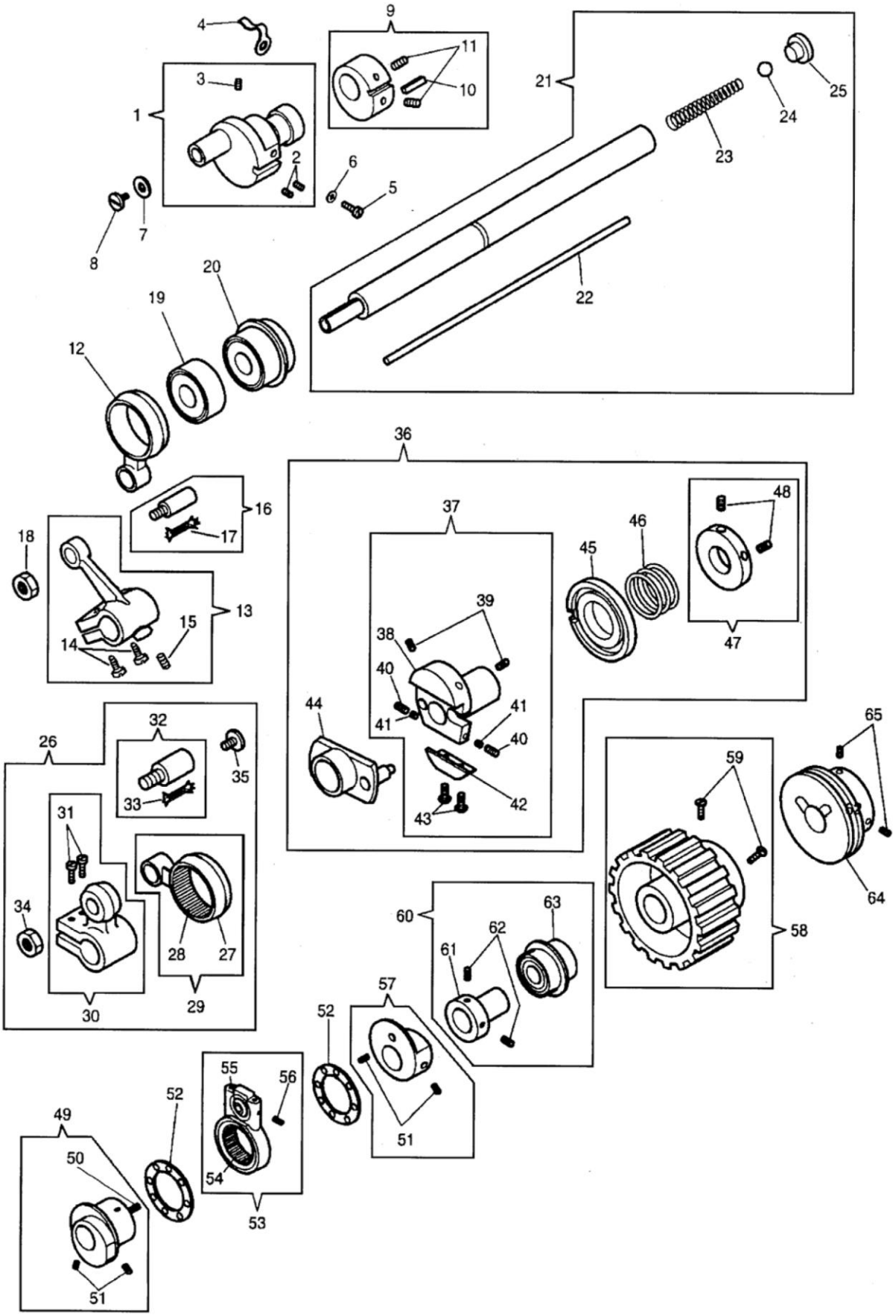
1
2
3
4
5
6
7
8
9
10
11
12
13
14
15
16
17
18
19
20
21
22
23
24
25
26
27
28
29
30
31
32
33
34
35
36
37
38
39
40
41
42
43
44
45
46
47
48
49
50
51
52
53
54
55
56
57
58
59
60
61
62
63
64
65

Lower Shaft Assembly

NO.	PART #	DESCRIPTION	NO.	PART #	DESCRIPTION
1	415176	DRIVE CRANK	34	541197	NUT
2	374099	SCREW	35	545297	SCREW
3	500264833	LOOPER DRIVING CRANK SET SCREW	36	415082	ECCENTRIC COMP
4	268102	COVER, OIL HOLE	37	415073	FEED DRIVING ECC FLANGE
5	414563	SCREW	38	415073	SUBSTITUTION REQUIRED
6	204925	SPRING STUD WASHER(5)	39	414555	SCREW
7	268139	WASHER	40	414557	SCREW
8	200100	SCREW	41	241763	PACKING FIBRE
9	415210	FEED LIFT ECCEN	42	267623	FRICTION PLATE
10	268077	LUBRICATING PAD	43	374098	SCREW
11	544208005	SCREW	44	267610	FEED DRIVE ECC
12	268074	FD LIFT CONNECTION	45	268065	ECC ADJUSTING DISC
13	415206	ROCK SHAFT CRANK	46	268066	ADJUSTING DISC SPR
14	414511	SCREW	47	412011	SPRING COLLAR
15	414549	SCREW	48	544325	SET SCREW
16	415091	HINGE STUD	49	415187	SPREADER DRIVING ECCENTRIC
17	268258	PACKING WICK	50	543808002	PIN
18	541197	NUT	51	414528	SCREW
19	281216	BED SHAFT BALL BEARING	52	268220	THRUST WASHER
20	281224	BED SHAFT BALL BEARING	53	281246001	SPREADER DRIVING ECC CPL
21	559038	BED SHAFT CPL	54	415368	NEEDLE BEARING (300UX5)
22	268265	CONTROL ROD	55	281248	SPRD DR RCK SHFT SCR STD BALL
23	268044	SPRING, OIL STOP BALL	56	544203001	SCREW
24	268214	BALL, OIL STOP	57	415190	COUNTER BALANCE (300UX5)
25	414578	BALL SCREW	58	281292	BED SHAFT CONNECTION BELT PULL
26	415215	DRIVE SHAFT COMP	59	414546	SCREW
27	271055	FD DRIVE CONN	60	281294	ARM SHAFT THRUST COLLAR
28	271055	FEED DRIVING CONNECTION NEEDLE	61	281295001	BED SHAFT THRUST COLLAR
29	267609	FEED DRIVING CONN	62	544209005	SET SCREW
30	415213	SHAFT CRANK	63	272142	BALL BEARING
31	414511	SCREW	64	KE0038	BED SHAFT PULLEY
32	415091	HINGE STUD	65	544209005	SET SCREW
33	268258	PACKING WICK			

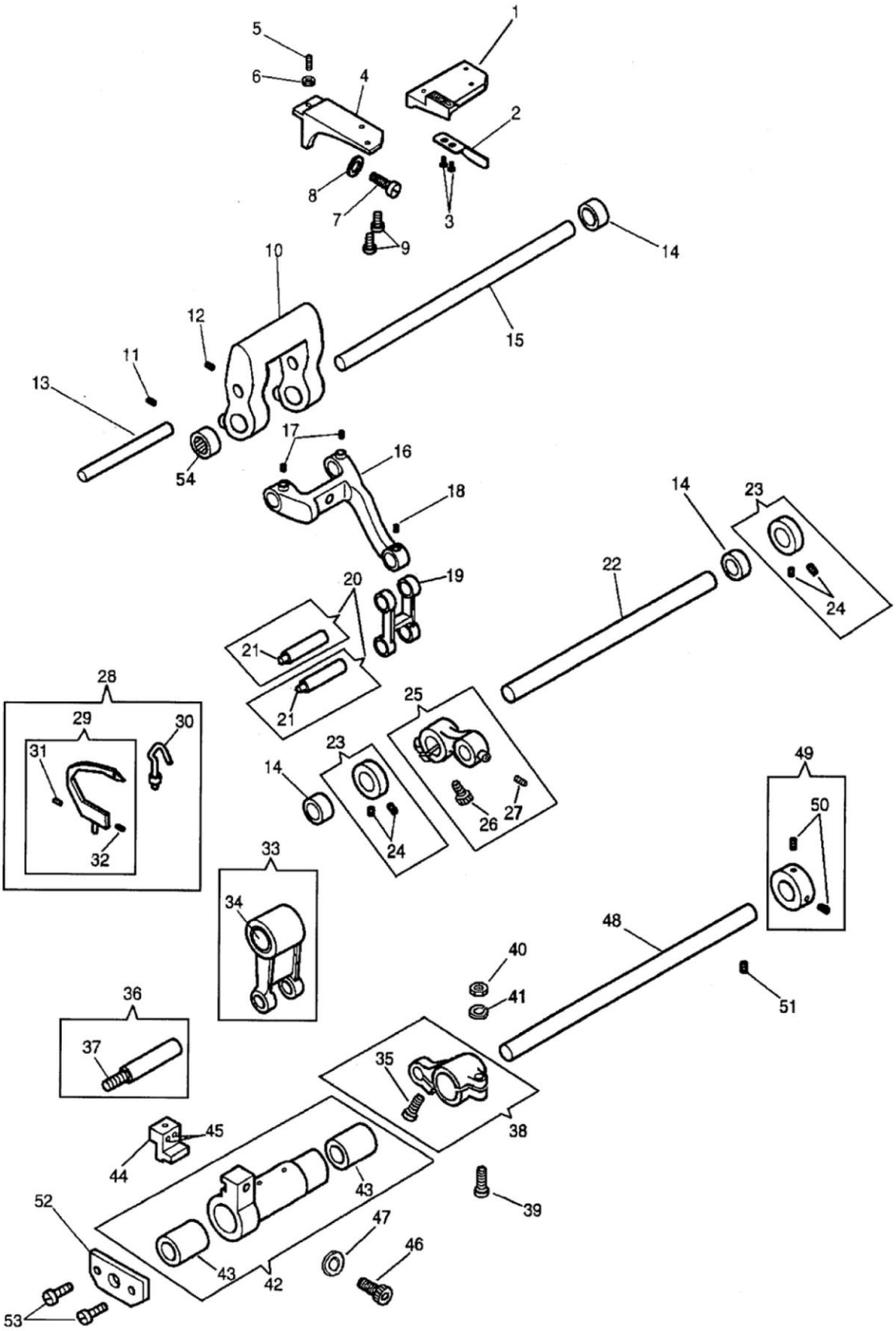
1
2
3
4
5
6
7
8
9
10
11
12
13
14
15
16
17
18
19
20
21
21
22
23
24
23
24
25
26
27
28
29
30
31
32
33
34
35
36
37
38
39
40
41
42
43
43
44
45
46
47
48
49
50
51
52
53
54

Front Assembly Sewing Bed

NO.	PART #	DESCRIPTION	NO.	PART #	DESCRIPTION
1	559061	FEED DOG	28	281208	LOOPER COMPLETE WITH GUARD
2	267665	LOOP DEFLECTOR	29	268382	LOOPER ONLY (ORDER 281207 FOR
3	412176	LINK, CONN CRANK	30	281207	NEEDLE GUARD
4	559064	FEED DOG SHANK	31	141478	SCREW
5	414559	SCREW	32	141494	SCREW
6	541200	LOCK NUT	33	281223	LOOPER DRIVING CONNECTION CPL
7	414750002	SCREW	34	415500	BUSHING
8	543804004	WASHER	35	414516	SCREW
9	374107003	SCREW	36	268208	CRANK HINGE PIN
10	559049	FEED DRIVE ROCK FRAME	37	268258	PACKING WICK
11	549024	SCREW	38	415174	LOOPER CARR CR CPL
12	500264833	FEED DRIVING ROCK FRAME SET SCREW	39	415292	CLAMPING STUD
13	559051	FEED BAR HINGE PIN	40	541198	NUT
14	415297	BUSHING	41	548459	WASHER
15	268070	SHAFT, DRIVE ROCK	42	559041	LOOPER CARRIER
16	559045	FEED BAR	43	415500	BUSHING
17	270 544204001	SCREW	44	559055	LOOPER HOLDER CPL
18	545213	SET SCREW	45	414558	SCREW
19	268078	FEED LIFTING LINK	46	414750002	SCREW
20	268079	LINK HINGE PIN	47	543804004	WASHER
21	268258	PACKING WICK	48	269617	CARRIER SHAFT
22	559052	FEED LIFTING ROCK SHAFT	49	415172	SHAFT COLLAR
23	415065	COLLAR COMP	50	270 544204001	SCREW
24	504020	SCREW (300UX5)	51	544209003	SCREW
25	415204	CRANK	52	559044	LOOPER CARRIER SHAFT SUPPORTIN
26	414501	SCREW	53	200100	SCREW
27	545213	SET SCREW	54	415297	NEEDLE BEARING

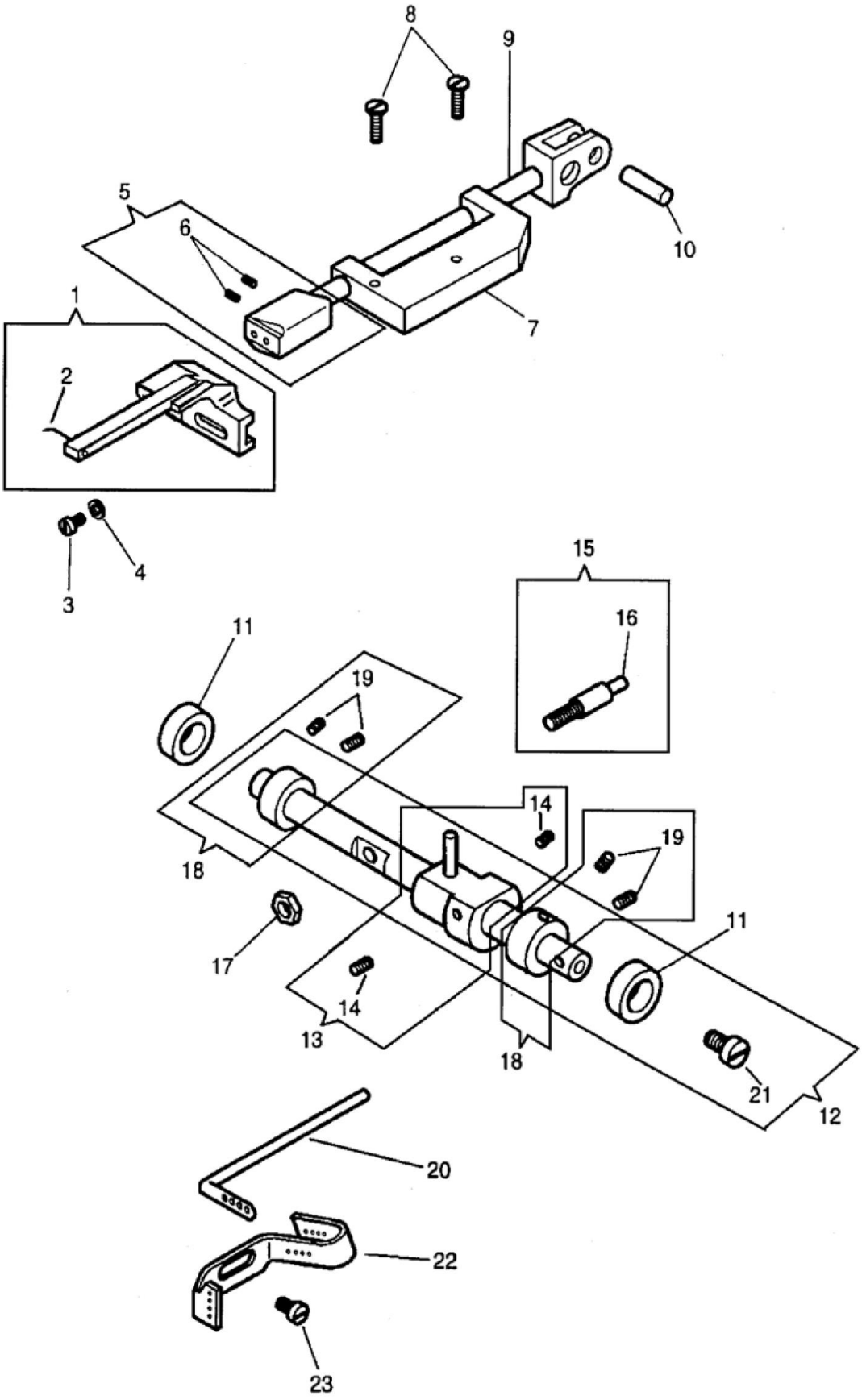
8
9
5
6
10
1
7
2
4
3
15
16
11
19
14
19
18
17
11
14
13
18
21
12
20
22
23

Cross Shaft in Sewing Bed

NO.	PART #	DESCRIPTION
1	281975	SPREADER
2	268162	SPREADER POINT
3	414552	SCREW
4	547670	WASHER
5	415196	SPREADER HOLDER
6	414529	SCREW
7	268184	SPREADER BAR BRACKET
8	414524	SCREW
9	559065	SPREADER BAR
10	268190	SPREADER DRIVE PIN
11	415297	BUSHING
12	415389	ROCK SHAFT
13	415194	CRANK COMP
14	270 544204001	SCREW
15	281249	SPREADER DRIVING ROCK SHAFT SC
16	32825	OIL WICK
17	545424	NUT
18	415065	COLLAR COMP
19	504020	SCREW (300UX5)
20	268052	LOOPER TAKE UP ROD
21	545385	SCREW
22	269619	THREAD GUIDE
23	414510	SCREW

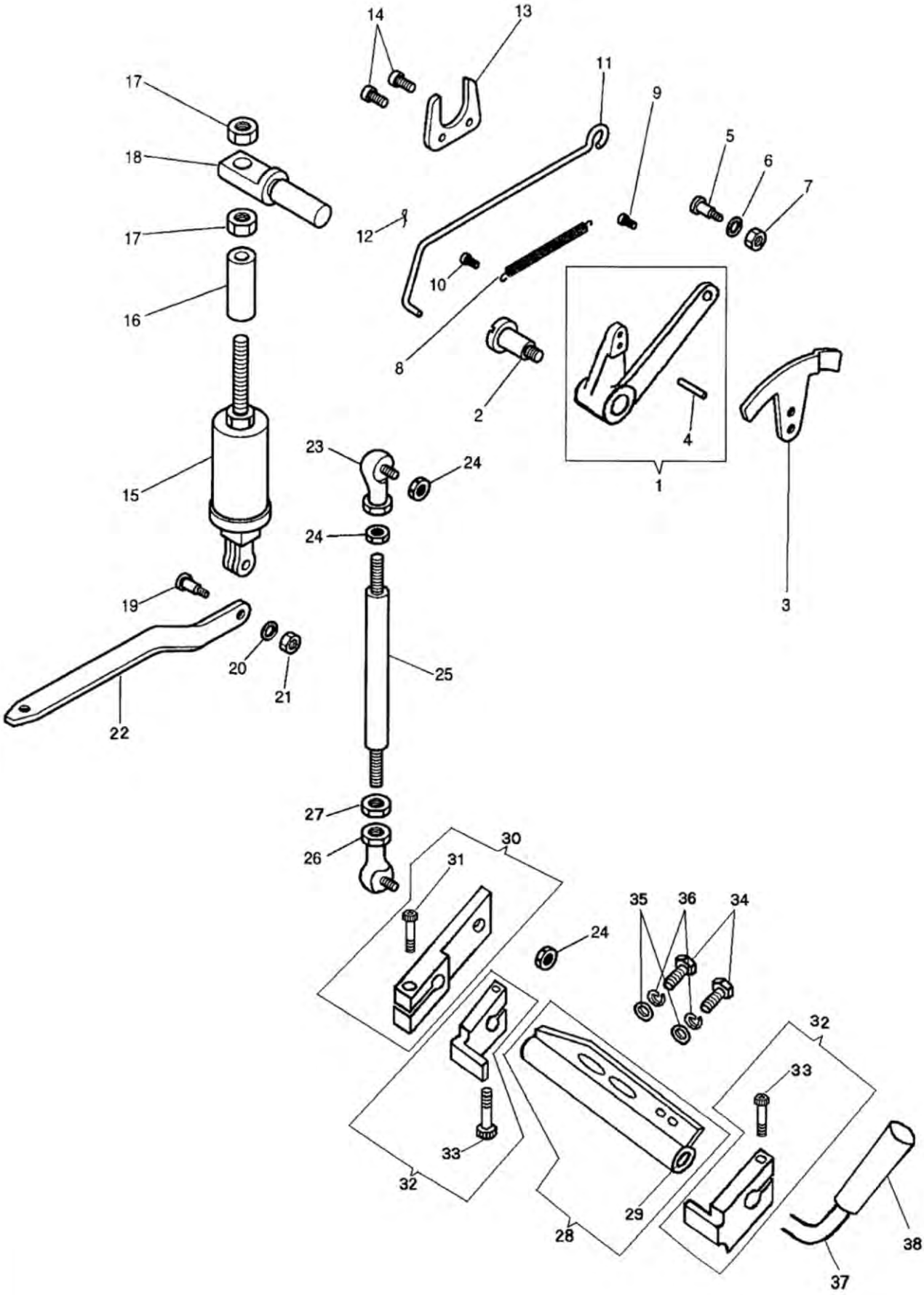
14
13
17
11
9
18
5
6
7
12
17
10
16
8
2
1
4
3
23
24
15
24
19
25
20
21
22
27
26
30
31
24
35
36
34
32
33
33
32
29
28
38
37

External Parts Sewing Arm #2

NO.	PART #	DESCRIPTION
1	KE0085	FOOT LIFTER LEVER
2	201363	SCREW 300W
3	267707	RELEASING PLATE
4	543850001	PLATE PIN
5	414577	HINGE SCREW
6	543804004	WASHER
7	541166003	NUT
8	204348	SWITCH SPRING
9	414570	SCREW
10	544336	STUD SCREW
11	267704	LIFTER LEVER ROD
12	248423	COTTER PIN
13	267650	RETAINER
14	545205451	SCREW, WHITE
15	415106	PRESSER BAR SPRING HOUSING ASS
16	559077	PRESSER BAR SPRING HOUSING COL
17	541198	NUT
18	267714	HOUSING SUPPORT
19	414567	HINGE SCREW
20	548154	SCREW WASHER
21	545405	NUT
22	267738	PR BAR SPR ARM
23	412373	CONNECTION (UPPER)
24	541166001	NUT
25	559068	LIFTING ROD
26	559067	LIFTING ROD CONNECTION (LOWER)
27	414774	NUT
28	KE0026	FOOT LIFT PIVOT COMPLETE
29	KE0030	BUSHING
30	KE0083	FOOT LIFT LEVER COMPLETE
31	414753004	BELT TENSION BRACKET SET SCREW
32	KE0084	STOP COLLAR COMPLETE
33	414750004	PRESSER BAR SPRING ARM FULCRUM
34	544499072	SCREW
35	270 543803005	WASHER
36	270 543805005	WASHER
37	KE0034	PIVOT ARM
38	KE0035	HANDLE

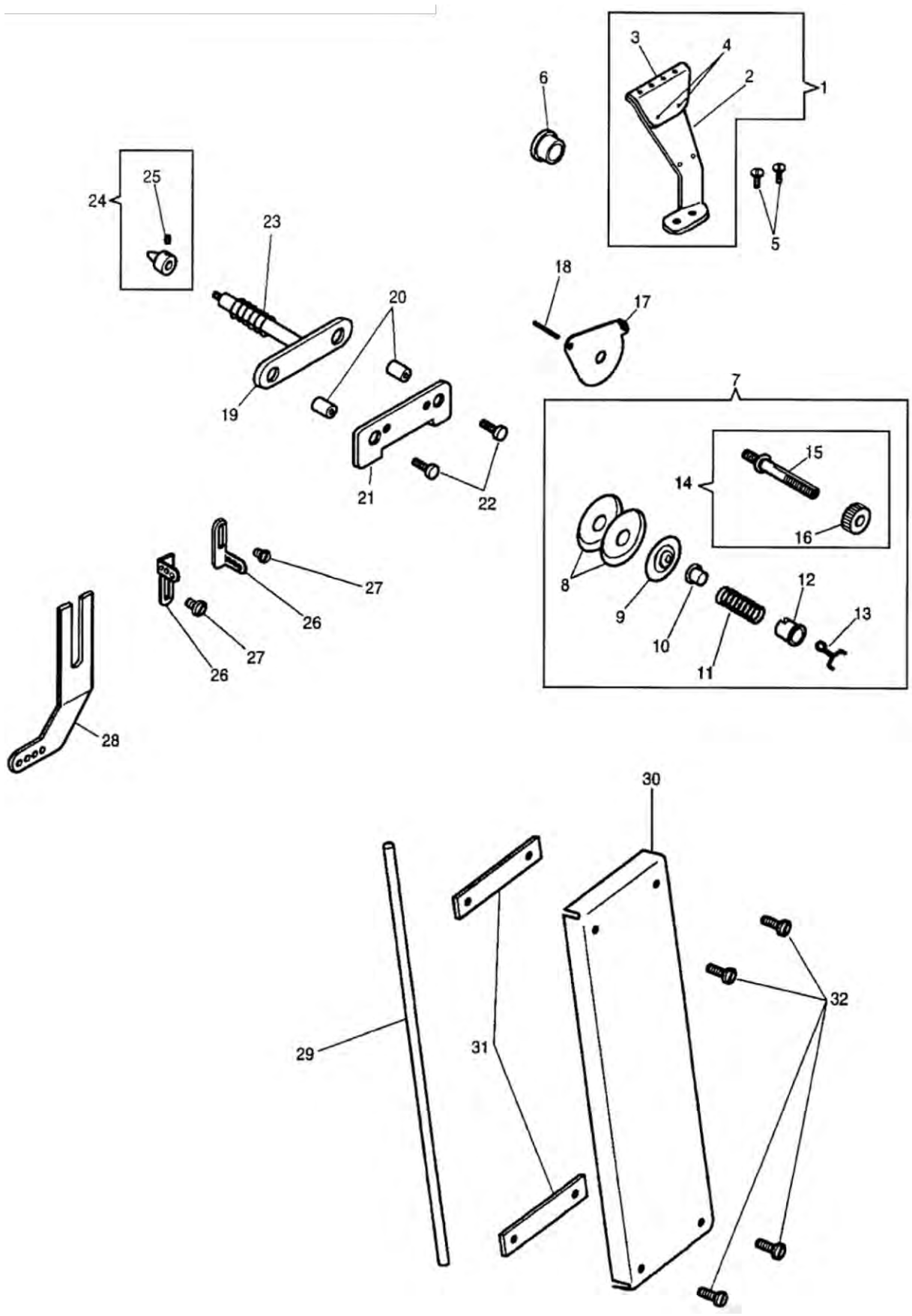
1
2
3
4
5
6
7
8
9
10
11
12
13
14
15
16
17
18
19
20
21
22
23
24
25
26
27
28
29
30
31
32

External Parts Sewing Arm #3

NO.	PART #	DESCRIPTION
1	268506	TH GUIDE BRACKET
2	268111	LOOPER BRACKET
3	268505	LOOPER TH GUIDE
4	50169	SCREW (5)
5	414537	SCREW
6	544875	PLUG
7	267971	THREAD TENSION
8	HA046072	TENSION DICS
9	32572	TENSION DISC (5)
10	59538	SPRING BUSHING
11	131741	TENSION SPRING
12	143657	BUSHING
13	143658	LOCKING SPRING
14	59539	TENSION SCREW STUD
15	59539	TENSION SCREW STUD
16	51570	NUT
17	54279	THREAD GUIDE
18	226206	LATCH SPRING PIN
19	415357	TENSION RELEASER
20	543853003	NEEDLE THREAD TENSION BRACKET
21	268167	TENSION BRACKET
22	544336	STUD SCREW
23	204365	SPRING
24	415252	RELEASER CAP
25	504048	SCREW
26	268513	N THREAD GUIDE
27	414514	SCREW
28	268312	THREAD GUIDE
29	268123	THREAD TUBE
30	415342451	LOOPER THREAD TUBE COVER
31	268500	GASKET
32	414639	GUIDE SCREW

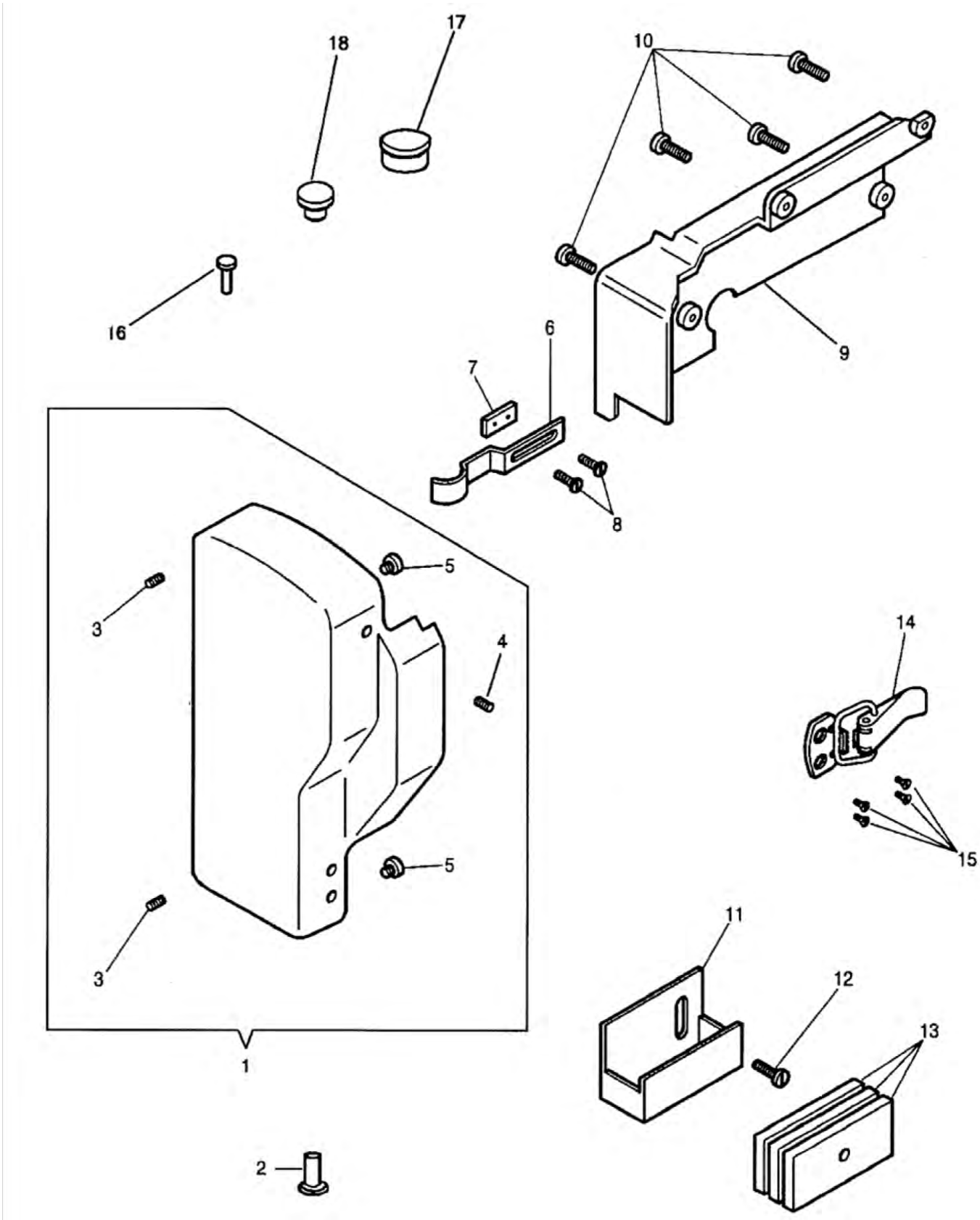
17
18
10
16
9
6
7
8
5
3
4
14
15
5
3
11
12
13
1
2

External Parts Sewing Arm #4

NO.	PART #	DESCRIPTION
1	KE0021	FACE PLATE (WITH 268033)
2	268330	FACE PLATE HINGE STUD
3	544053	SET SCREW
4	268033	LOCK STUD
5	228661	COVER CUSHION
6	268032	LOCK SPRING
7	415016	SPRING PLATE
8	414534	SCREW
9	KE0072	ARM SIDE COVER
10	545295	SCREW
11	267656452	THREAD LUBRICATOR
12	545385	SCREW
13	236957	OIL PAD,THREAD LUBRICATOR (FEL
14	559032	FACE PLATE LOCKER
15	374397002	FACE PLATE LOCKER SCREW
16	KE0007	FACE PLATE HINGE STUD
17	544875	PLUG
18	502986	PLUG

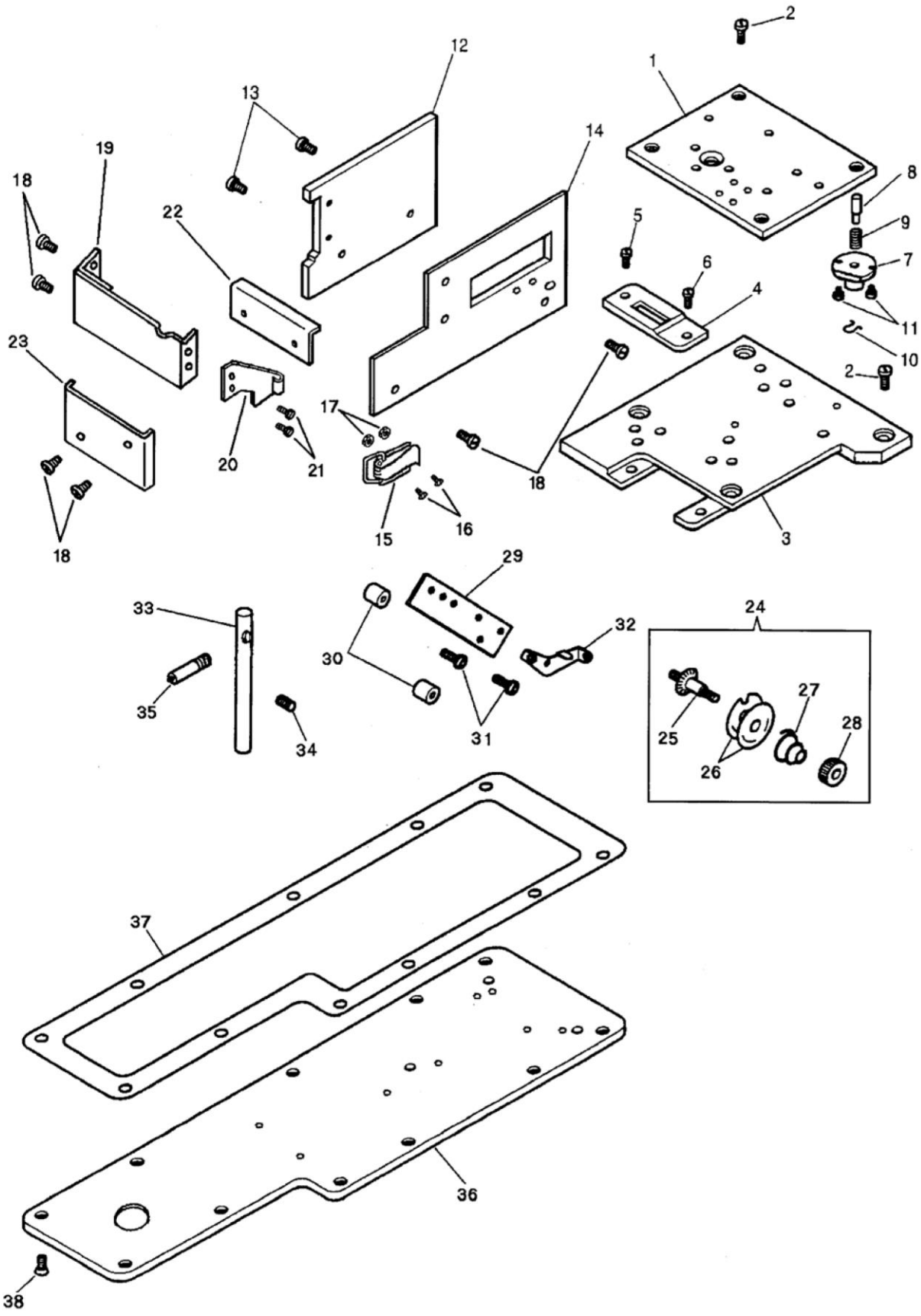
1
2
3
4
5
6
7
8
9
10
11
12
13
14
15
16
17
18
19
20
21
22
23
24
25
26
27
28
29
30
31
32
33
34
35
36
37
38

External Parts Sewing Arm #5

NO.	PART #	DESCRIPTION
1	KE0073	BED PLATE (RIGHT)
2	414508	SCREW
3	KE0037	BED PLATE (LEFT)
4	559060	THROAT PLATE
5	374107001	THROAT PLATE SCREW (BACK)
6	200100	SCREW
7	KE0075	FEED REGULATING STUD SOCKET
8	268081	STUD, FEED REG
9	270026	FEED REG STUD SPR
10	240245	RETAINING SPRING, (5PK)
11	545249452	FEED REGULATING STUD SOCKET SC
12	559075	BED COVER (BACK)
13	414520	SCREW
14	KE0068	BED COVER (FRONT)
15	KE0044	BED COVER (FRONT) LOCKER
16	270 544211051	STRIKER SCREW
17	541164001	NUT
18	544252	SET SCREW (300UX5)
19	KE0039	LOOPER COVER
20	KE0042	SNAP HOOK LATCH
21	544252	SET SCREW (300UX5)
22	559074	BED COVER (LEFT)
23	KE0043	END COVER
24	415294	TENSION COMP
25	415291	TENSION STUD
26	412203	TENSION DISC
27	10148	SPRING
28	541452	NUT
29	415255	TENSION BRACKET
30	543853003	NEEDLE THREAD TENSION BRACKET
31	414532	SCREW
32	268333	THREAD GUIDE
33	52239	LOOPER THREAD GUIDE
34	270 544211052	SCREW
35	559078	LOOPER THREAD GUIDE (PIPE)
36	KE0005	BOTTM PLATE
37	559034	BOTTOM PLATE GASKET
38	414533	SCREW

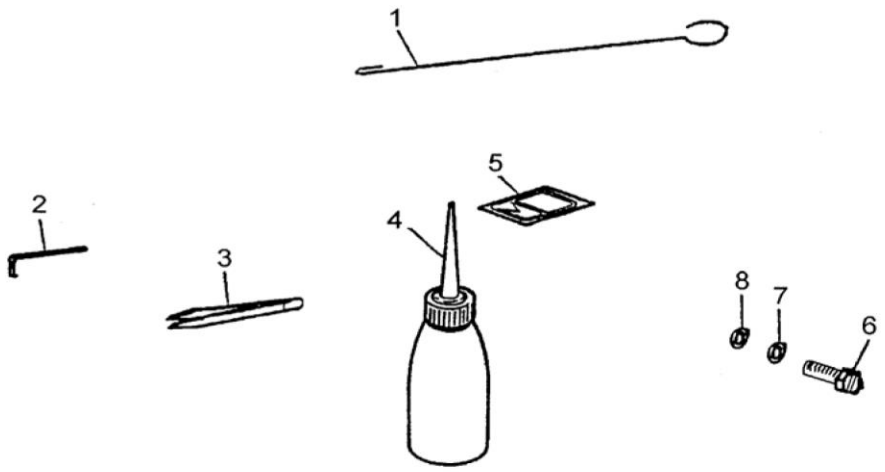

Accessories

NO.	PART NO.	DESCRIPTION
1	170 415377	THREADER WIRE
2	170 021887	WRENCH
3	270 BENTTWEEZER	BENT TWEEZERS, METAL
4	170 413448001	OILER
5	160 411201120	NEEDLE, 62X59
6	170 KE0015	BOLT
7	170 KE0016	WASHER
8	170 KE0017	SPRING WASHER

Assembly Drawings & Parts Lists

The materials contained herein are confidential and proprietary information of Atlanta Attachment Company. In addition to any confidentiality and non-disclosure obligations that currently exist between you and Atlanta Attachment Company, your use of these materials serves as an acknowledgment of the confidential and proprietary nature of these materials and your duty not to make any unauthorized use or disclosure of these materials.

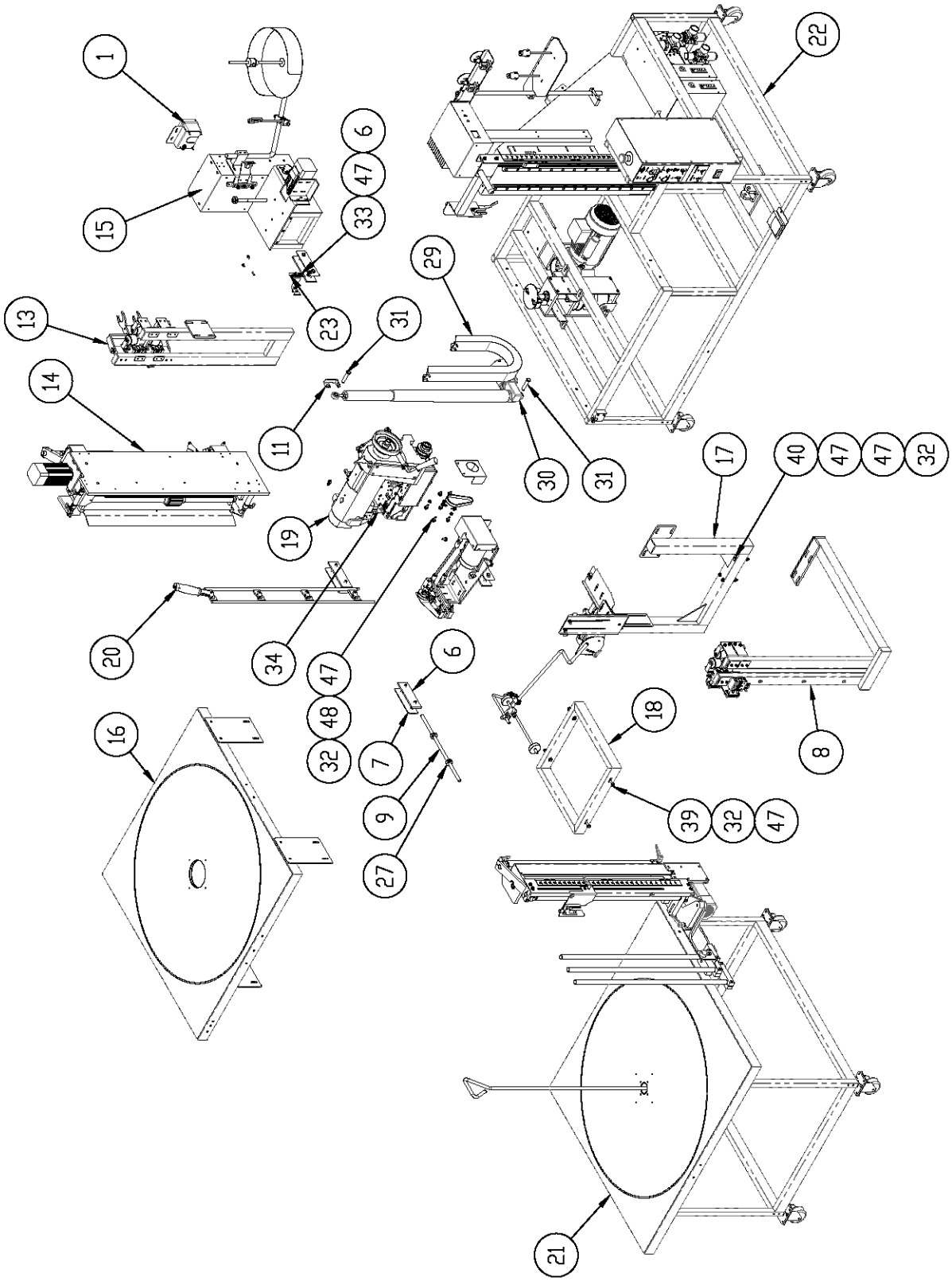
1
15
6
47
33
23
13
31
29
22
14
11
30
31
17
40
47
47
32
19
20
34
47
6
48
32
7
9
27
16
18
8
39
32
47
21

11349S88B Auto Faux Hemmer

AAC Drawing Number 9000008 Rev 6

NO.	QTY	PART#	DESCRIPTION	NO.	QTY	PART#	DESCRIPTION
1	1	1278-6010C	START/PAUSE BUTTON ASSY	25	*AR	1349B-WD	WIRING DIAGRAM
2	1	1322680	BRKT,STOP SWITCH	26	*1	1349LAB1	LABEL PACKAGE
3	1	13453612	BELT, GUARD	27	2	CCCL8F	CLAMP COLLAR- 1/2
4	*AR	1349-PAR	PARAMETER SETTINGS	28	1	GG124L050	BELT, 3/8P,, 1/2W
5	*AR	1349-PPAR	PARAMETER SETTINGS	29	1	MM45021-22	DUCT,WIRE
6	4	1349047	PLATE, NUT	30	1	MM85199-20	ACTUATOR, ELEC
7	4	1349048	PLATE, WASHER	31	2	MM97245A718	CLEVIS PIN 2.25LG STL
8	1	1349084	YOKE ASSY, ROLLER MTG	32	17	NNK1/4-20	KEP NUT, 1/4-20
9	1	1349123	ROD, SS 1/2 OD	33	2	NNK10-32	KEP NUT, 10-32
10	1	1349157	POINTER. SEW HEAD HGT	34	10	SN62X59	NEEDLE,SIZE 24/180
11	1	1349192	BRKT,ANTI-ROTATION	35	2	SSBC80016	#6-32 X 1/4 BUT HEAD
12	1	1349272	ADJ. FOLDER ASSEMBLY	36	2	SSBC98048	10-32 X 3/4 BUTTON
13	1	1349297	ASSY, IDLER TRANSFER	37	2	SSHC01040	1/4-20 X 5/8 HHCS
14	1	1349300	PULLER ASSY, 1349S88A	38	3	SSHC01048	1/4-20 X 3/4 HEX CAP
15	1	1349320	SEWING HEAD MOUNT	39	4	SSHC01160	1/4-20 X 2-1/2 HHCS
16	1	1349340	REWIND TABLE ASSEMBLY	40	4	SSHC01192	HEX HEAD BOLTS, 1/4
17	1	1349370	FLANGE / FOLD BLADE ASSY	41	4	SSHC25128	3/8-16 X 2 HEX CAP
18	1	1349382	FRAME, TABLE SPACER	42	4	SSHC25128	3/8-16 X 2 HEX HEAD
19	1	1349410	HEAD,GEN,TAPE EDGE	43	4	SSPS90040	8-32 X 5/8 PAN HD
20	1	1349438	SPINDLE, REWIND	44	17	SSSC01048	1/4-20 X 3/4" SOC
21	1	1349455	ASSY, INFEED TABLE	45	2	SSZS93032	SCREW, SHT.METAL
22	1	1349500	ASSY, MAIN CONSOLE	46	2	WWF10	WASHER, FLAT, #10
23	1	1349517	POINTER	47	39	WWFS1/4	WASHER,FLAT,SAE,1/4
24	*AR	1349B-PD	PNEUMATIC DIAGRAM	48	17	WWL1/4	WASHER,LOCK,1/4

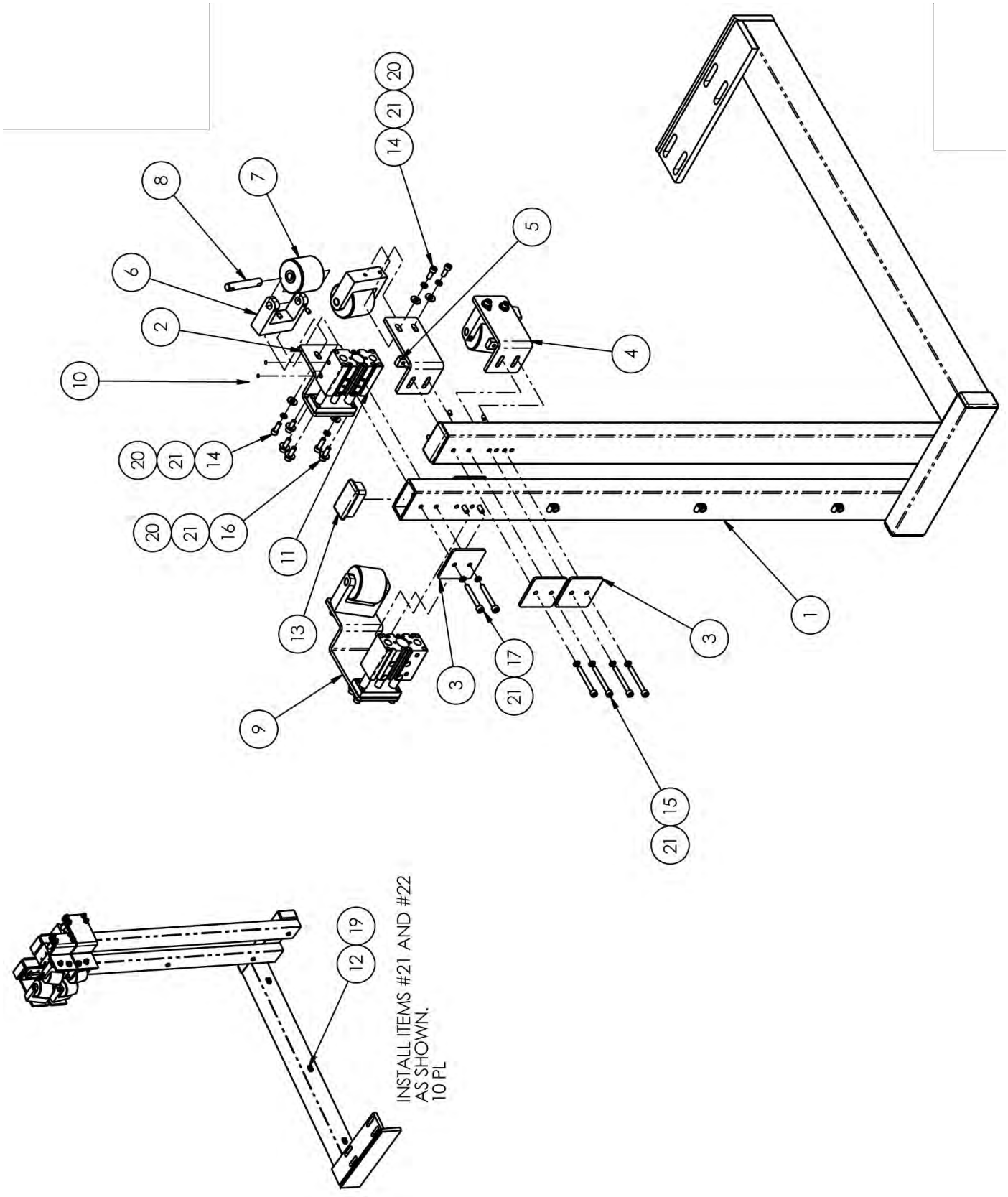
INSTALL ITEMS #21 AND #22
AS SHOWN.
10 PL

1349084 Yoke Assembly

AAC Drawing Number 1349084 Rev 2

NO.	QTY	PART #	DESCRIPTION
1	1	1349099	WELDMENT,FWD GUIDE ROLL
2	1	1349257	BRKT, ACTIVE GUIDE ROLLER
3	4	1349258	PLATE, WASHER
4	2	1349333	BRKT, FIXED GUIDE ROLLER
5	2	1349334	PLATE,NUT 10-32 24MM CTC
6	4	1349415	YOKE, 1.5" ROLLER
7	4	1349417	ROLLER,KNURLED,IDLER
8	4	1349418	SHAFT,FLATTED .375 X 2.25
9	1	1349501	BRKT, ACTIVE GUIDE ROLLER
10	4	AA198RA510	FLOW CONTROL,5/32X10-32
11	2	AACMGPM1620	CYLINDER,AIR,DUAL ROD
12	6	AAF1/8	1/8" PLASTIC CLAMP
13	4	MM132-1496	PLUG 1 X 2
14	8	SSSC98032	10-32X1/2, SOC CAP
15	4	SSSC98112	SCR, SOC CAP 10-32 X 1-3/4
16	8	SSSCM5X16	SCREW,SOC CAP,M5-0.8 X 16
17	4	SSSCM5X40	SCREW,SOCKET CAP,M5X40
18	12	SSSS90016	#8-32 X 1/4 SET SCREW
19	10	SSZS93032	SCREW, SHT.METAL 10 ZIP
20	16	WWFS10	WASHER, FLAT, #10, SAE
21	24	WWL10	WASHER,LOCK,#10,S/S

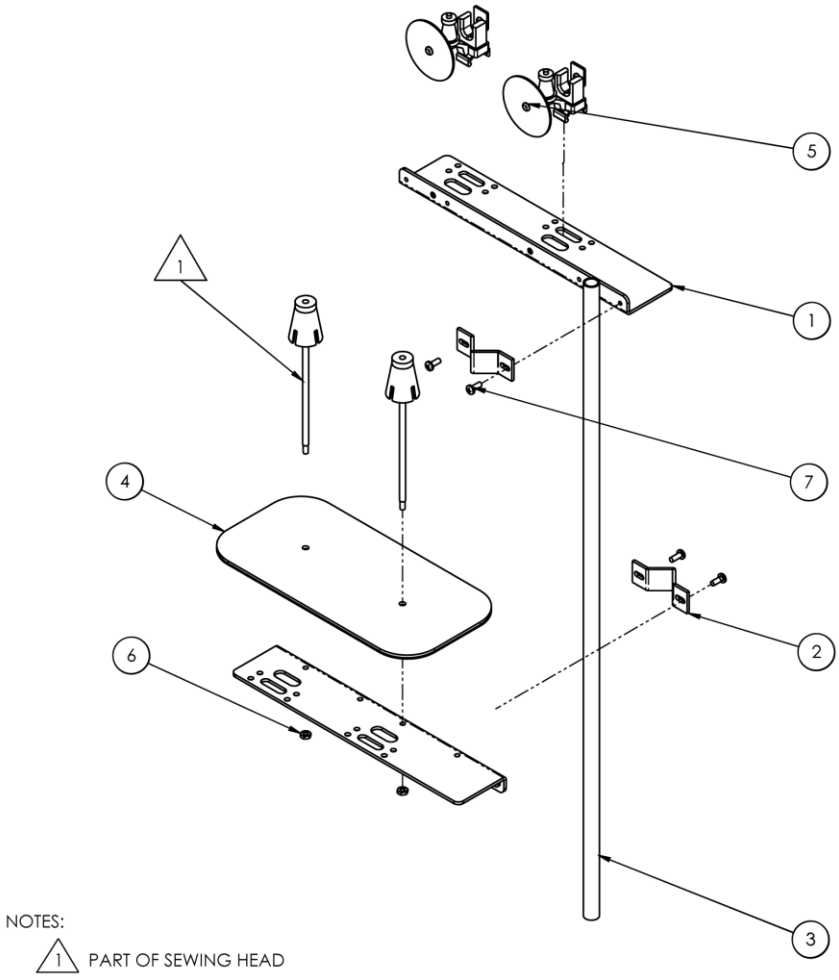

1349090 Thread Stand Assembly

AAC Drawing Number 1349090 Rev 0

NO.	QTY	PART #	DESCRIPTION
1	2	0411-069B	BRKT, THREAD BREAK DETECT
2	2	0411-070	CLAMP, SENSOR BRACKET
3	1	1349093	POLE, THREAD STAND
4	1	1959-112	2 POS THREAD PLATE ASSY
5	2	4003-IS3WT2	SENSOR,THREAD BREAK
6	2	NNH10-32	HEX-NUT 10-32 REG.
7	4	SSPP98032	10-32 X 1/2 PAN PHIL

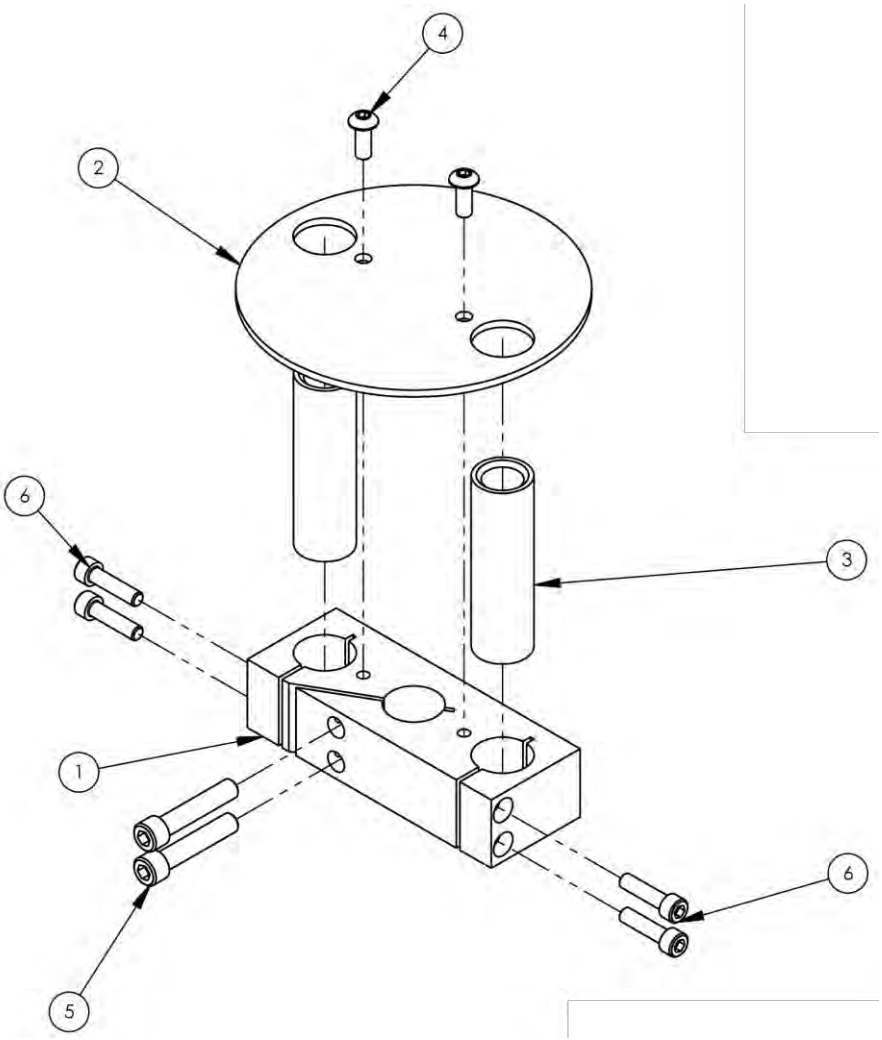

1349345 Rewinder Receiver Assembly

AAC Drawing Number 1349345 Rev 3

NO.	QTY	PART #	DESCRIPTION
1	1	1349341	CLAMP, REWIND SLEEVE
2	1	1349342	PLATE, REWIND SLEEVE
3	2	1349343	SLEEVE, REWIND ROD
4	2	SSBC98032	#10-32 X 1/2 BUT HEAD
5	2	SSSC01080	1/4-20 X 1-1/4 SOC CAP
6	4	SSSC98048	#10-32 X 3/4 SOC CAP

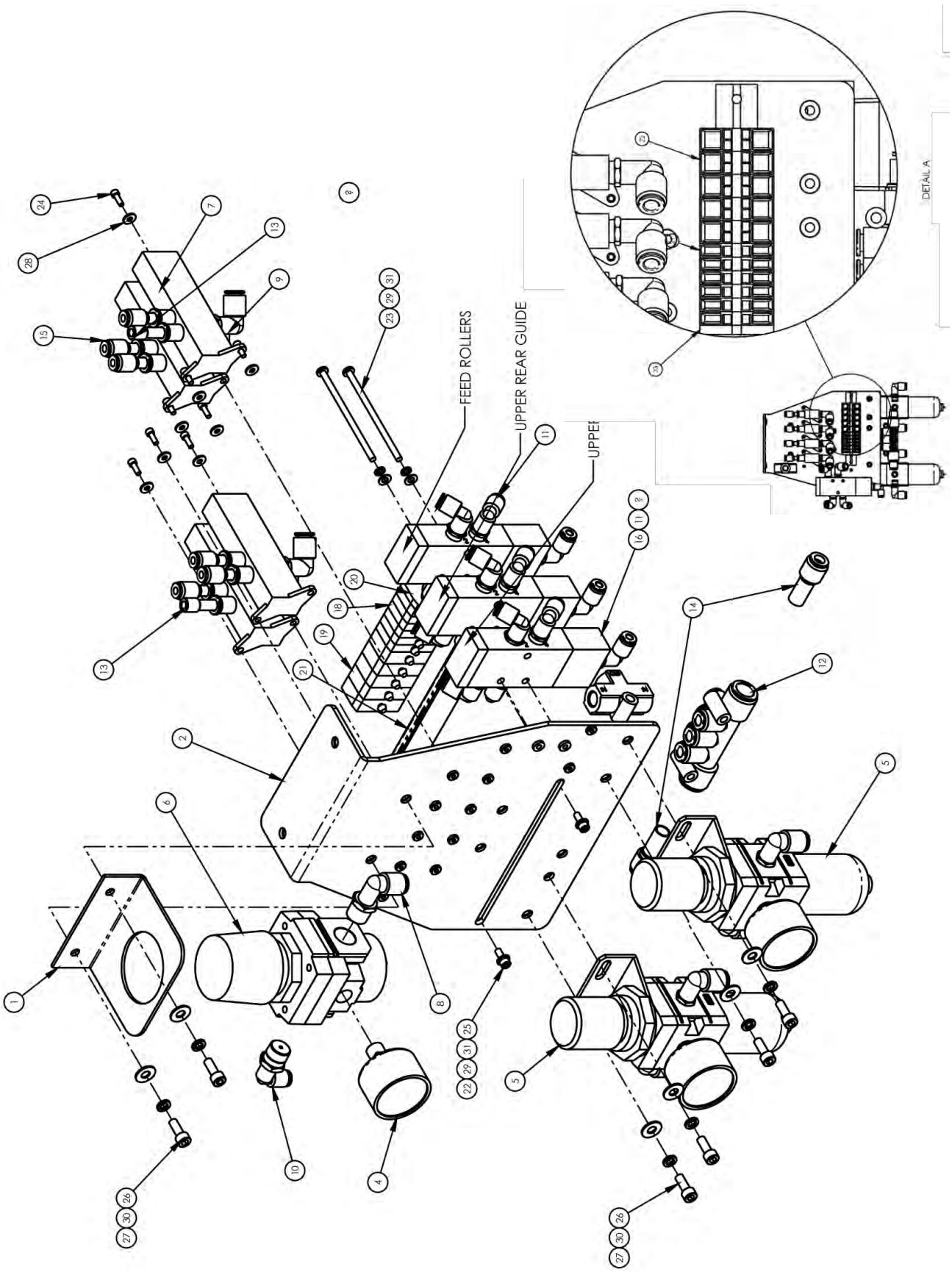
FEED ROLLERS
UPPER REAR GUIDE
DETAIL A

1349156 Pneumatic Panel Assembly

AAC Drawing Number 1349156 Rev 6

NO.	QTY	PART #	DESCRIPTION
1	1	0411-071	BRKT,REGULATOR
2	1	1338-024	PANEL, PNEUMATIC
3	*AR	1349B-PD	DIAGRAM,PNEUMATIC
4	1	AA198-503	0-30PSI AIR GAGE 1/8NPT
5	2	AA198-5102	REGULATOR W/GAUGE & NUT
6	1	AA198-RP3	REGULATOR,PRECISION AIR
7	4	AAEVQZ2121	VALVE, BODY PORTED
8	1	AAQME-4-4	ELBOW, MALE,1/4X1/4NPT
9	5	AAQME-4-8	ELBOW,QUICK MALE,1/4X1/8
10	1	AAQME-5-4	ELBOW, MALE 5/32X1/4NPT
11	13	AAQME-5-8	QUICK MALE ELBOW
12	1	AAQMF-144	6-STATION AIR MANIFOLD
13	2	AAQPP-07	QUICK PLUG 1/4
14	2	AAQPR-3-4	QUICK REDUCER 3/8-1/4
15	6	AAQPR-5-4	QUICK PLUG-IN REDUCER
16	3	AAV125B	PILOT VALVE
17	1	AAVS125	SHUTTLE VALVE,1/8"PORT
18	6	FF264-311	TERMBLK,WAGO,TOP,SINGLE,GRY
19	5	FF264-341	TERMBLK,WAGO,TOP,DUAL,GRY
20	1	FF264-371	TERMBLK,WAGO,TOP,END
21	1	FF264-3BKT5	MOUNT, WAGO, 9 DBLS
22	2	NNH6-32	NUT,HEX,6-32
23	2	SSPP80192	#6-32X1/2 PAN PHILLIPS
24	8	SSSC70020	#4-40 X 5/16 SOCKET CAP
25	2	SSSC80024	6-32 X 3/8 SOC CAP SC
26	6	SSSC98032	10-32X1/2, SOC CAP
27	6	WWF10	WASHER, FLAT, #10, COM
28	8	WWF4	WASHER, FLAT, #4
29	4	WWFS6	WASHER, FLAT, #6
30	6	WWL10	WASHER,LOCK,#10
31	4	WWL6	WASHER,LOCK,#6

Page 101

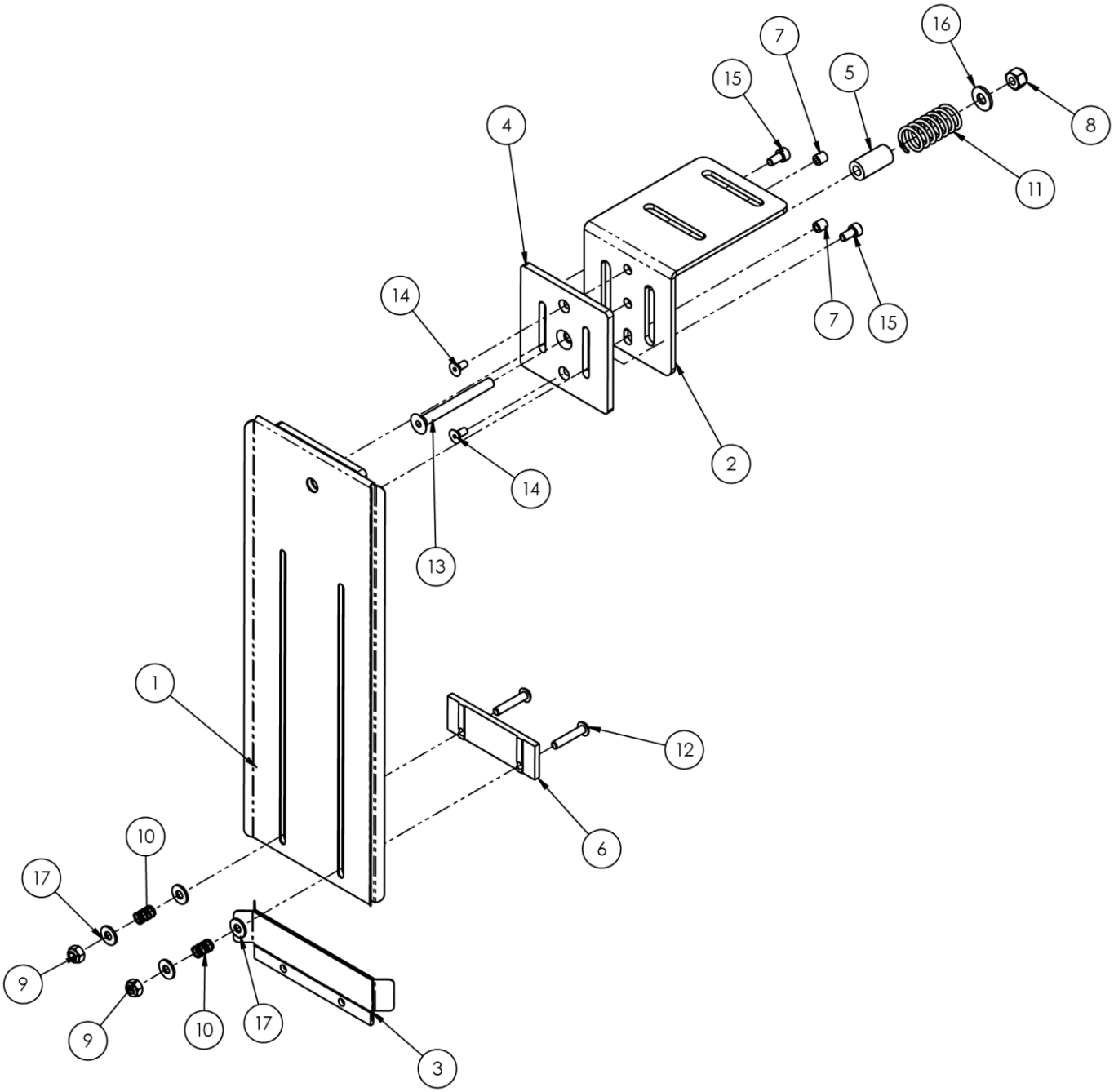
16
7
15
5
8
4
11
14
7
15
2
14
13
1
12
6
10
17
9
9
10
17
3

1349228 Flange Guide Assembly

AAC Drawing Number 1349228 Rev 0

NO.	QTY	PART #	DESCRIPTION
1	1	1349229	GUIDE, FLANGE
2	1	1349238	BRKT., GUIDE MOUNT
3	1	1349239	SLIDE GUIDE ASSY.
4	1	1349268	MOUNT, FLANGE GUIDE
5	1	1349506	SPACER, SPRING
6	1	1349509	SLIDE PLATE, GUIDE
7	2	3200312	GUIDE PIN, THREADED
8	1	NNE1/4-20	NUT,ELASTIC LOCK,1/4-20
9	2	NNE10-32	NUT,ELASTIC LOCK
10	2	RRLC026E1	SPRING,COMP .026X.36X.50
11	1	RRLC085J-6	SPRING, COMP. .720OD 2.0
12	2	SSBC98064	#10-32 X 1 BUT HEAD
13	1	SSFC01160	1/4-20 X 2-1/2 FLAT ALLEN
14	2	SSFC90024	#8-32 x 3/8 FLAT ALLEN
15	2	SSSC98024	#10-32 X 3/8 SOC CAP
16	1	WWFS1/4	WASHER FLAT, 1/4
17	4	WWFS10	WASHER, FLAT #10

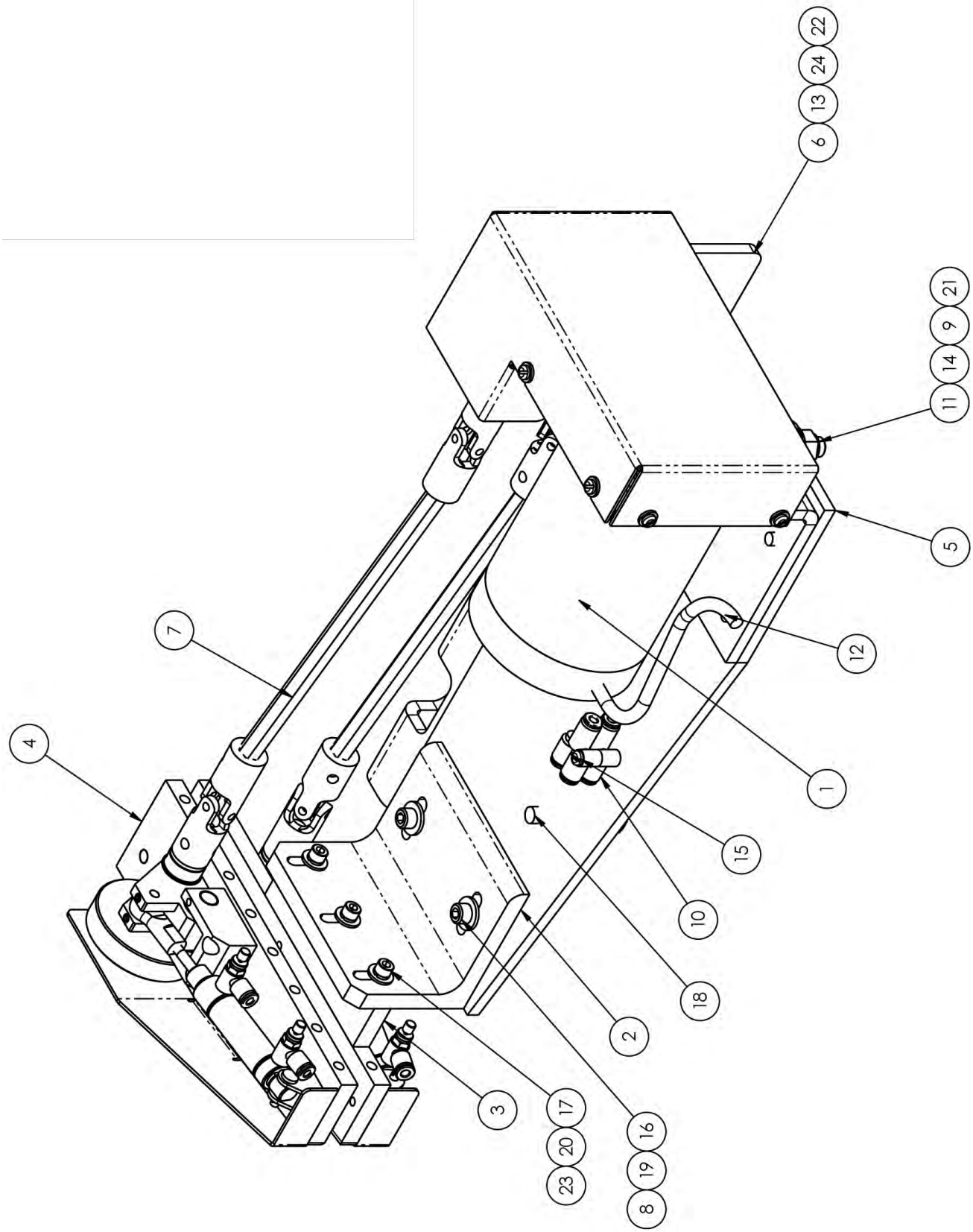
22
24
13
6
21
9
14
11
5
12
1
15
10
18
2
16
19
8
17
20
23
3
7
4

1349272 Folder Adjustment Assembly

AAC Drawing Number 1349272 Rev 0

NO.	QTY	PART #	DESCRIPTION	
1	1	1349279	PULLER MOTOR ASSEMBLY	Page 68
2	1	1349282	MOUNT, PIN GUIDE ASSY	
3	1	1349283	SPACER	
4	1	1349284	PIN GUIDE ASSEMBLY	Page 69
5	1	1349285	PLATE, PIN GUIDE BASE	
6	1	1349287	MOUNT, FOLDER RODS	
7	2	1349288	ROD, HEX, 3/8	
8	1	1349293	PLATE,NUT 1/4-20,2.50 CTC	
9	1	273-4F	SPRING,CMP,.09X.16X.38X.7	
10	2	AAQUY-5-5	QUICK UNION Y, 5/32	
11	1	NNE3/8-16	NUT, ELASTIC 3/8-16	
12	4	SSFC01040	1/4-20 X 5/8 FLAT ALN CAP	
13	3	SSHC20080	5/16-24 X 1-1/4 HEX CAP	
14	1	SSHC25128	3/8-16 X 2 HEX CAP	
15	1	SSPS80064	#6-32 X 1 PAN HD SLOT	
16	2	SSSC01064	1/4-20 X 1 SOC CAP	
17	3	SSSC98112	SCR, SOC CAP 10-32 X 1-3/4	
18	1	TTH32425	HANDLE,THRDED,5/16-18X3/4	
19	2	WWFS1/4	WASHER,FLAT,SAE,1/4	
20	3	WWFS10	WASHER, FLAT, #10, SAE	
21	2	WWFS3/8	WASHER,FLAT,SAE,3/8	
22	4	WWFS5/16	WASHER,FLAT,SAE,5/16	
23	3	WWL10	WASHER,LOCK,#10,S/S	
24	3	WWL5/16	WASHER, LOCK, 5/16	

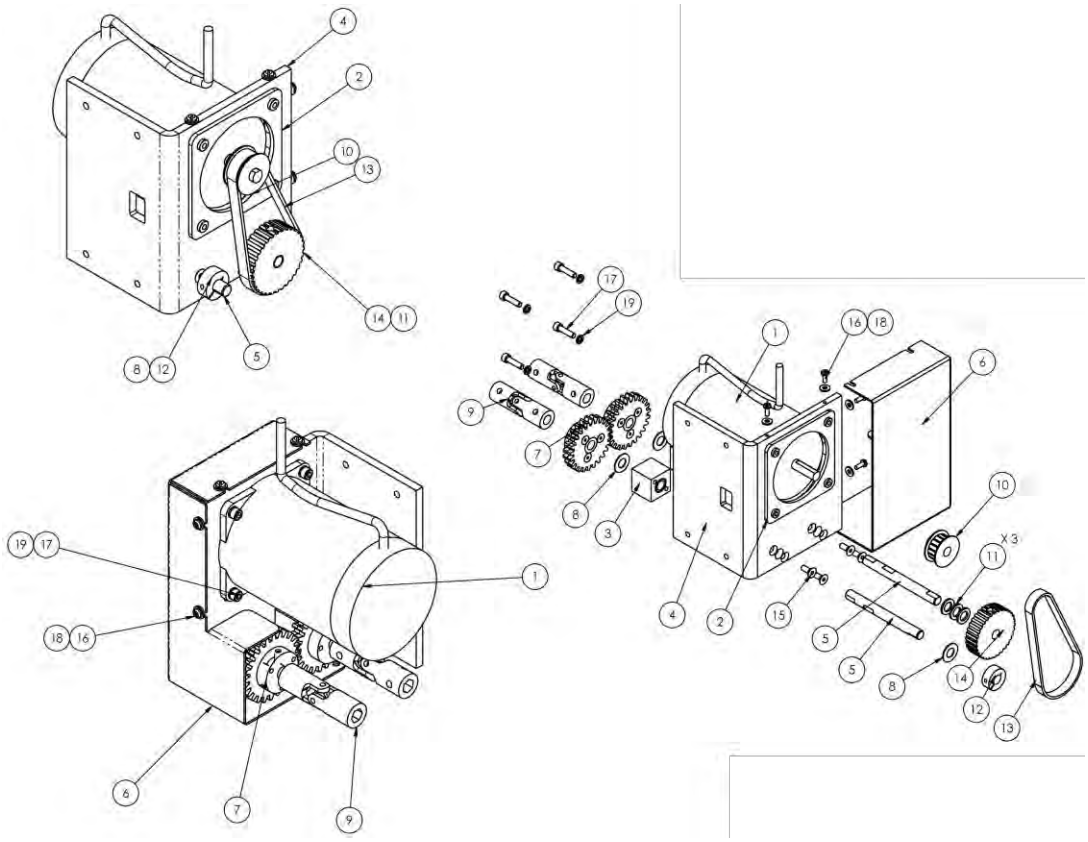

1349279 Puller Motor Assembly

AAC Drawing Number 1349279 Rev 1

NO.	QTY	PART #	DESCRIPTION
1	1	011-020	MOTOR, STEPPER W/PLUG
2	1	0411-016	PLATE,NUT,MOTOR MOUNT
3	2	1335-119	BLOCK, BEARING
4	1	1349280	MOUNT, MOTOR
5	2	1349281	SHAFT,FLATTED,60C,.375
6	1	1349286	GUARD, BELT
7	2	1953-206	GEAR, AUX. DRIVE
8	3	3517	WASHER,THRUST,BRONZE
9	2	3524-06A	U-JOINT,MODIFIED
10	1	3554	PULLEY,GEAR,1/5 PITCH
11	3	BBTT604	BEARING,BRONZE,.385ID
12	1	CCCL6F	CLAMP COLLAR- 3/8
13	1	GG120XL037	BELT,GEAR,3/8P,3/8W
14	1	PP32AXL037M	PULLEY,GEAR,1/5P,32T,.375
15	4	SSFC98032	#10-32 X 1/2 FLAT ALLEN
16	4	SSPS80024	#6-32 X 3/8 PAN HD SLOT
17	4	SSSC98048	#10-32 X 3/4 SOC CAP
18	4	WWFS6	WASHER, FLAT, #6
19	4	WWL10	#10 LW

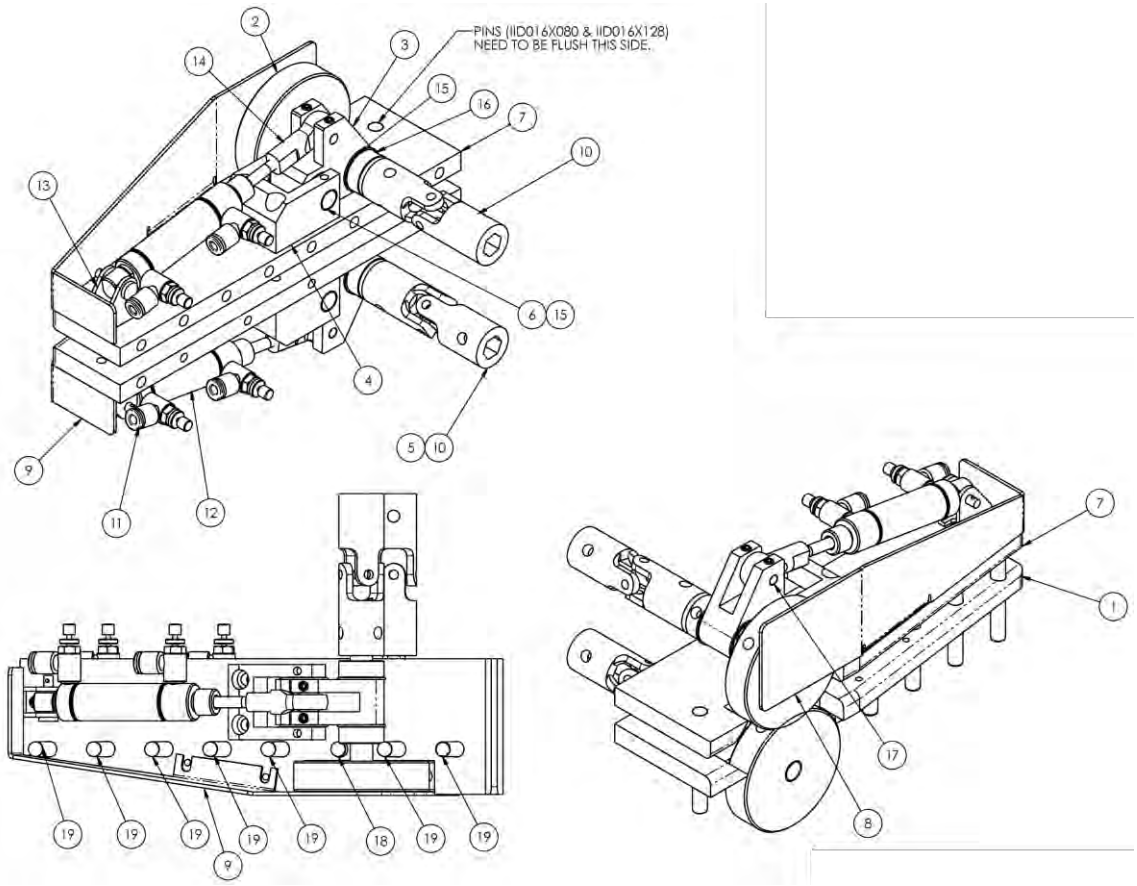

1349284 Pin Guide Assembly

AAC Drawing Number 1349284 Rev 1

NO.	QTY	PART #	DESCRIPTION
1	1	1349271	GUIDE, FOLDER, BOTTOM
2	2	1349273	ROLLER, PULLER
3	2	1349274	PIVOT, ROLLER
4	2	1349275	MOUNT, ROLLER PIVOT
5	2	1349276	SHAFT, ROLLER
6	2	1349277	SHAFT, PIVOT
7	1	1349278	GUIDE, FOLDER, TOP
8	1	1349289	GUARD, ROLLER
9	1	1349290	GUARD, ROLLER
10	2	3524-06A	U-JOINT,MODIFIED
11	4	AA198RA510	FLOW CONTROL,5/32X10-32
12	2	AAC8DP-.5	CYL,AIR,DA,9/16 B,1/2S
13	2	AAFBP-8C	BRKT,PIVOT,5/32 BORE
14	2	BBAW-3Z	BRG,ROD END,F, 10-32
15	8	BBTRA613	WASHER,THRUST,STL, .375B
16	4	CCSC6F3_8	COLLAR,SET 3/8
17	2	IID012X048	DOWEL PIN,3/16 X 3/4
18	1	IID016X080	DOWEL PIN,1/4 X 1-1/4
19	7	IID016X128	DOWEL PIN,1/4 X 2

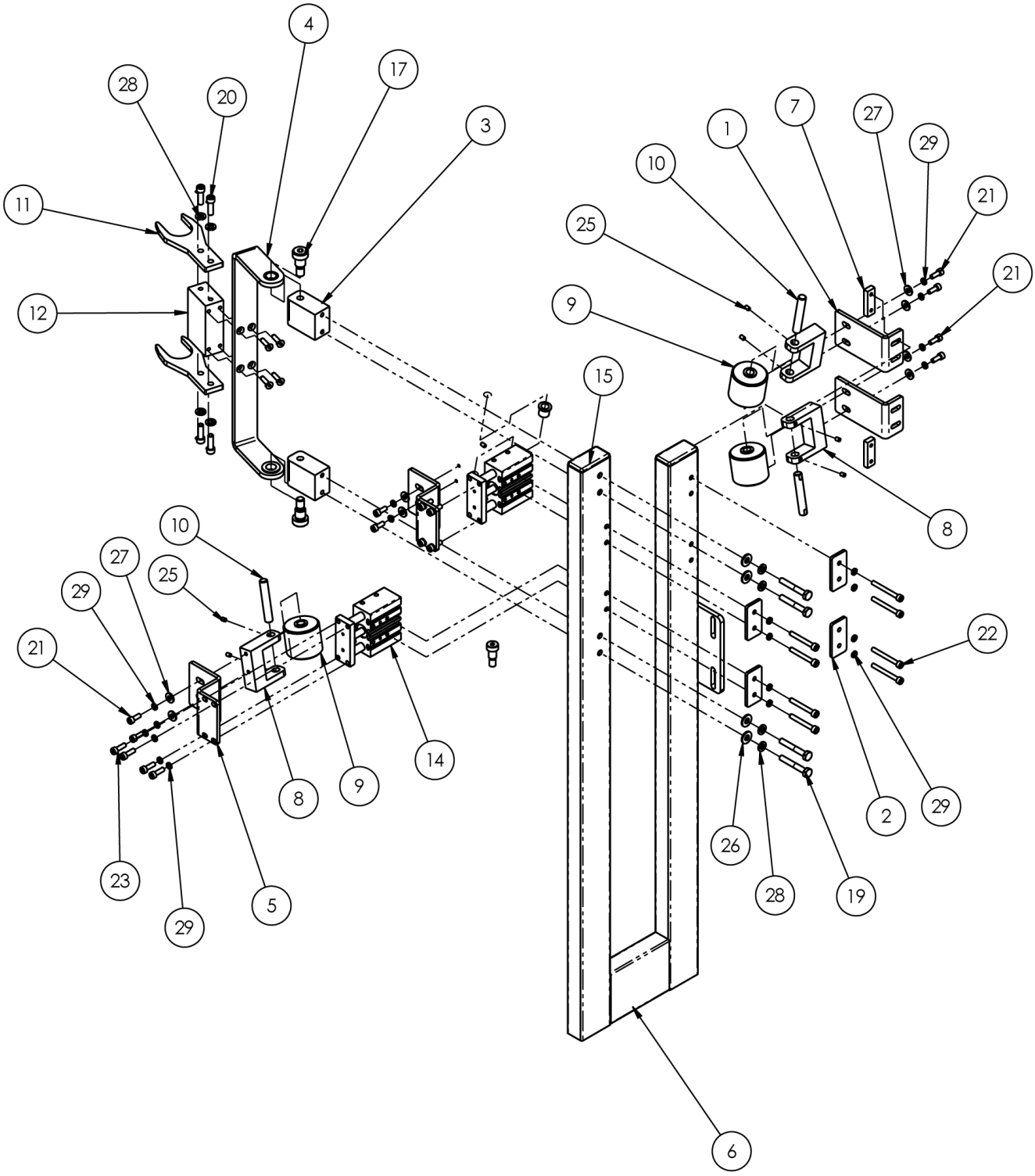
4
17
28
20
3
11
12
1
7
27
29
10
21
25
21
9
15
8
10
27
25
29
21
22
14
9
8
2
29
26
28
19
23
29
5
6

1349297 Idler Transfer Assembly

AAC Drawing Number 1349297 Rev 0

NO.	QTY	PART #	DESCRIPTION
1	2	1349055	BRKT, FIXED GUIDE ROLLER
2	4	1349056	PLATE, WASHER
3	2	1349058	BLOCK,ARM MTG
4	1	1349059	ARM, IDLER TRANSFER
5	2	1349257	BRKT, ACTIVE GUIDE ROLLER
6	1	1349298	U FRAME, PULLER
7	2	1349334	PLATE,NUT 10-32 24MM CTC
8	4	1349415	YOKE, 1.5" ROLLER
9	4	1349417	ROLLER,KNURLED,IDLER
10	4	1349418	SHAFT,FLATTED .375 X 2.25
11	2	1349447	FORK,IDLER TRANSFER
12	1	1349452	SPACER, IDLER FORK
13	4	AA198RA510	FLOW CONTROL,5/32X10-32
14	2	AACMGPM1620	CYLINDER,AIR,DUAL ROD
15	2	MM132-1496	PLUG 1 X 2
16	1	SSAS024032	SHULDER BOLT 3/8 X .50L
17	2	SSAS032032	1/2 X 1/2 X 3/8-16 SHLD, BOLT
18	4	SSFC98048	#10-32 X .75 SHCSF
19	4	SSHC01112	HEX HEAD BOLT 1/4-20X1.75
20	4	SSSC01048	1/4-20 X 3/4" SOC CAP SC
21	8	SSSC98032	10-32X1/2, SOC CAP
22	4	SSSC98112	SCR, SOC CAP 10-32 X 1-3/4
23	8	SSSCM5X16	SCREW,SOC CAP,M5-0.8 X 16
24	4	SSSCM5X40	SCREW,SOCKET CAP,M5X40
25	8	SSSS90016	#8-32 X 1/4 SET SCREW
26	4	WWFS1/4	WASHER,FLAT,SAE,1/4
27	8	WWFS10	WASHER, FLAT, #10, SAE
28	8	WWL1/4	WASHER,LOCK,1/4
29	24	WWL10	WASHER,LOCK,#10,S/S

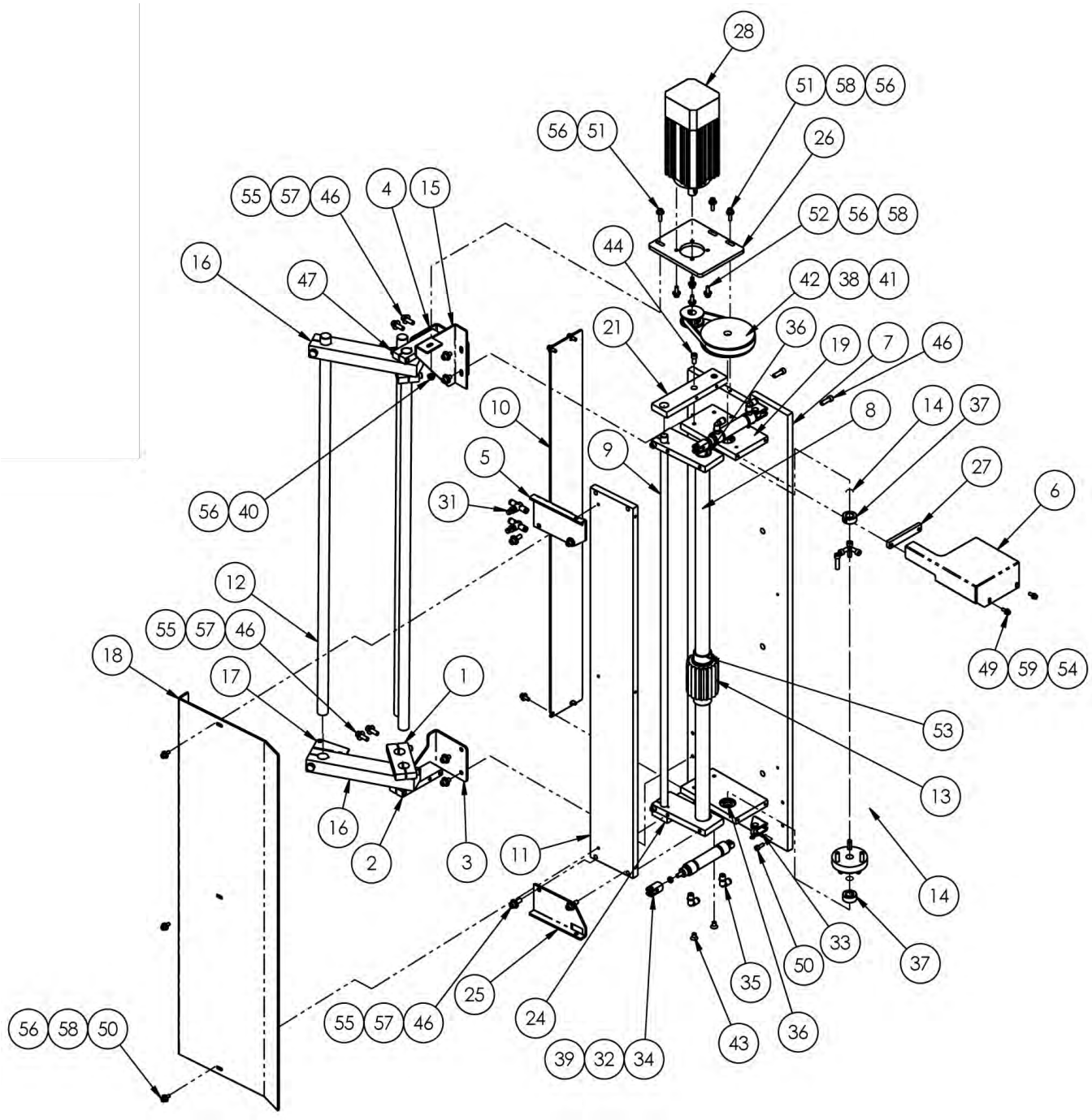
28
51 58 56
56 51
26
55 57 46
4
15
52 56 58
44
16
47
42 38 41
36
21
19
7
46
10
8
14
37
5
9
27
6
31
56 40
12
55 57 46
18
17
1
53
49 59 54
13
16
2
3
11
14
33
50
37
35
25
24
43
36
56 58 50
55 57 46
39 32 34

1349300 Puller Assembly

AAC Drawing Number 1349300 Rev 7

NO.	QTY	PART #	DESCRIPTION	NO.	QTY	PART #	DESCRIPTION
1	2	1349086	CLAMP. 2 X3/4 ROD, 1 GAP	31	2	AA2000F-03	FLOW CONTROL,INLINE,5/32
2	2	1349139	BLOCK, ROD MOUNT	32	2	AAC7DP-1	CYL.,AIR,DA 3/4 BORE,1STR
3	1	1349140	MOUNT, ROD	33	2	AAFBP-11C	BRKT,PIVOT,1/4 BORE
4	1	1349145	MOUNT, ROD	34	2	AAFCT-7	CLEVIS,AIR CYL, 1/4-28
5	1	1349159	LIFT BRKT	35	4	AAQME-5-8	QUICK MALE ELBOW
6	1	1349200	GUARD,PULLER	36	4	BB1L005	BEARING,BALL,.500D
7	1	1349301	PLATE, BASE, PULLER 30"	37	2	CC2X568	COLLAR,SET,1/2"
8	1	1349303	PULLER, IDLE AXEL 30"	38	1	GG150L050	BELT, 3/8P, 40T, 1/2W
9	1	1349304	ROD,STRA,CRS,1/2 X 33	39	2	NNH10-32	HEX-NUT 10-32 REG.
10	1	1349305	BOTTOM,GUARD,30" 1349	40	1	NNK10-32	KEP NUT, 10-32
11	1	1349306	PLATE, TOP, PULLER	41	1	PP10LF050M3	PULLEY,GEAR,3/8P,10T,14MM
12	3	1349307	ROD,SS,3/4 X 32.5L	42	1	PP30LB050M1	PULLEY 3/8P, 30T, 1/2 BORE
13	1	1349413	IDLE ROLLER, FLUTTED	43	2	SSFC01024	1/4-20 X 3/8 FLAT CAP
14	1	1349420	ROLL ASSY, 30" PULLER	44	6	SSSC01032	1/4-20X1/2 SOC CAP
15	1	1349421	BRACKET, MOTOR BRACE	45	2	SSSC01040	1/4-20 X 5/8" SOC CAP SC
16	2	1349429	CLAMP, ROD, PIVOT	46	14	SSSC01048	1/4-20 X 3/4" SOC CAP SC
17	1	1349430	CYLINDER BRACKET	47	2	SSSC01064	1/4-20 X 1 SOC CAP
18	1	1349445	GUARD, TOP PULLER	48	4	SSSC01096	1/4-20 X 1-1/2 SOC CAP
19	1	1961-302	LEFT SIDE PLATE	49	2	SSSC90032	#8-32 X 1/2 SOC CAP SC
20	1	1961-303	RIGHT SIDE PLATE	50	11	SSSC98032	10-32X1/2, SOC CAP
21	1	1961-304	HINGE PLATE,PULLER	51	3	SSSC98048	10-32 X 3/4 SOC CAP
22	1	1961-305	TOP LEFT SIDE PLATE	52	4	SSSCM5X16	SCREW,SOC CAP,M5-0.8 X 16
23	1	1961-306	TOP RIGHT SIDE PLATE	53	2	UUFF102-6	BEARING,FLG,1.003X1.254
24	1	1961-314	HINGE PLATE,PULLER	54	2	WWF8	WASHER, FLAT, #8
25	1	1961-315A	BRKT,LIFT	55	14	WWFS1/4	WASHER,FLAT,SAE,1/4
26	1	1961-317A	Motor Mtg. Bracket	56	15	WWFS10	WASHER, FLAT, #10, SAE
27	1	1961-323	SPACER, ALUM, 1/4	57	14	WWL1/4	WASHER,LOCK,1/4
28	1	4059-DC50A	MOTOR, LOW SPD, HIGH TORQ	58	13	WWL10	WASHER,LOCK,#10,S/S
29	1 ea	4059-EXT5	CABLE EXTENSION,9 PIN,54"	59	2	WWL8	WASHER,LOCK,#8
30	1 ea	4059-EXT6	CABLED EXTENSION,5 PIN,54"				

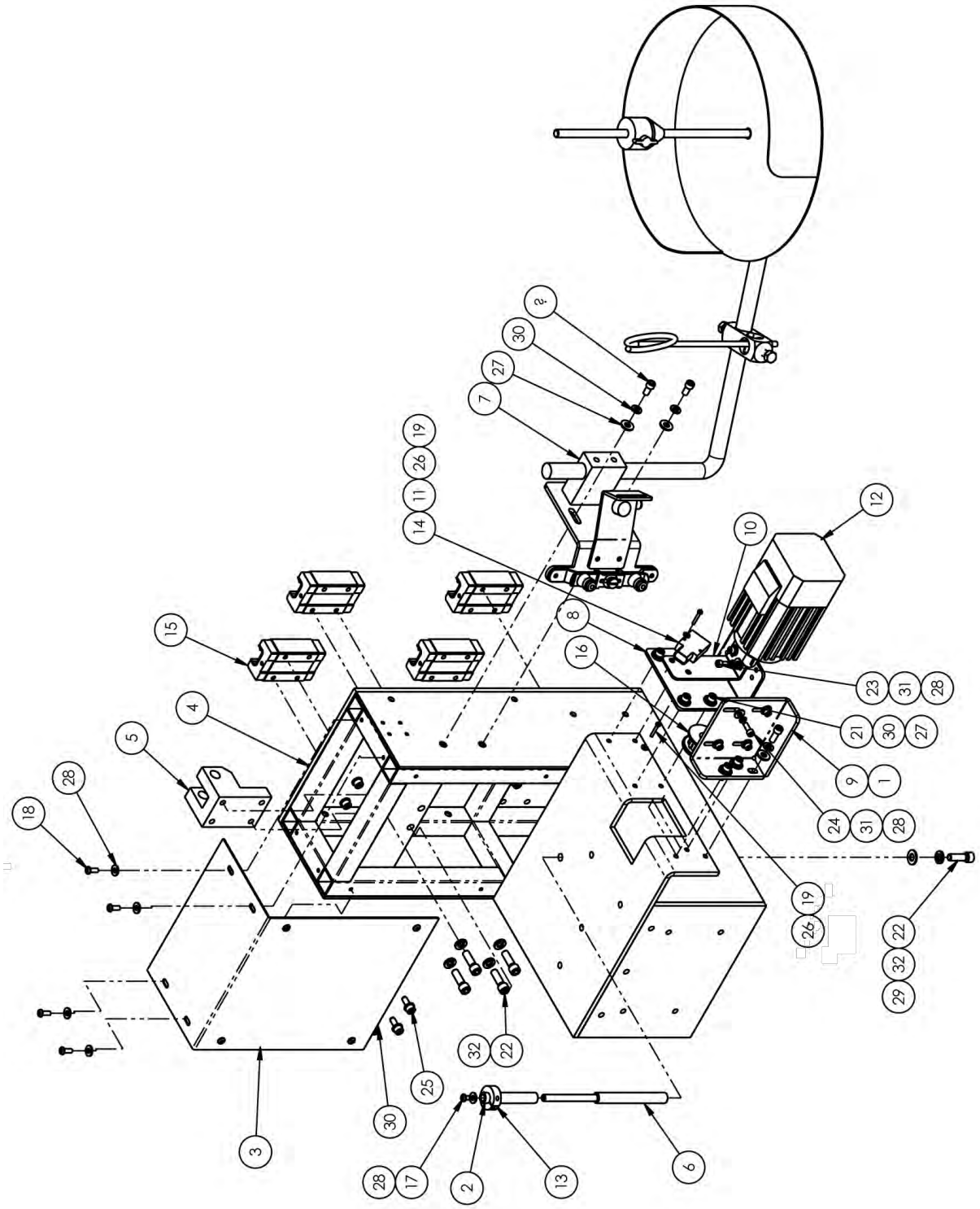
2
30
27
7
19
26
11
14
12
10
8
16
15
4
5
28
18
23
31
28
21
30
27
9
1
24
31
28
19
26
22
32
29
32
22
25
30
3
28
17
2
13
6

1349320 Sew Head Mount Assembly

AAC Drawing Number 1349320 Rev 4

NO.	QTY	PART #	DESCRIPTION
1	2	0211-209	PLATE,NUT,10-32@2.25 CTC
2	1	1279-203.0	3" ROLLER
3	1	1349009	PLATE, COVER
4	1	1349010	WELDMENT, MACHINE MTG
5	1	1349012	BLOCK, PIVOT UPPER
6	1	1349081	SUPPORT, BINDER ROLL
7	1	1349395	TAPE ROLL HOLDER ASSY
8	1	1349399	MOUNT, SENSOR, CBL TRAK
9	1	13453608	BRKT, MOTOR MOUNT
10	1	13453610	BRKT, EYE
11	1	1975-412A	PLATE,NUT,4-40,.95CTC
12	1	4059-DC1500A	MOTOR & CONTROLLER ONLY
13	1	CCCL8F	CLAMP COLLAR- 1/2
14	1	FFSM312LVQ	EYE,ELECTRIC,10-30VDC
15	4	MMAGH25CAN	LINEAR BEARING
16	1	PP10LF050M3	PULLEY,GEAR,3/8P,10T,14MM
17	5	SSBC98016	10-32 X 1/4 BUTTON CAP SC
18	4	SSBC98032	10-32 X 1/2 BUTTON CAP SC
19	2	SSPS70048	4-40 X 3/4 PAN HD SLOTTED
20	2	SSSC01032	1/4-20X1/2 SOC CAP
21	7	SSSC01040	1/4-20 X 5/8" SOC CAP SC
22	5	SSSC10064	5/16-18X1 SOCKET CAP
23	2	SSSC98024	10-32 X 3/8 SOC CAP
24	4	SSSC98032	10-32X1/2, SOC CAP
25	16	SSSCM6X16	M6X16 SOC CAP SCREW
26	2	WWF4	WASHER, FLAT, #4
27	9	WWFS1/4	WASHER,FLAT,SAE,1/4
28	12	WWFS10	WASHER, FLAT, #10, SAE
29	1	WWFS5/16	WASHER,FLAT,SAE,5/16
30	25	WWL1/4	WASHER,LOCK,1/4
31	6	WWL10	WASHER,LOCK,#10,S/S
32	5	WWL5/16	WASHER, LOCK, 5/16

Page 82

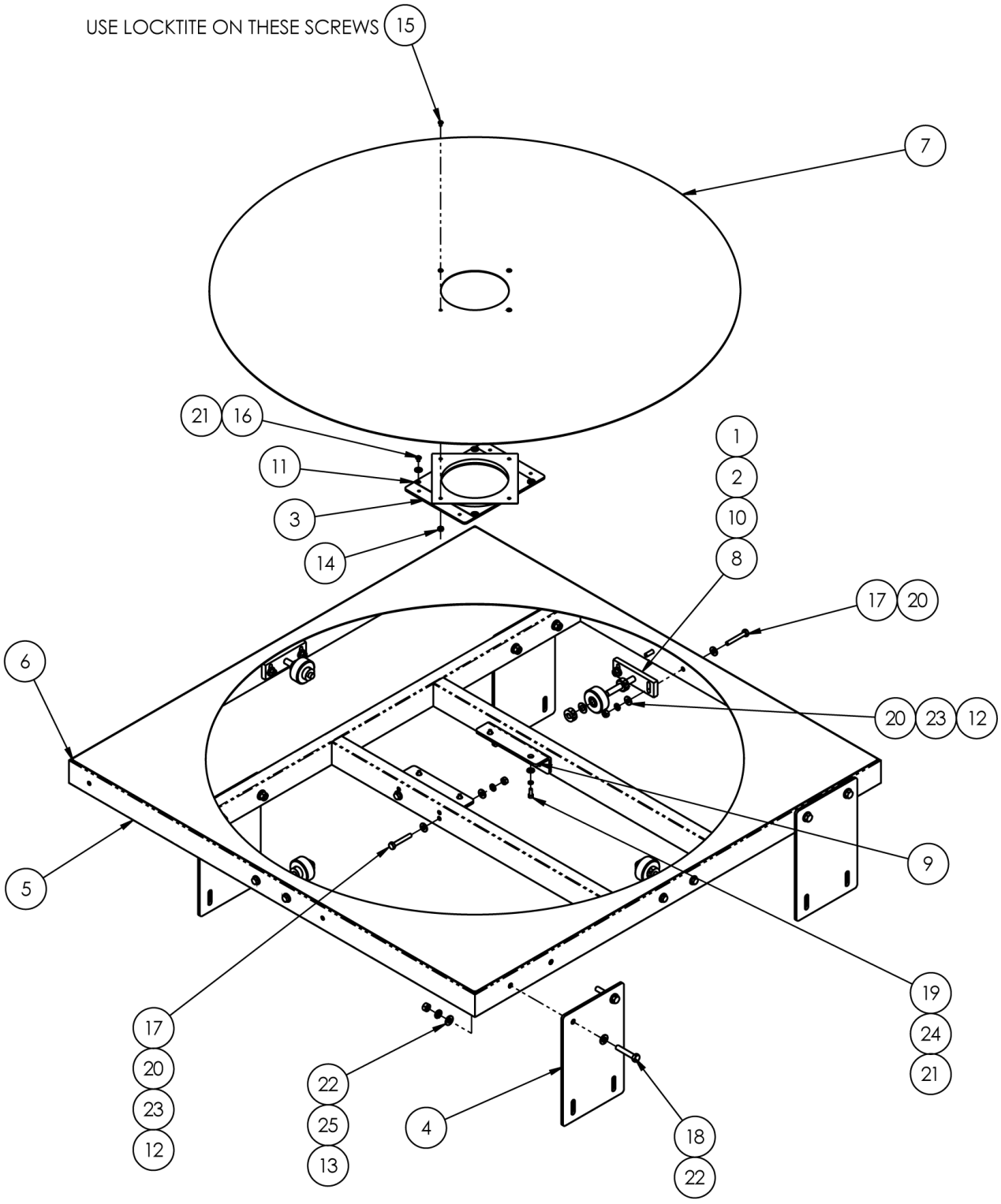
USE LOCKTITE ON THESE SCREWS
15
7
21
16
11
3
14
1
2
10
8
17
20
6
20
23
12
9
5
19
24
21
17
20
23
12
22
25
13
4
18
22

1349340 Rewind Table Assembly

AAC Drawing Number 1349340 Rev 0

NO.	QTY	PART #	DESCRIPTION
1	8	3517	WASHER,THRUST,BRONZE
2	4	1349240	ROLLER,URETHANE,BUSHED
3	1	1349311	PLATE, TURNTABLE MOUNT
4	4	1349316	BRACKET, TABLE MOUNT
5	1	1349344	WELDMENT, REWIND FRAME
6	1	1349348	PLATE, REWIND TABLE
7	1	1349349	DISC, REWIND
8	4	1349362	MOUNT, TURNTABLE IDLER
9	2	1349376	ANGLE, BRG PLATE MOUNT
10	8	CCCL6F	CLAMP COLLAR- 3/8
11	1	MM6031K43	TURNTABLE
12	6	NNH1/4-20	1/4-20 HEX NUT
13	6	SSHC01112	1/4-20 X 1-3/4 HEX HEAD
14	12	WWFS1/4	WASHER FLAT, 1/4
15	6	WWL1/4	1/4 LW
NS	168	ZZZSH-310	TAPE, DOUBLE SIDED
17	8	WWFS10	WASHER, FLAT, #10, SAE
18	4	WWL10	WASHER,LOCK,#10,S/S
19	4	SSSC98032	10-32X1/2, SOC CAP
20	8	SSHC10112	SCREW,HEX,5/16-18X1-3/4
21	16	WWFS5/16	WASHER,FLAT,SAE,5/16
22	8	NNH5/16-18	5/16-18 HEX NUT
23	8	WWL5/16	WASHER, LOCK, 5/16
24	12	WWFS1/4	WASHER,FLAT,SAE,1/4
25	6	SSHC01112	HEX HEAD BOLT 1/4-20X1.75
26	6	WWL1/4	WASHER,LOCK,1/4
27	6	NNH1/4-20	NUT,HEX,1/4-20
28	4	SSBC90016	8-32 X 1/4 BUTTON CAP
29	4	SSBC98016	10-32 X 1/4 BUTTON CAP SC
30	4	NNK8-32	NUT,KEP,8-32

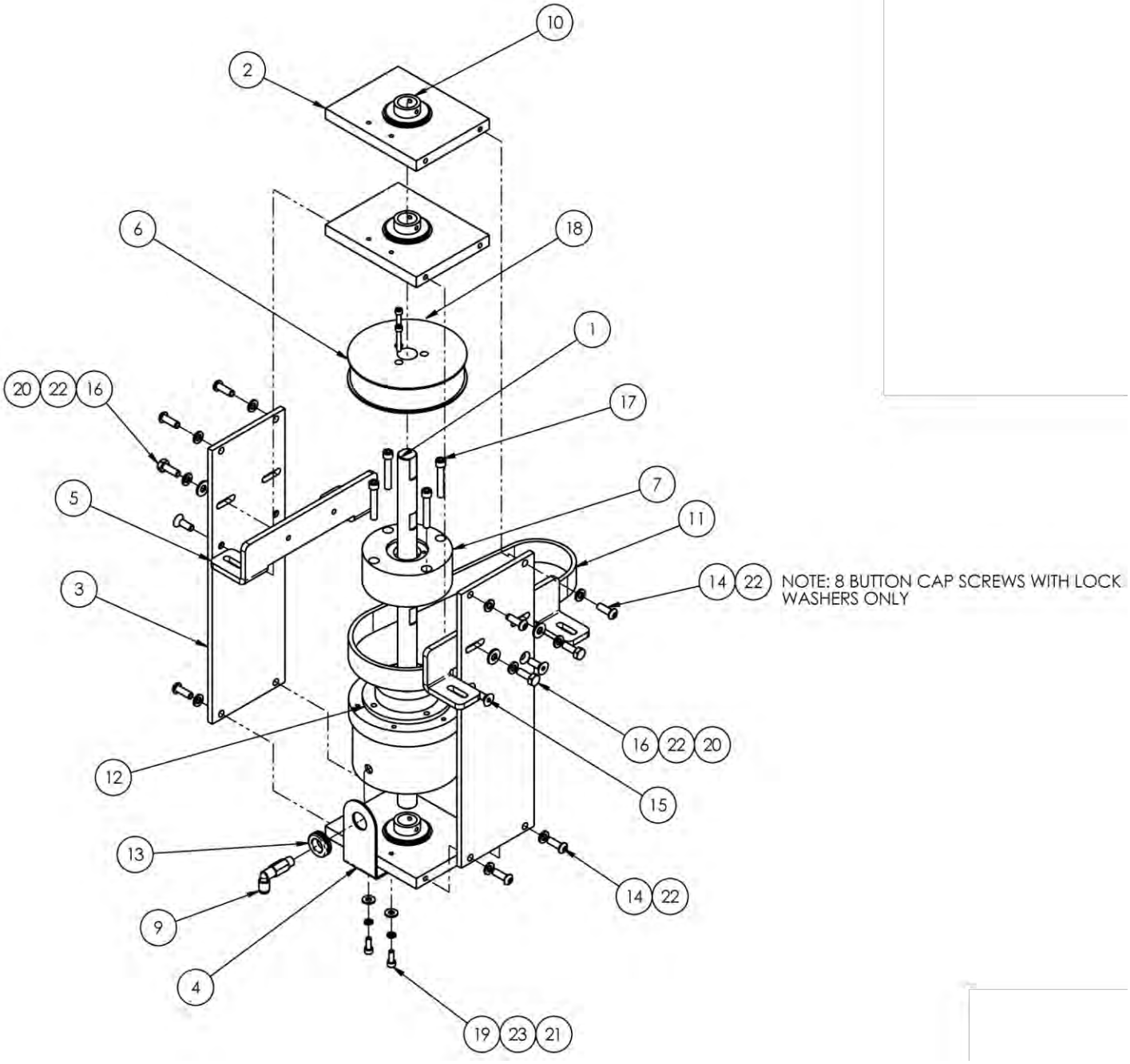
10
2
6
18
1
20 22 16
17
5
7
11
3
14 22
NOTE: 8 BUTTON CAP SCREWS WITH LOCK WASHERS ONLY
16 22 20
12
15
13
14 22
9
4
19 23 21

1349355 Rewind Clutch Assembly

AAC Drawing Number 1349355 Rev 4

NO.	QTY	PART #	DESCRIPTION
1	1	1349346	SHAFT, AIR CLUTCH, MM8028
2	3	1349351	BLOCK, BEARING MOUNT
3	2	1349352	PLATE, CLUTCH MOUNTING
4	1	1349353	SUPPORT, AIR CLUTCH
5	2	1349354	MOUNT, CLUTCH PLATE
6	1	1349432	PULLEY,GEAR,AT10P,36T
7	1	1961-321	PLATE, ADAPTOR, AIR CLUTC
8	1	AA2000F-03	FLOW CONTROL,INLINE,5/32
9	1	AAQMEL-5-8	QUICK MALE ELBOW,LONG
10	3	BBS8703-88	BEARING,BALL,.75IDX1.75OD
11	1	GG25AT10/660BFX	BELT,AT10P,25MM,660MM LG
12	1	MM802860	CLUTCH,AIR,3/4 BORE,4.5"D
13	1	MM9600K21	GROMMET,RUBBER,9/16 ID
14	8	SSBC01048	1/4-20 X 3/4 BUT HEAD
15	4	SSFC01048	1/4-20 X 3/4 FLAT ALLEN
16	4	SSHC01048	1/4-20 X 3/4 HEX HEAD
17	4	SSSC01096	1/4-20 X 1-1/2 SOC CAP
18	3	SSSC90064	#8-32 X 1 SOC CAP
19	2	SSSC98032	#10-32 X 1/2 SOC CAP
20	4	WWFS1/4	WASHER FLAT, 1/4
21	2	WWFS10	WASHER, FLAT #10
22	12	WWL1/4	1/4 LW
23	2	WWL10	#10 LW

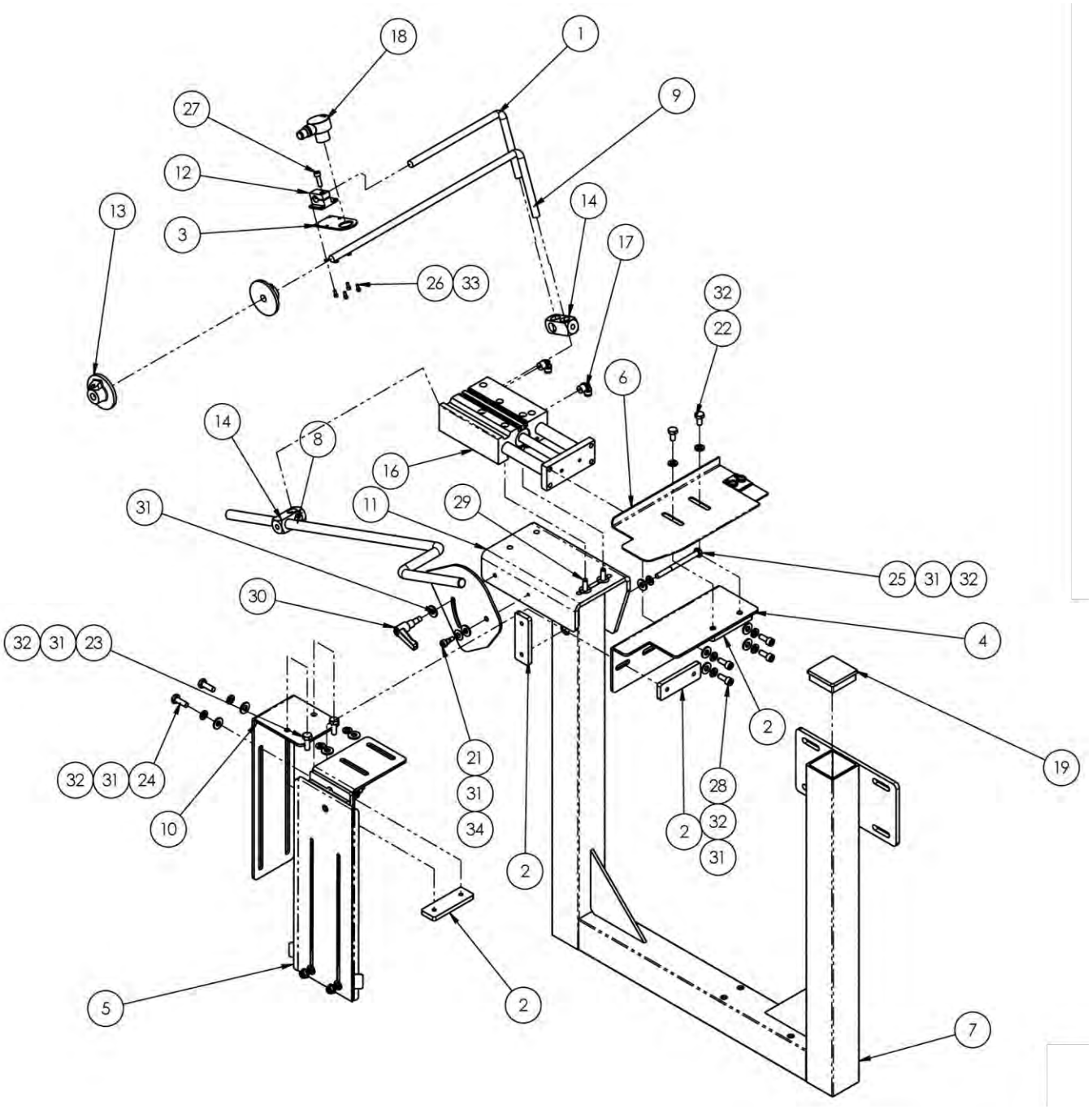
18
1
27
9
12
13
3
14
17
26
33
32
22
6
14
8
16
31
11
29
25
31
32
30
4
32
31
23
2
19
21
31
34
28
32
31
2
32
31
24
10
2
2
5
7

1349370 Flange/Fold Blade Assembly

AAC Drawing Number 1349370 Rev 5

NO.	QTY	PART #	DESCRIPTION
1	1	1335-316	ROD, SS, "L", 3/8, 4.0 X
2	4	1335M-131	PLATE, NUT, 1/4-20 @ 2.0
3	1	1349016	BRACKET, SENSOR
4	1	1349141	MOUNT, FOLD BLADE
5	1	1349228	GUIDE, ASSY., FLANGE
6	1	1349296	FOLDER TONGUE ASSEMBLY
7	1	1349380	WELDMENT, FLANGE GUIDE MT
8	1	1349502	MOUNT, SENSOR, FLNG ROD
9	1	1349505	ROD, SS, "L", 3/8, 4 X 14
10	1	1349507	BRKT, FLANGE GUIDE MT.
11	1	1349523	MNTING PLATE, CYLINDER
12	1	23132A	HOLDER, EYE
13	2	A-4-024	ALUMINUM HUB
14	2	A-U	ROD CROSS BLOCK
NS	2	AA2000F-03	FLOW CONTROL
16	1	AACMGPM2575	CYLINDER,AIR,DUAL ROD
17	2	AAQME-M4-8	QUICK MALE ELBOW
18	1	FFT18FF25Q	EYE,FIXED FIELD, 1IN
19	1	MM132-2X2A	END CAP, SQUARE, BLACK
20	1	NNJ10-24	NUT,JAM,THIN #10-24
21	1	SSAS016016	1/4 X 1/4 X 10-24 SHLD, BOLT
22	2	SSHC01032	1/4-20 X 1/2 HHCS
23	2	SSHC01048	1/4-20 X 3/4 HEX HEAD
24	2	SSHC01048	1/4-20 X 3/4 HEX CAP
25	2	SSHC01192	HEX HEAD BOLTS, 1/4-20 X
26	4	SSSC70016	4-40 X 1/4 SOCKET CAP
27	1	SSSC98040	#10-32 X 5/8 SOC CAP
28	4	SSSCM6X16	M6X16 SOC CAP SCREW
29	2	SSSCM6X20	SCREW, SOCKET CAP
30	1	TTH32415	HANDLE,THREADED,1/4-20X7/
31	16	WWFS1/4	WASHER,FLAT,SAE,1/4
32	14	WWL1/4	WASHER,LOCK,1/4
33	4	WWL4	WASHER,LOCK,#4
34	1	WWS307-1	WASHER,SPRING,BELVEL

Page 65

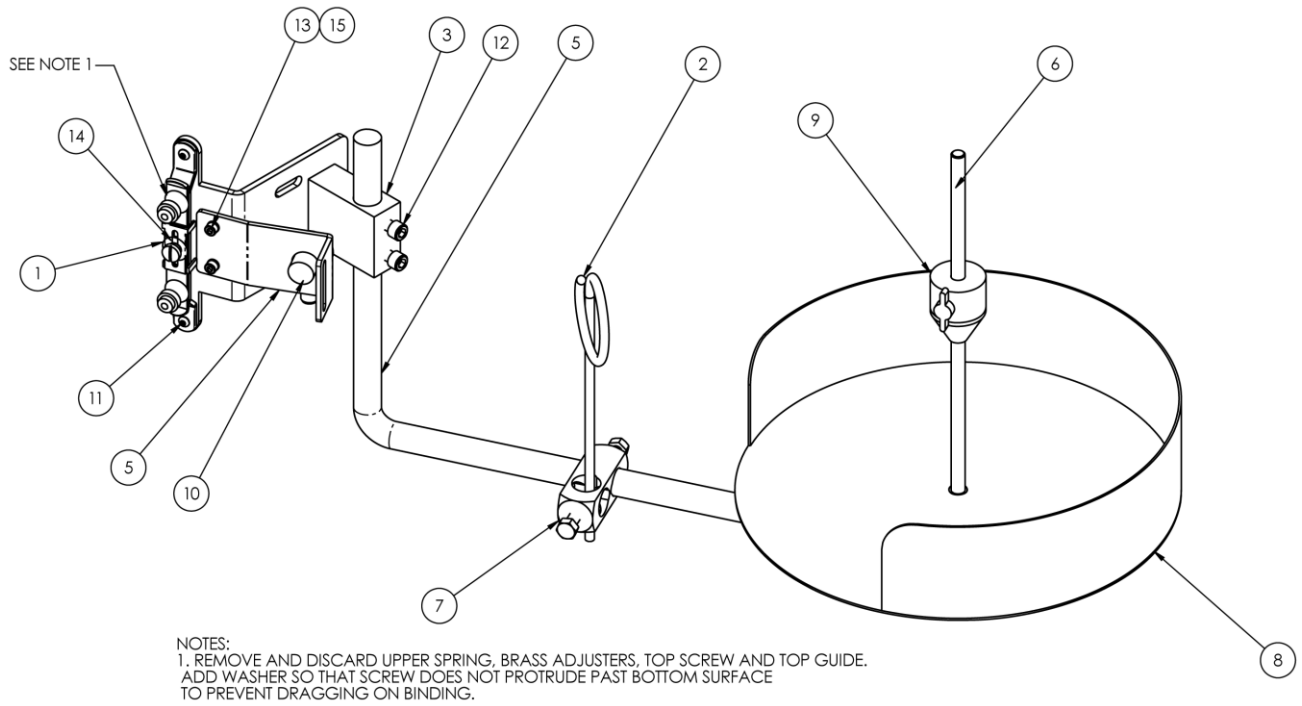

1349395 Tape Roll Holder Assembly

AAC Drawing Number 1349395 Rev 3

NO.	QTY	PART #	DESCRIPTION
1	1	1000	TABLE TOP TENSION
2	1	1347116	RING,TAPE GUIDE
3	1	1349396	MOUNT, TAPE SPOOL
5	1	1349398	BRKT, SENSOR, BINDER MATL
5	1	1959-035	ROD, BENT, 90 DEG
6	1	1981-607	ROD, STRAIGHT, CRS
7	2	28201	BLOCK,CROSS,(LARGE)
8	1	785-A9-12B	STATIONARY CRS DISC WITH
9	1	787-2A-024	CONE BEARING ASSY.
10	1	FFT18FF25Q	EYE,FIXED FIELD, 1IN
11	2	SSBC90024	#8-32 X 3/8 BUT HEAD
12	2	SSSC10040	5/16-18 X 5/8 SOC CAP
13	2	SSSC98032	#10-32 X 1/2 SOC CAP
14	1	WWFS10	WASHER, FLAT #10
15	2	WWL10	#10 LW

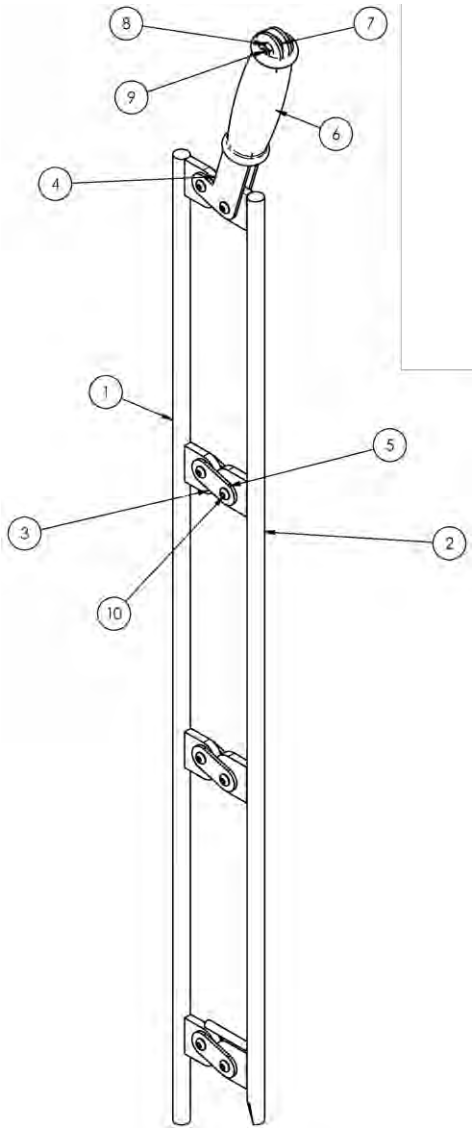

1349438 Rewind Spindle Assembly

AAC Drawing Number 1349438 Rev 1

NO.	QTY	PART #	DESCRIPTION
1	1	1349436	SPINDLE RAIL, LEFT
2	1	1349437	SPINDLE RAIL, RIGHT
3	6	1349439	LINK, CONNECTING
4	2	1349441	HANDLE, SPINDLE
5	8	1349443	BUSHING, S/S, 1/4 DIA
6	1	MMGP-104	GRIP HANDLE-FOAM 3/4 ID

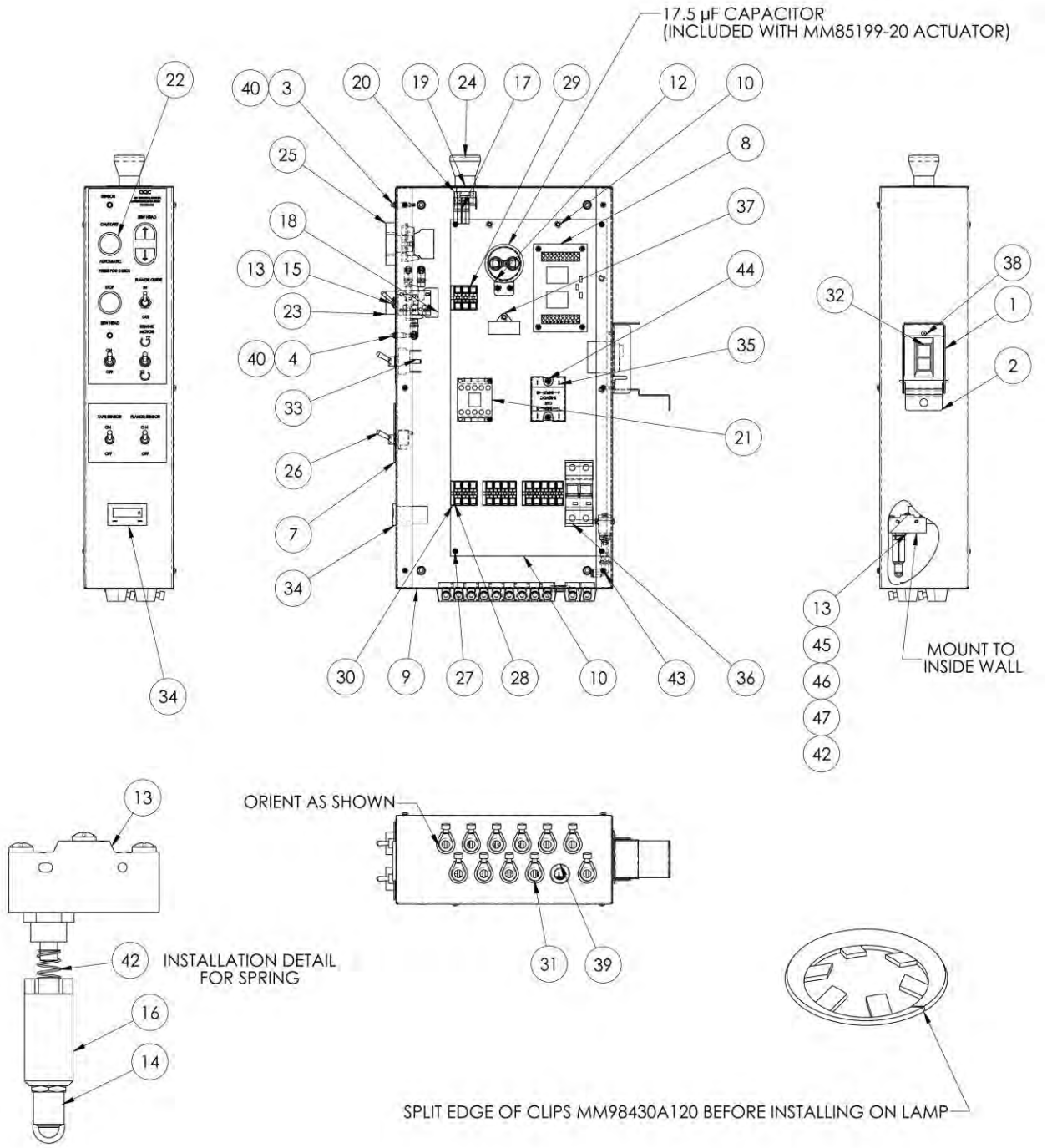
17.5 µF CAPACITOR
(INCLUDED WITH MM85199-20 ACTUATOR)
MOUNT TO
INSIDE WALL
ORIENT AS SHOWN
INSTALLATION DETAIL
FOR SPRING
SPLIT EDGE OF CLIPS MM98430A120 BEFORE INSTALLING ON LAMP

1349400 Control Box Assembly

AAC Drawing Number 1349400 Rev 4

NO	QTY	PART #	DESCRIPTION
1	1	40-322	BOTTOM, AC POWER LOCKOUT
2	1	40-323	TOP, AC POWER LOCKOUT
3	1	0411-1950C	CABLE,LED,YELLOW,24VDC
4	1	0411-1950D	LED,RED,24VDC
5	AR	1349B-WD	DIAGRAM,WIRING
6	1	1349CAB	CABLE PACKAGE
7	1	1349LAB1	LABEL, DRAWING 1349
8	1	4000D-02	PC BOARD, RELAY
9	1	1349401	BOX, CONTROL
10	1	1349402	PANEL, CONTROL BOX
11	1	1349403	COVER, ELECTRICAL PANEL
12	1	13459004	MOUNTING BRACKET, CAPACIT
13	1	AAFES-1	SWITCH
14	4	AAQME-5-8	QUICK MALE ELBOW
15	1	AAV41V	VALVE,TOGGLE
16	1	AAV341A	HUMPHREY VALVE
17	2	EE3X01	BLOCK,P.B. CONTACT, N.C.
18	5	EE3X10	BLOCK,P.B. CONTACT, N.O.
19	1	EE15Y	PLATE, LEGEND, YELLOW
20	4	EEA3L	LATCH,PUSH BUTTON
21	1	EECA491024	CONTACTOR, MINI, 240V
22	1	EEPF3	BUTTON, PUSH 22MM, GREEN MO
23	1	EEPF4	BUTTON, PUSH 22MM, RED
24	1	EEPMTS44	E-STOP BUTTON, TWIST REL.
25	1	EEPU2A3	BUTTON, PUSH 22MM, 2X,G MOM FLUSH
26	2	FF23F385	SWITCH,TOGGLE,SOL
27	8	FF67F4078	SPACER,THREADED 3/8 L
28	12	FF264-341	TERMBLK,WAGO,TOP,DUAL,GRY
29	3	FF264-347	TERMBLK,WAGO,TOP,DUAL,GRN
30	4	FF264-371	TERMBLK,WAGO,TOP,END
31	11	FF1724	STRAIN RELIEF
32	1	FF3120L420A	CIRCUIT BREAKER, THERMAL
33	2	FF34576Q	SW, TOGGLE DPDT 20A
34	1	FF79998861	HOUR METER, 8 DIGIT LCD
35	1	FFD2425F	RELAY,SSR,24VAC,25A
36	1	FFL722C	BREAKER, CIRCT. THERM-MAG
37	1	FFRAV781BW	MODULE, TVS, 240 VAC
38	2	MM4X641	1/8" RIVET ALUM
39	1	MM9600K21	GROMMET,RUBBER,9/16 ID
40	2	MM98430A120	EXT SELF-LOCKING RET RING
41	2	NNH6-32	NUT,HEX,6-32
42	1	RRLC022D-00	SPRING,COMP,.022X.030X.37
43	20	SSPP80016	#6-32X1/4 PAN PHILLIPS
44	4	SSPP80020	#6-32X5/16 PAN PHILLIPS
45	2	SSPS80064	#6-32 X 1 PAN HD SLOTTED
46	2	WWFS6	WASHER, FLAT, #6
47	2	WWL6	WASHER,LOCK,#6

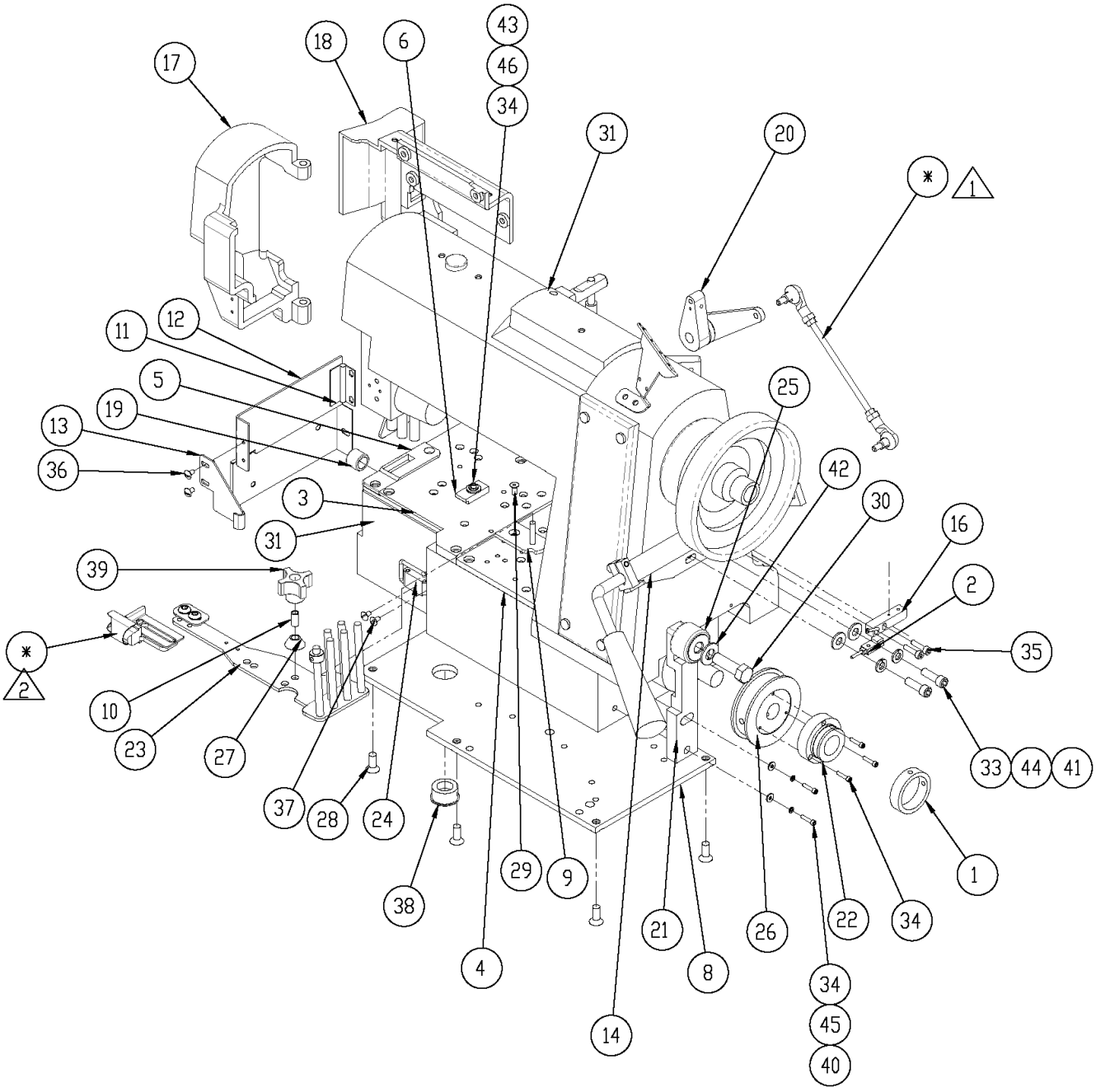
43
46
34
18
6
17
31
20
*
1
11
12
5
19
13
36
25
42
30
3
31
16
39
2
*
2
35
10
23
27
37
28
24
33
44
41
38
29
9
1
21
26
22
34
4
8
34
45
40
14

1349410 Sew Head Assembly

AAC Drawing Number 1349410 Rev 6

NO.	QTY	PART#	DESCRIPTION	NO.	QTY	PART#	DESCRIPTION
1	1	311-129	SLEEVE, TAPE MOUNT	24	1	MM1590A13	LATCH, DRAW PULL
2	1	1278-7055B	PROX. SWITCH W/ PLUG	25	1	MMCYR114S	FOLLOWER, CAM
3	1	1345-002	PLATE. BED, LEFT MOD	26	1	PP20LB050M2	PULLEY,GEAR,3/8P,.63B,20T
4	1	1345-002A	PLATE, BED, RIGHT	27	1	RRBEEHIVEH	SPRING,HEAVY BEEHIVE
5	1	1345-003	MOD. THROAT PLATE	28	6	SSFC01040	1/4-20 X 5/8 FLAT ALN CAP
6	1	1345-004	BLOCK, STOP FOR	29	1	SSFC90024	8-32 X 3/8 FL ALN CAP
7	1	1345-005	SEWING HEAD,MOD	30	1	SSHC25080	3/8-16 X 1-1/4 HEX CAP
8	1	1345-007	PLATE,BOTTOM	31	1	SSIN-300UX6	SEWING HEAD, 300UX6
9	1	1345-009A	SPACER,1/8X1X1.8L	32	1	SSPS50024	2-56 X 3/16 PAN HD SC
10	1	1345-009B	SLEEVE,.25D X.19ID	33	2	SSSC01048	1/4-20 X 3/4" SOC CAP SC
11	1	1345-011	PLATE, END COVER	34	6	SSSC70032	4-40 X 1/2 SOCKET CAP
12	1	1345-012	THREAD ACCESS DOOR	35	2	SSSCM4X16	SCREW,SOCKET CAP
13	1	1345-014	LATCH, SNAP HOOK	36	2	SSTS80016	#6-32 X 1/4 TRUSS HD
14	1	1345-500	FOOTLIFT PIVOT LINK	37	2	SSTS85016	#6-40 X 1/4 TRUSS HD
15	-	1345-500INS	INSTRUCTIONS, FOOT	38	1	TA2351004-R0	RUBBER PLUG
16	1	1345-505	BLOCK, FOOT UP	39	1	TTCL1APPK1	PLASTIC KNOB, #10-32
17	1	160505B	COVER,END, MOD.	40	2	WWF4	WASHER, FLAT, #4
18	1	160506B	BACK COVER, UX5 MOD.	41	2	WWFS1/4	WASHER,FLAT,SAE,1/4
19	1	268071	BEARING,NEEDLE LFT	42	1	WWFS3/8	WASHER,FLAT,SAE,3/8
20	AR	1345243	FOOTLIFT LEVER	43	1	WWFS10	WASHER, FLAT, #10, SAE
21	1	13453066	MOUNT,BELT TENSION	44	2	WWL1/4	WASHER,LOCK,1/4
22	1	13453646	TAPE MOUNT, PULLEY	45	2	WWL4	WASHER,LOCK,#4
23	1	F221-T004	SWING OUT MNT	46	1	WWL10	WASHER,LOCK,#10

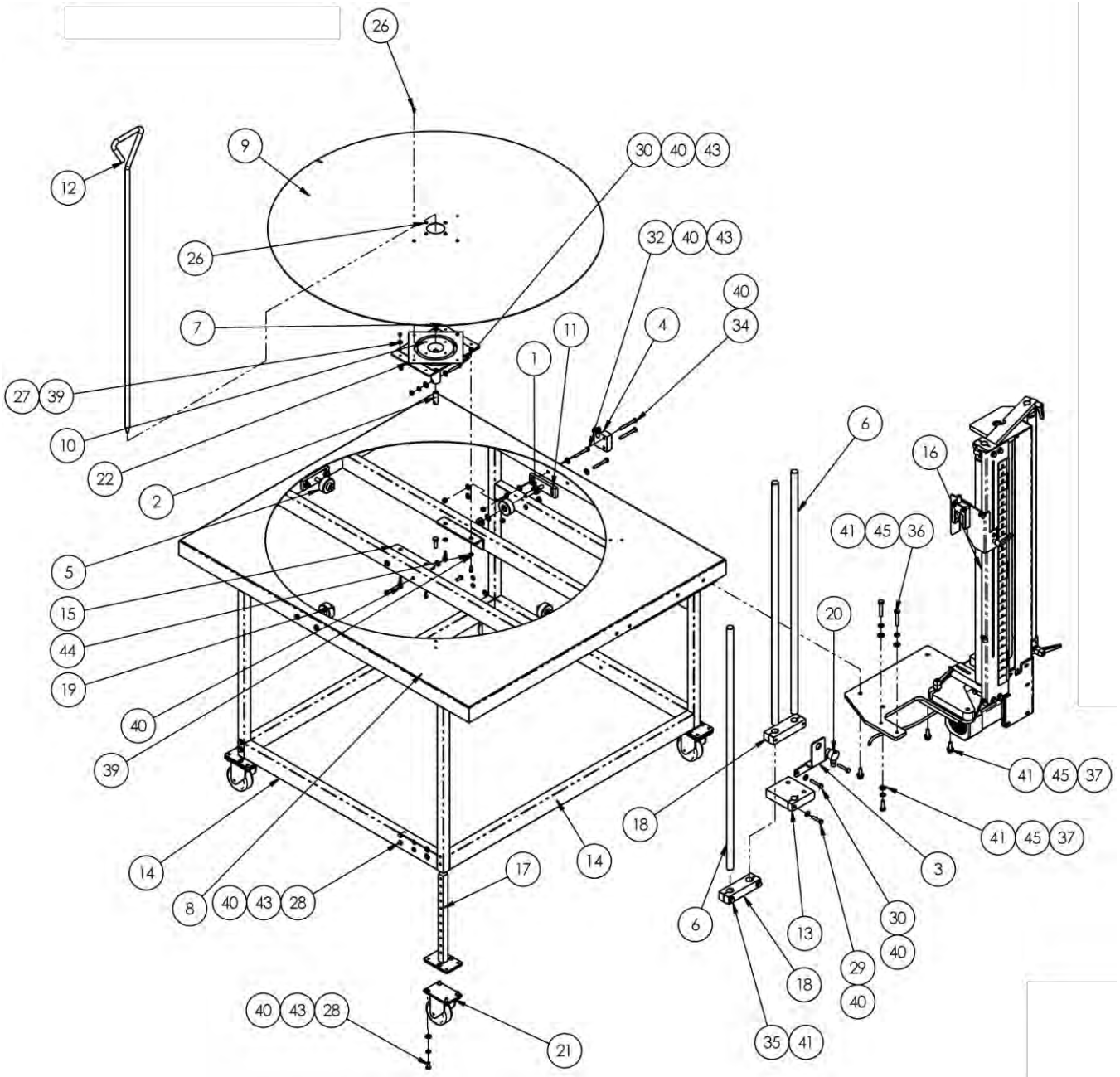
26
9
30 40 43
12
26
32 40 43
40
7
11
4
34
1
27 39
10
22
2
6
16
41 45 36
5
15
44
19
20
40
39
41 45 37
18
41 45 37
14
17
14
3
8
40 43 28
6
13
30
40
29
40
18
40 43 28
35 41
21

1349455 Infeed Table Assembly

AAC Drawing Number 1349455 Rev 2

NO.	QTY	PART #	DESCRIPTION
1	8	3517	WASHER,THRUST,BRONZE
2	1	1349067	ROD STOP
3	1	1349091	SENSOR BRACKET
4	1	1349120	FLANGE BLOCK ASSY.
5	4	1349240	ROLLER,URETHANE,BUSHED
6	3	1349307	ROD,SS,3/4 X 32.5L
7	1	1349311	PLATE, TURNTABLE MOUNT
8	1	1349315	TOP, INFEED TABLE BTM
9	1	1349317	TOP, INFEED TABLE RND
10	1	1349319	WELDMENT, CENTER BLOCK
11	4	1349362	MOUNT, TURNTABLE IDLER
12	1	1349369	ROD, MATL. AXLE, SS 1/2 O
13	1	1349371	CLAMP, 3/4 ROD
14	1	1349374	TABLE ASSY, INFEED
15	2	1349376	ANGLE, BRG PLATE MOUNT
16	1	1349480	ASSY, TENSIONLESS UNWIND
17	4	1961-115	LEG WELDMENT
18	2	1962-3201	CLAMP, 3/4 ROD, 3" CTC
19	8	CCCL6F	CLAMP COLLAR- 3/8
20	1	FFT18FF100Q	EYE,FIXED FIELD, 4IN
21	4	MM427-3RB	CASTER,SWIVEL,3"RUBBER
22	1	MM6031K43	TURNTABLE
23	9	NNH1/4-20	NUT,HEX,1/4-20
24	8	NNK1/4-20	NUT,HEX,KEP,1/4-20,W/LOCK
25	4	NNK8-32	NUT,KEP,8-32
26	8	SSBC90016	8-32 X 1/4 BUTTON CAP
27	4	SSBC98016	10-32 X 1/4 BUTTON CAP SC
28	24	SSHC01040	1/4-20 X 5/8 HHCS
29	1	SSHC01080	1/4-20 X 1-1/4 HHCS
30	3	SSHC01096	1/4-20 X 1-1/2 HHCS
31	4	SSHC01112	HEX HEAD BOLT 1/4-20X1.75
32	6	SSHC01128	1/4-20 X 2 HEX CAP
33	2	SSHC01128F	1/4-20 X 2 HEX HEAD FULL THD
34	2	SSHC01144	HEX HEAD BOLTS
35	2	SSHC10096	5/16-18 X 1-1/2 HHCS
36	2	SSHC10112	SCREW,HEX,5/16-18X1-3/4
37	5	SSHC20064	5/16-24 X 1 HEX CAP
38	4	SSSC98032	10-32X1/2, SOC CAP
39	8	WWF10	WASHER, FLAT, #10, COM
40	57	WWFS1/4	WASHER,FLAT,SAE,1/4
41	8	WWFS5/16	WASHER,FLAT,SAE,5/16
42	1	WWL1/4	1/4 LW
43	32	WWL1/4	WASHER,LOCK,1/4
44	4	WWL10	WASHER,LOCK,#10,S/S
45	6	WWL5/16	WASHER, LOCK, 5/16
NS	216	ZZZSH-310	TAPE, DOUBLE SIDDED

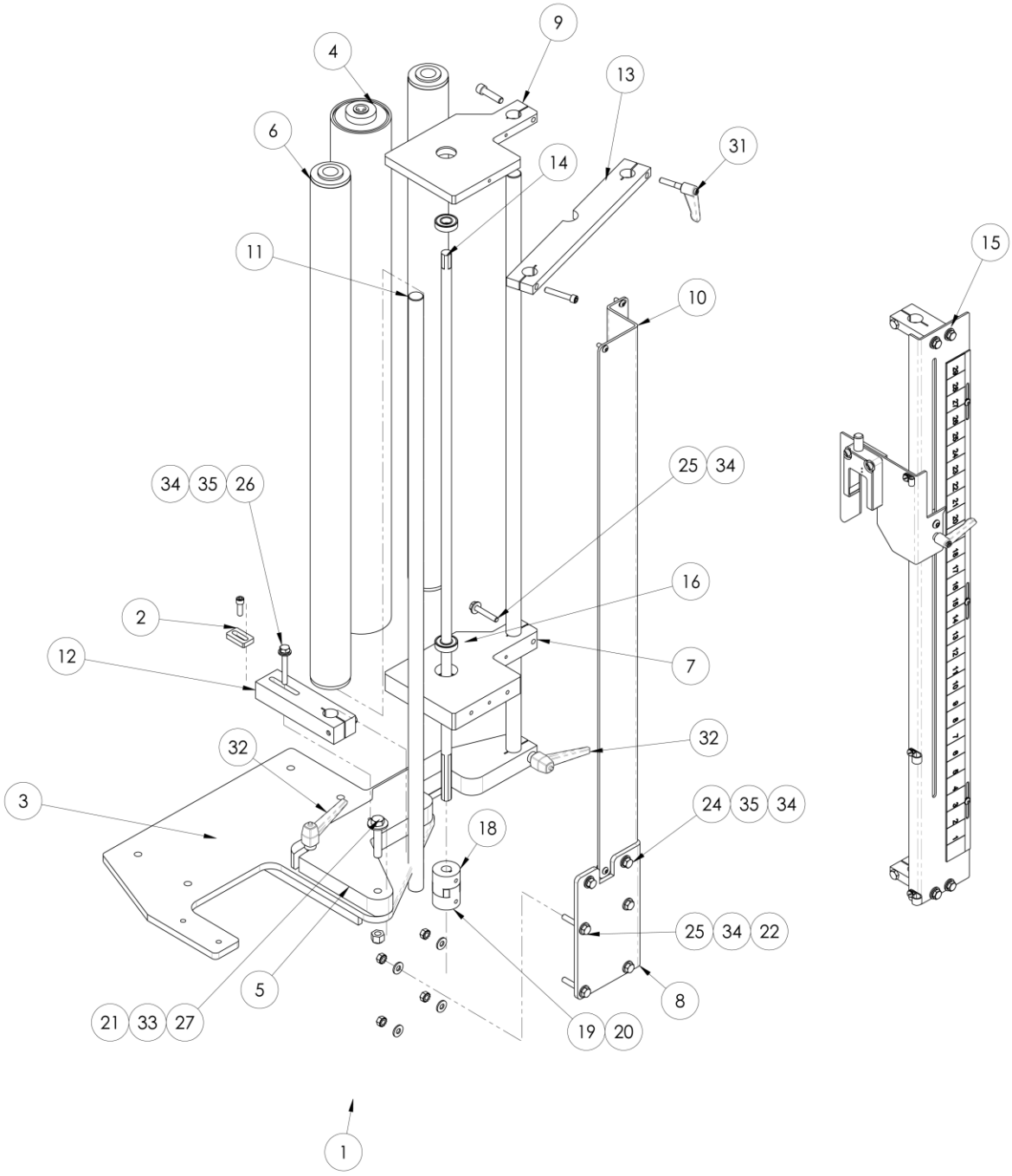
9
4
13
6
31
14
11
15
10
25 34
34 35 26
16
2
7
12
32
32
3
24 35 34
18
25 34 22
5
8
21 33 27
19 20
1

1349480 Tensionless Unwind Assembly

AAC Drawing Number 1349480 Rev 5

NO	QTY	PART #	DESCRIPTION
1	1	23218DM	MOTOR ASSY,GEAR
2	1	1349205	BLOCK, STOP
3	1	1349208	MOUNT,GUIDE ROD PIVOT
4	1	1349389	ASSY, ROLL 30" PULLER
5	1	1349456	ARM, GUIDE ROD PIVOT
6	2	1349458	ROLL, ASSY. 2"ODX24 ALUM
7	1	1349461	BASE, TENSIONLESS UNWIND
8	1	1349462	MOUNT, MOTOR T.UNWINDER
9	1	1349468	BASE, TENSIONLESS UNWIND
10	1	1349471	GUARD, OPER.TEN.UNWNDER
11	2	1349473	ROD,SS,3/4 X 35.625L
12	1	1349474	CLAMP, 3/4 ROD
13	1	1349475	CLAMP, 3/4 RODS 9.65"CTC
14	1	1349478	SHAFT, TENSIONLESS UNWNDR
15	1	1349514	EDGE GUIDE ASBLY, FRONT
16	2	BB1L005	BEARING,BALL,.500D
NS	-	FF81F4591	FASTON, PIGGY BACK, 1/4"
18	1	MM6408K12-1/2	COUPLING,FLEX #2 1/2 BORE
19	1	MM6408K12-3/4	COUPLING,FLEX #2 3/4 BORE
20	1	MM6408K73	SPIDER, BUNA FOR #2 HUB
21	1	NNE3/8-16	NUT, ELASTIC 3/8-16
22	4	NNK1/4-20	KEP NUT, 1/4-20
23	4	SSBC98032	#10-32 X 1/2 BUT HEAD
24	3	SSHC01040	1/4-20 X 5/8 HEX HEAD
25	6	SSHC01096	1/4-20 X 1-1/2 HEX HEAD
26	1	SSHC01128F	1/4-20 X 2 HEX HEAD FULL THD
27	1	SSHC25128	3/8-16 X 2 HEX HEAD
28	1	SSSC01048	1/4-20 X 3/4 SOC CAP
29	1	SSSC01096	1/4-20 X 1-1/2 SOC CAP
30	1	SSSC10080	5/16-18 X 1-1/4 SOC CAP
31	1	TTH32416	HANDLE,THRD,1/4-20X1-1/8
32	2	TTH32426	HANDLE,THRD,5/16-18X1-1/4
33	1	WWF3/8	3/8 FW
34	14	WWFS1/4	WASHER FLAT, 1/4
35	4	WWL1/4	1/4 LW

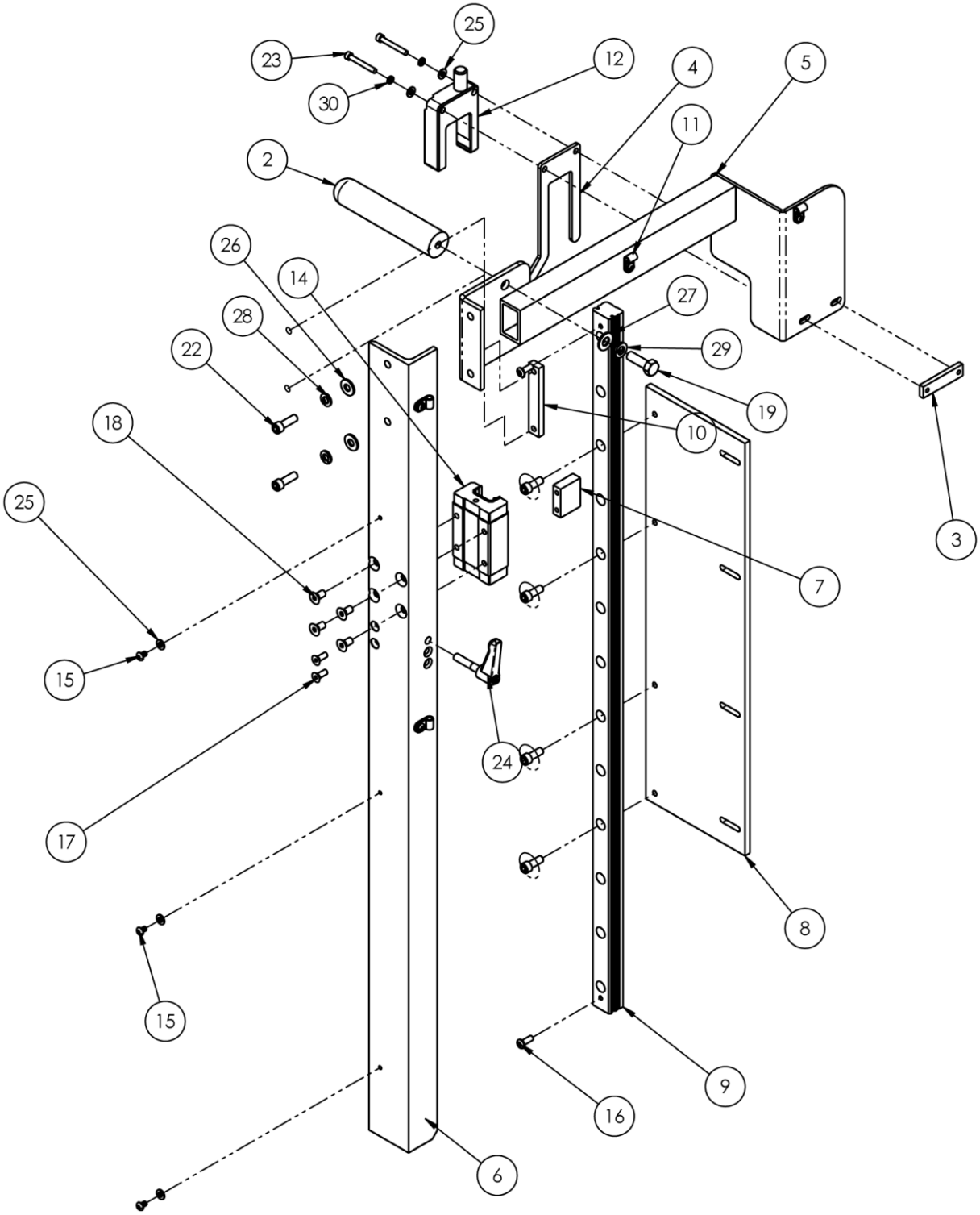
25
23
30
12
4
5
11
2
26
14
28
22
27
29
19
10
18
25
3
7
15
24
17
8
15
9
16
6

1349495 Rear Edge Sensor Assembly

AAC Drawing Number 1349495 Rev 6

NO.	QTY	PART #	DESCRIPTION
1	1	1349083	MOUNT, SCALE
2	1	1349158	HANDLE, 1349 GAUGE
3	1	1349249	PLATE,NUT,10-32,2 PL
4	1	1349479	GUIDE, MATL , OFFSET
5	1	1349490	ASSY, SENSOR MOUNT REAR
6	1	1349491	MOUNT, ASBLY, ADJ SCALE
7	1	1349497	MOUNT, LOCKING HANDLE
8	1	1349516	MOUNT, SENSOR SCALE
9	1	1349524	RAIL,MODIFIED
10	1	84-2006	PLATE,NUT,1/4-20@2.50 CTC
11	4	AAF3/16	CLAMP, BLACK PLASTIC
12	1	FFSL30VB6VA	SLOT SENSOR W/4 PIN MOLEX
13	1	MM1910A23M	RULER,SILVER MYLAR 36"
14	1	MMAGH25CAN	LINEAR BEARING
15	3	SSBC90016	8-32 X 1/4 BUTTON CAP
16	2	SSBC98032	10-32 X 1/2 BUTTON CAP SC
17	2	SSFC98032	10-32 X 1/2 FLAT ALLEN CAP
18	4	SSFCM6X12	SCREW,FLAT ALLEN CAP
19	1	SSHC10064	5/16-18 X 1 HHCS
20	4	SSPS90024	#8-32 X 3/8 LG PAN HD
21	4	SSSC01040	1/4-20 X 5/8" SOC CAP SC
22	2	SSSC01048	1/4-20 X 3/4" SOC CAP SC
23	2	SSSC90080	#8-32 X 1-1/4 SOC CAP SC
24	1	TTH32416	HANDLE,THRD,1/4-20X1-1/8
25	5	WWF8	WASHER, FLAT, #8
26	2	WWFS1/4	WASHER,FLAT,SAE,1/4
27	1	WWFS5/16	WASHER,FLAT,SAE,5/16
28	2	WWL1/4	WASHER,LOCK,1/4
29	1	WWL5/16	WASHER, LOCK, 5/16
30	2	WWL8	WASHER,LOCK,#8

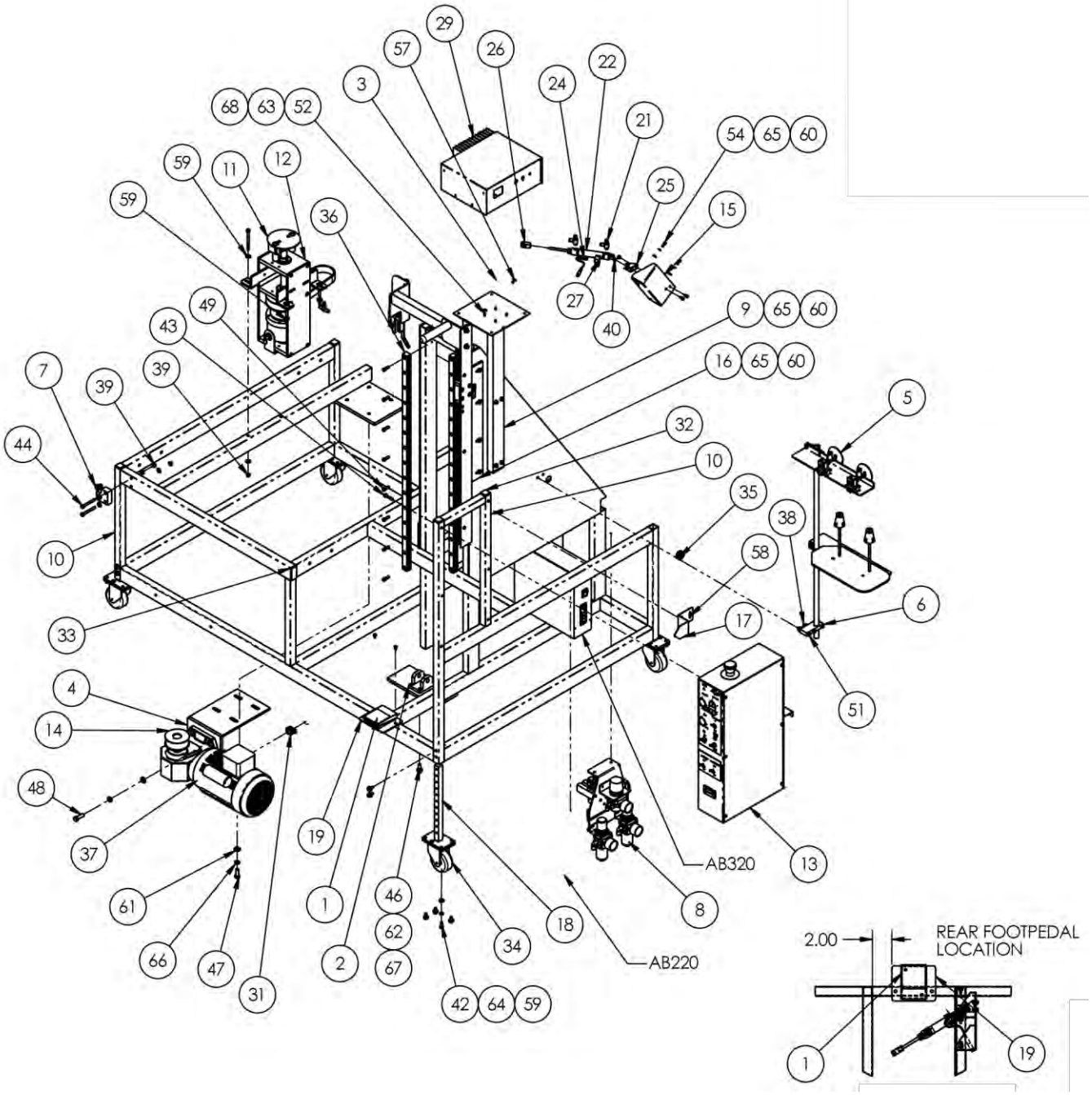
AB320
AB220
2.00
REAR FOOTPEDAL LOCATION

1349500 Main Console Assembly

AAC Drawing Number 1349500 Rev 2

	NO.	QTY	PART #	DESCRIPTION	NO.	QTY	PART #	DESCRIPTION
	1	2	1278-6161	FOOT SWITCH MODIFICATION	35	1	MM9307K65	GROMMET,5/8,1.125,.125GV
	2	1	1349013	MOUNT, LIFT LOWER	36	2	MMAGR25860n	RAIL, LINEAR, AG SERIES
	3	1	1349035	PLATE, COVER	37	1	MMBH2LM22R	MOTOR,GEAR,R/A,220V
	4	1	1349054	WELDMENT, BRACKET	38	2	NNH1/4-20	NUT,HEX,1/4-20
	5	1	1349090	ASSY, THREAD STAND	39	6	NNK1/4-20	NUT,HEX,KEP,1/4-20,W/LOCK
	6	1	1349094	BLOCK, ROD MOUNT	40	2	NNK10-32	KEP NUT, 10-32
	7	1	1349120	FLANGE BLOCK ASSY.	41	2	SSBC90032	8-32X1/2 BUTTON CAP
Page 63	8	1	1349156	ASSY, PNEU. PANEL	42	24	SSHC01040	1/4-20 X 5/8 HHCS
	9	1	1349227	POST, STEPPER BOX MNT	43	4	SSHC01080	1/4-20 X 1-1/4 HHCS
	10	1	1349330	WELDMENT, FRAME	44	2	SSHC01144	HEX HEAD BOLTS
Page 61	11	1	1349345	ASSY, REWIND RECEIVER	45	4	SSHC01192	HEX HEAD BOLTS, 1/4-20 X
Page 79	12	1	1349355	ASSY, REWIND CLUTCH	46	4	SSHC10064	5/16-18 X 1 HHCS
Page 85	13	1	1349400	ASSY, CONTROL BOX	47	4	SSHC25064	3/8-16X1,HEX CAP
	14	1	1349431	PULLEY,GEAR,AT10P,24T	48	4	SSHC25080	3/8-16 X 1-1/4 HEX CAP
	15	1	1349433	BRACKET, CYLINDER MOUNT	49	16	SSSC01048	1/4-20 X 3/4" SOC CAP SC
Page 94	16	1	1349495	ASSY,EDGE SENSOR REAR	50	1	SSSC01064	1/4-20 X 1 SOC CAP
	17	1	1349496	POINTER, TABLE HEIGHT	51	2	SSSC01112	1/4-20 X 1-3/4 SOC CAP
	18	4	1961-115	LEG WELDMENT	52	4	SSSC80032	6-32 X 1/2 SOC CAP SC
	19	2	1961-159	PLATE, MOUNT, FOOT PEDAL	53	2	SSSC98024	10-32 X 3/8 SOC CAP
	NS	1	4080-4508C	CABLE, STEPPER MOTOR	54	2	SSSC98032	10-32X1/2, SOC CAP
	21	2	AA198RA508	FLOW CONTROL,5/32 X 1/8"	55	4	SSSC98048	10-32 X 3/4 SOC CAP
	22	1	AACM042DXP	CYLINDER,AIR,3/4X1/2 STR	56	4	SSSC98096	10-32 X 1-1/2 SOC CAP
	NS	1	AAEC4	CABLE, AAEHSKQ SWITCH	57	14	SSZS93032	SCREW, SHT.METAL 10 ZIP
	24	1	AAEHSKQ	SWITCH,HALL EFFECT BIMBA	58	2	WWF8	WASHER, FLAT, #8
	25	1	AAFBP-11C	BRKT,PIVOT,1/4 BORE	59	42	WWFS1/4	WASHER,FLAT,SAE,1/4
	26	1	AAFCT-7	CLEVIS,AIR CYL, 1/4-28	60	10	WWFS10	WASHER, FLAT, #10, SAE
	27	1	AAFD35456-6	BAND,04 CYLINDER,HSKQ	61	8	WWFS3/8	WASHER,FLAT,SAE,3/8
	NS	1	AP-28-612Y	CABLE, STEPPER MOTOR	62	4	WWFS5/16	WASHER,FLAT,SAE,5/16
	29	1	AP-28-800Y3	BOX,STEPPER,H.S. (X5)	63	4	WWFS6	WASHER, FLAT, #6
	NS	1	EE37F3312	CORD, POWER	64	32	WWL1/4	WASHER,LOCK,1/4
	31	1	K-235A	CONNECTOR,ROMEX,3/4"	65	10	WWL10	WASHER,LOCK,#10,S/S
	32	4	MM132-1202	END CAP,SQUARE,BLACK	66	8	WWL3/8	WASHER, LOCK, 3/8
	33	1	MM132-1496	PLUG 1 X 2	67	4	WWL5/16	WASHER, LOCK, 5/16
	34	4	MM427-3RB	CASTER,SWIVEL,3"RUBBER	68	4	WWL6	WASHER,LOCK,#6

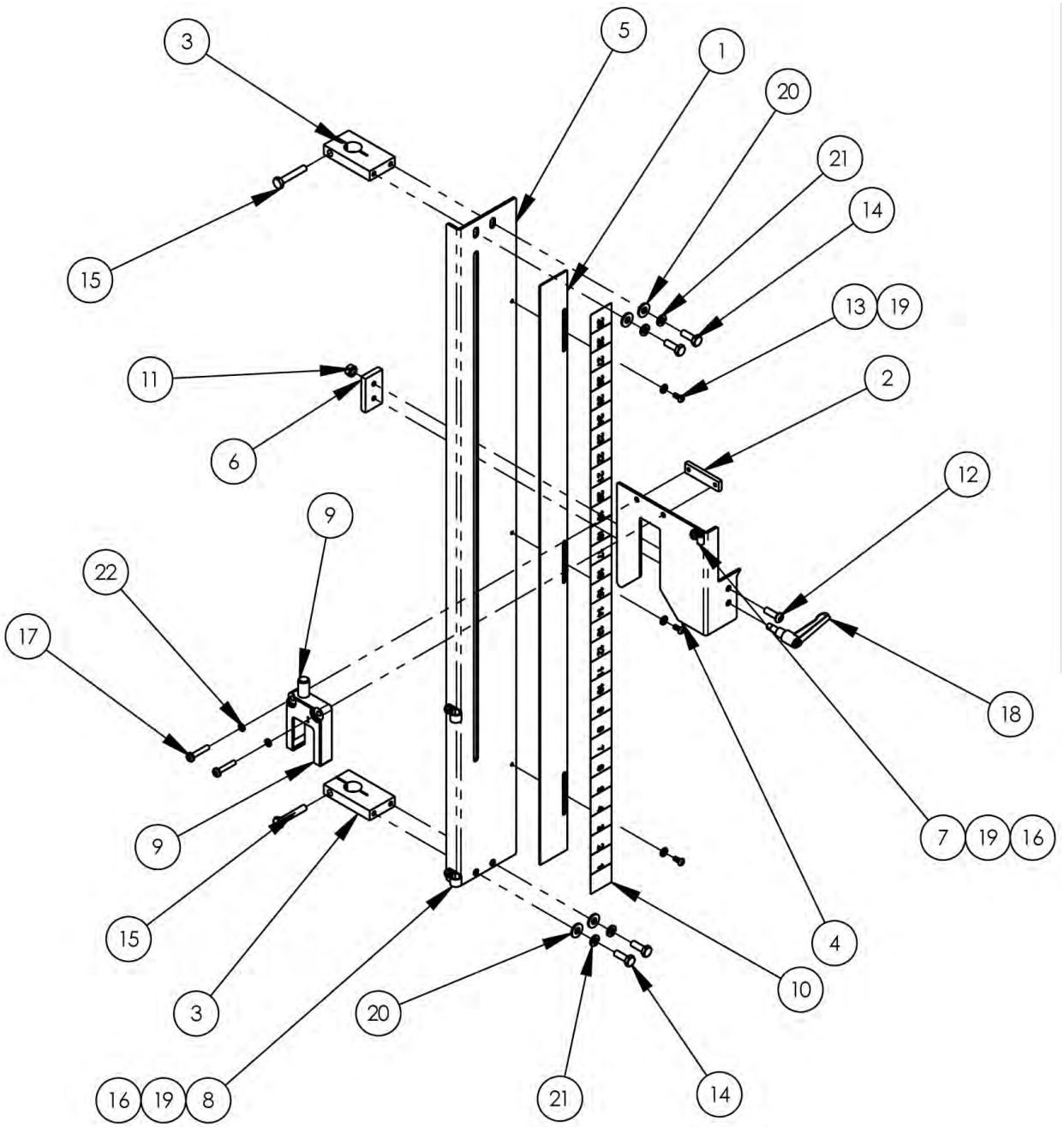
3
5
1
20
21
14
15
13
19
11
2
6
12
9
22
17
18
9
7
19
16
15
4
10
3
20
16
19
8
21
14

1349514 Front Edge Guide Assembly

AAC Drawing Number 1349514 Rev 0

NO.	QTY	PART #	DESCRIPTION
1	1	1349083	MOUNT, SCALE
2	1	1349249	PLATE,NUT,10-32,2 PL
3	2	1349510	CLAMP, 3/4 ROD
4	1	1349511	POINTER, EYE HOLDER
5	1	1349512	MOUNT, SCALE POINTER
6	1	33005319	PLATE,NUT,1/4-20@.75CTC
7	1	AAF3/16	CLAMP, BLACK PLASTIC
8	2	AAF3/8	CLAMP, BLACK PLASTIC
9	1	FFSL30VB6VA	SLOT SENSOR W/4 PIN MOLEX
10	1	MM1910A23M	RULER,SILVER MYLAR 36"
11	1	NNK1/4-20	KEP NUT, 1/4-20
12	1	SSBC01048	SCREW,BUTTON CAP,1/4-20X3/4,SS
13	3	SSBC90020	8-32X3/8 BUTTON CAP
14	4	SSHC01048	1/4-20 X 3/4 HEX CAP
15	2	SSHC01096	1/4-20 X 1-1/2 HHCS
16	3	SSPS90024	#8-32 X 3/8 LG PAN HD
17	2	SSPS98064	#10-32X1 PAN HD SLTD
18	1	TTH32415	HANDLE,THREADED,1/4-20X7/
19	6	WWF8	WASHER, FLAT, #8
20	4	WWFS1/4	WASHER,FLAT,SAE,1/4
21	4	WWL1/4	WASHER,LOCK,1/4
22	2	WWL10	WASHER,LOCK,#10,S/S

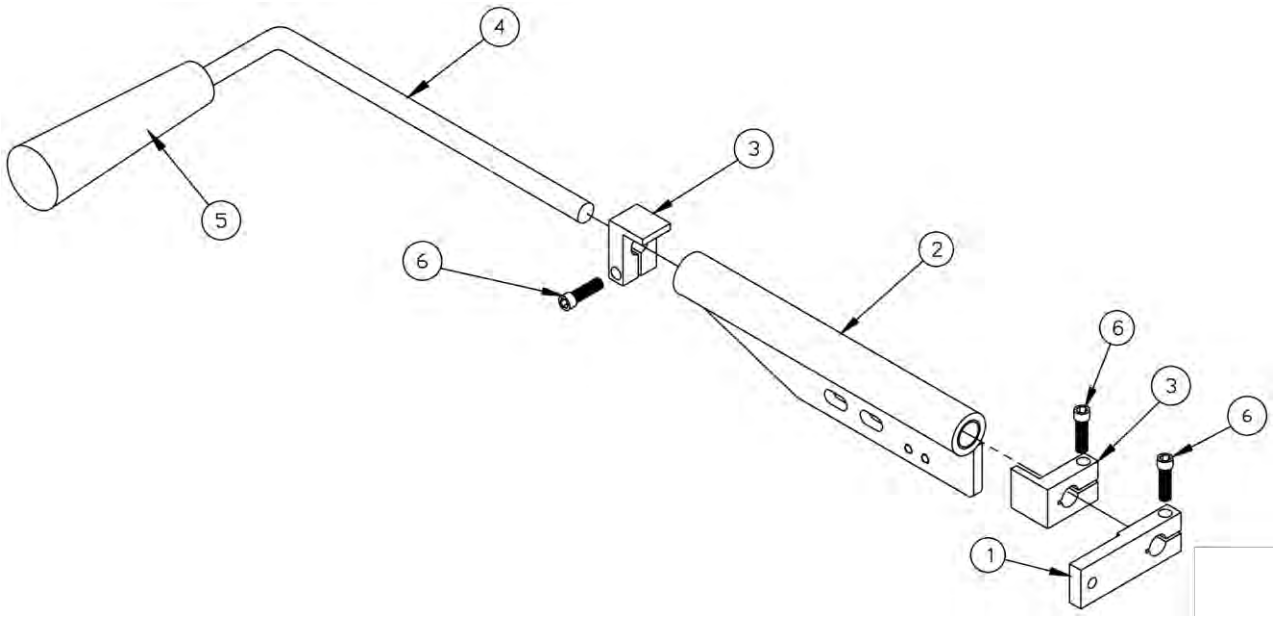

1345-500 Footlift Pivot Link Assembly

AAC Drawing Number 192500B Rev 7

NO.	QTY	PART #	DESCRIPTION
1	1	1349518	Lever, Footlift
2	1	1345-503	Footlift Pivot
3	2	1345077	Clamp, Stop
4	1	1345-504	Pivot Arm
5	1	MMBTH-2	Handle
6	3	SSSC98048	Screw, Socket Cap
7	AR	1345-500INS	Instructions

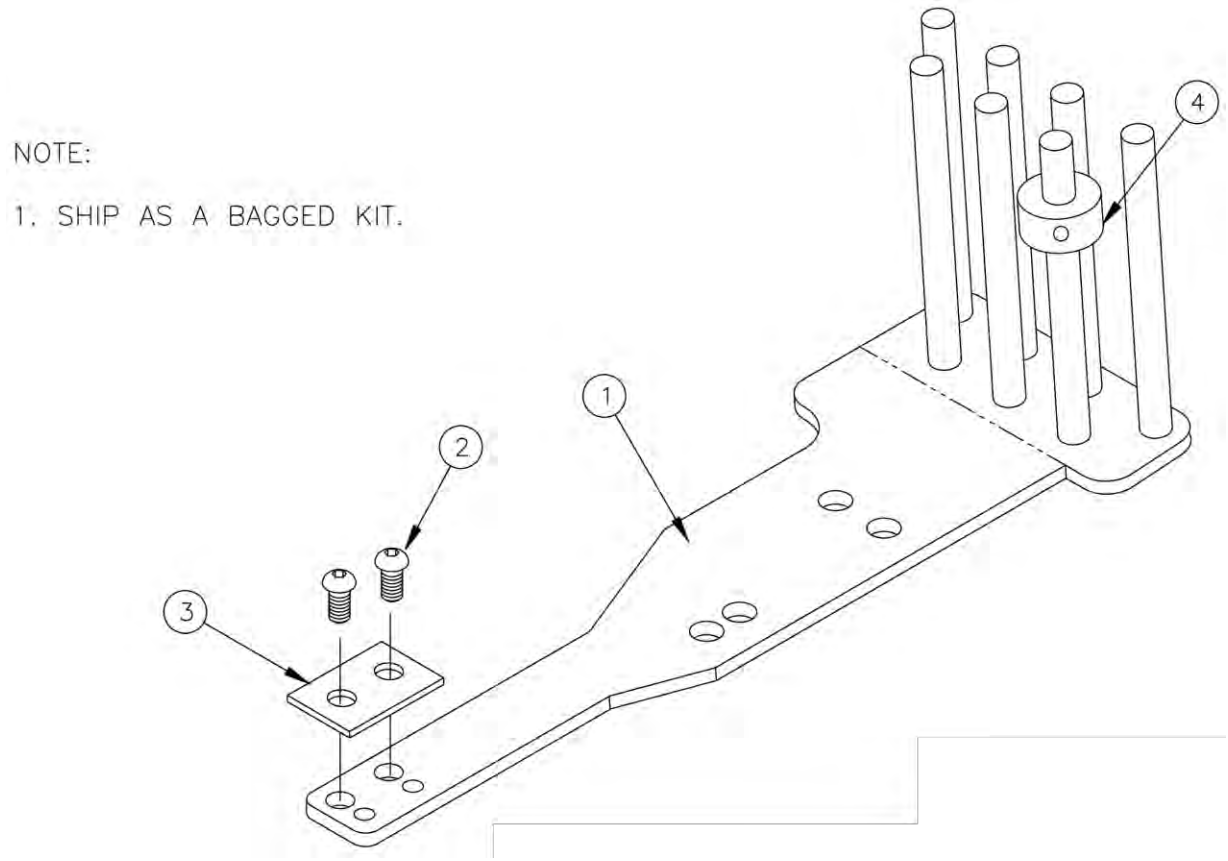

F221-T004 Swing Out Assembly

AAC Drawing Number 102376B Rev 5

NO.	QTY	PART #	DESCRIPTION
1	1	F221-T004A	Swing out Brkt
2	2	SSBC05024	Screw, Button Cap
3	1	WWP032	Plate, Washer
4	1	CCSC41/4	Collar, 1/4 ID

1349B-PD Pneumatic Diagram

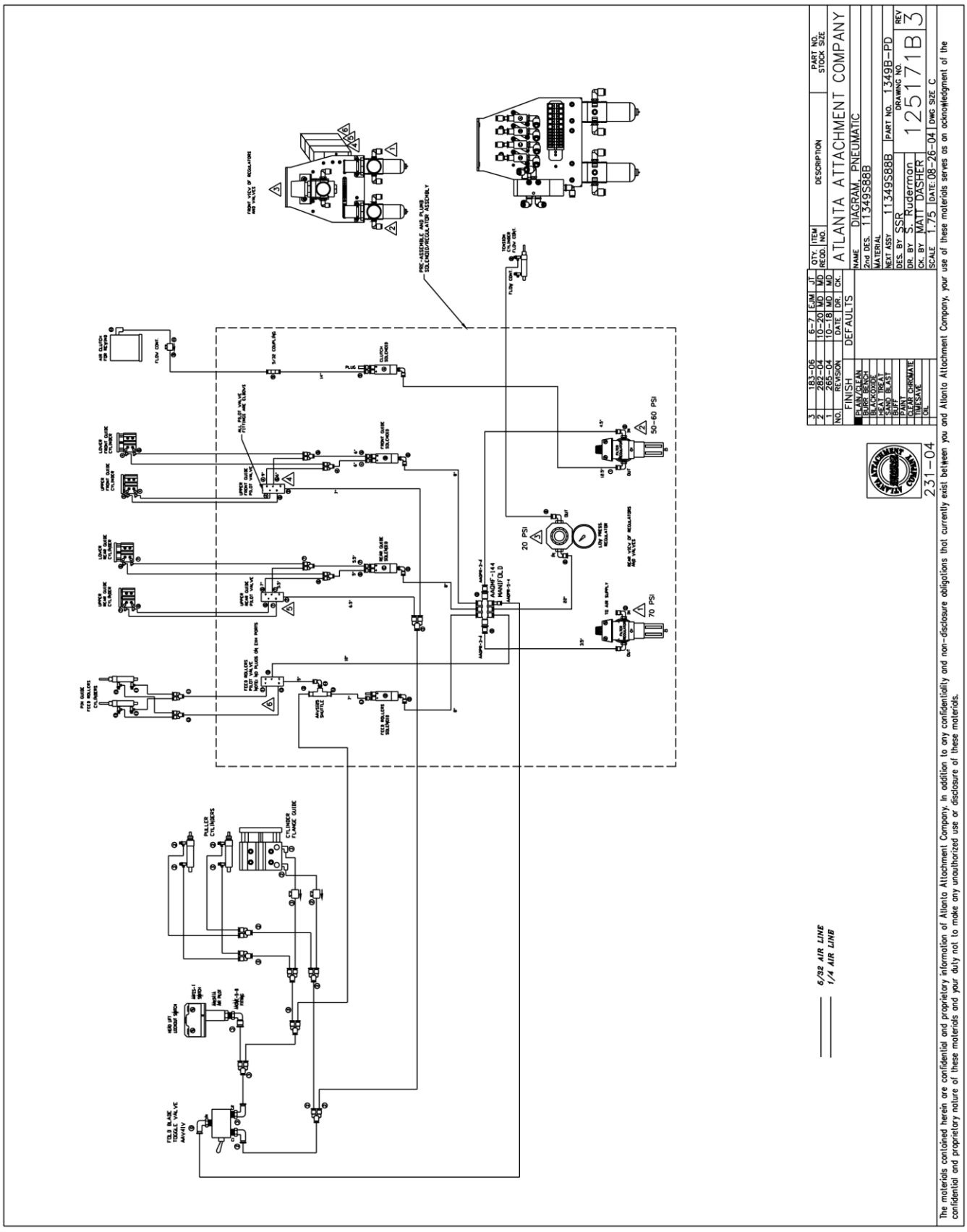

1349B-WD Wiring Diagram

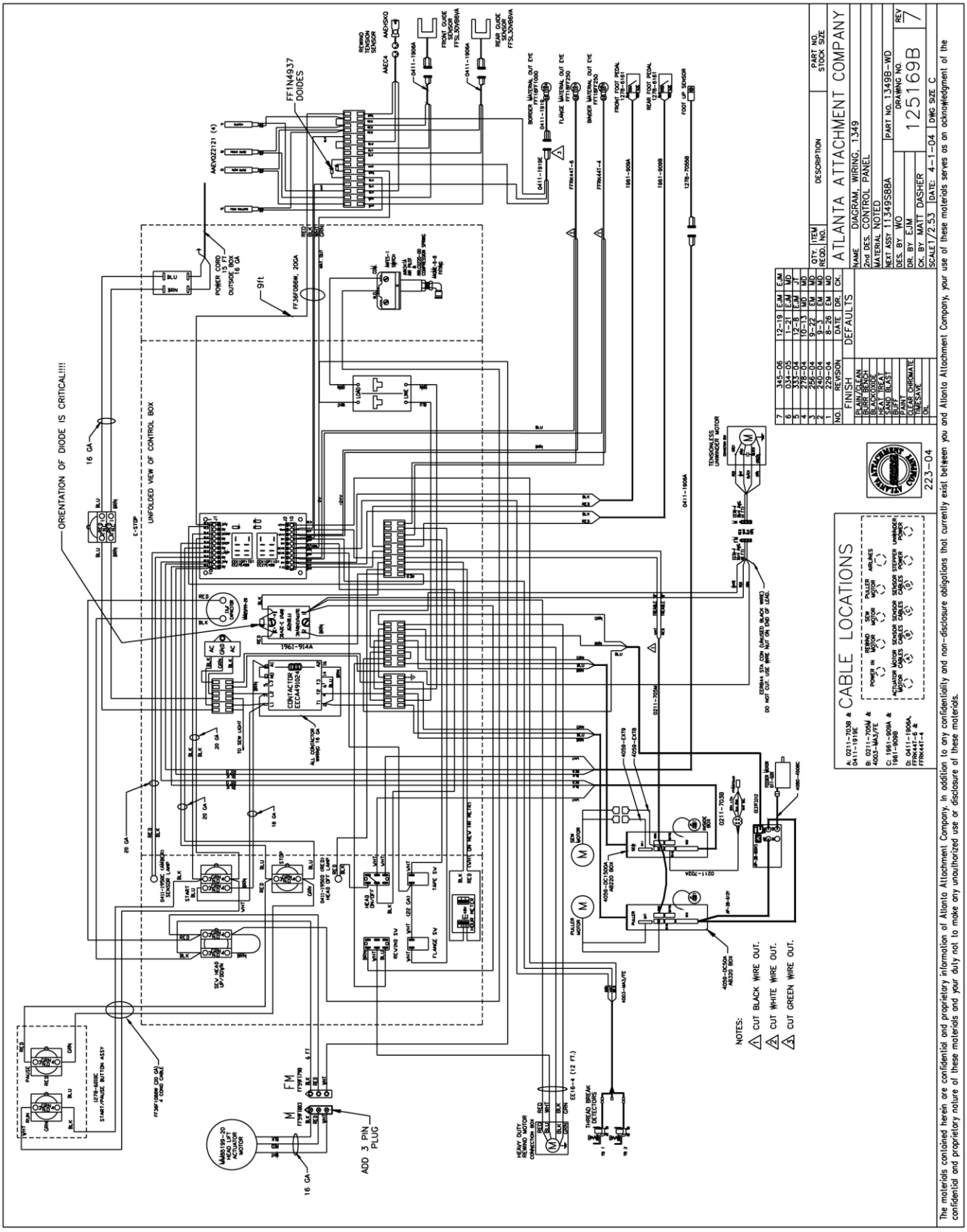

Atlanta Attachment Company (AAC) Statement of Warranty

Manufactured Products

Atlanta Attachment Company warrants manufactured products to be free from defects in material and workmanship for a period of eight hundred (800) hours of operation or one hundred (100) days whichever comes first. Atlanta Attachment Company warrants all electrical components of the Serial Bus System to be free from defects in material or workmanship for a period of thirty six (36) months.

Terms and Conditions:

- AAC Limited Warranty becomes effective on the date of shipment.
- AAC Warranty claims may be made by telephone, letter, fax or e-mail. All verbal claims must be confirmed in writing.
- AAC reserves the right to require the return of all claimed defective parts with a completed warranty claim form.
- AAC will, at its option, repair or replace the defective machine and parts upon return to AAC.
- AAC reserves the right to make the final decision on all warranty coverage questions.
- AAC warranty periods as stated are for eight hundred (800) hours or one hundred (100) days whichever comes first.
- AAC guarantees satisfactory operation of the machines on the basis of generally accepted industry standards, contingent upon proper application, installation and maintenance.
- AAC Limited Warranty may not be changed or modified and is not subject to any other warranty expressed or implied by any other agent, dealer, or distributor unless approved in writing by AAC in advance of any claim being filed.

What Is Covered

- Electrical components that are not included within the Serial Bus System that fail due to defects in material or workmanship, which are manufactured by AAC are covered for a period of eight hundred (800) hours.
- Mechanical parts or components that fail due to defects in material or workmanship, which are manufactured by AAC.
- Purchased items (sewing heads, motors, etc.) will be covered by the manufacturers (OEM) warranty.
- AAC will assist in the procurement and handling of the manufacturers (OEM) claim.

What Is Not Covered

- Parts that fail due to improper usage, lack of proper maintenance, lubrication and/or modification.
- Damages caused by; improper freight handling, accidents, fire and issues resulting from unauthorized service and/or personnel, improper electrical, plumbing connections.
- Normal wear of machine and parts such as Conveyor belts, "O" rings, gauge parts, cutters, needles, etc.
- Machine adjustments related to sewing applications and/or general machine operation.
- Charges for field service.
- Loss of time, potential revenue, and/or profits.
- Personal injury and/or property damage resulting from the operation of this equipment.

Declaración de Garantia

Productos Manufacturados

Atlanta Attachment Company garantiza que los productos de fabricación son libres de defectos de mate-rial y de mano de obra durante un periodo de ochocientos (800) horas de operación o cien (100) días cual llegue primero. Atlanta Attachment Company garantiza que todos los componentes del Serial bus son libres de defectos de material y de mano de obra durante un periodo de treinta y seis (36) meses.

Términos y Condiciones:

- La Garantía Limitada de AAC entra en efecto el día de transporte.
- Reclamos de la Garantía de AAC pueden ser realizados por teléfono, carta, fax o correo electrónico. Todo reclamo verbal tiene que ser confirmado vía escrito.
- AAC reserva el derecho para exigir el retorno de cada pieza defectuosa con un formulario de reclamo de garantía.
- AAC va, según su criterio, reparar o reemplazar las máquinas o piezas defectuosas devueltas para AAC.
- AAC reserva el derecho para tomar la decisión final sobre toda cuestión de garantía.
- Las garantías de AAC tiene una validez de ochocientas (800) horas o cien (100) días cual llega prim-ero.
- AAC garantiza la operación satisfactoria de sus máquinas en base de las normas aceptadas de la industria siempre y cuando se instale use y mantenga de forma apropiada.
- La garantía de AAC no puede ser cambiado o modificado y no está sujeto a cualquier otra garantía implicado por otro agente o distribuidor menos al menos que sea autorizado por AAC antes de cual-quier reclamo.

Lo Que Está Garantizado

- Componentes eléctricos que no están incluidos dentro del sistema Serial Bus que fallen por defectos de materiales o de fabricación que han sido manufacturados por AAC son garantizados por un peri-odo de ochocientas (800) horas.
- Componentes mecánicos que fallen por defectos de materiales o de fabricación que han sido manu-facturados por AAC son garantizados por un periodo de ochocientas (800) horas.
- Componentes comprados (Motores, Cabezales,) son protegidos debajo de la garantía del fabricante.
- AAC asistirá con el manejo de todo reclamo de garantía bajo la garantía del fabricante.

Lo Que No Está Garantizado

- Falla de repuestos al raíz de uso incorrecto, falta de mantenimiento, lubricación o modificación.
- Daños ocurridos a raíz de mal transporte, accidentes, incendios o cualquier daño como resultado de servicio por personas no autorizados o instalaciones incorrectas de conexiones eléctricas o neumáti-cas.
- Desgaste normal de piezas como correas, anillos de goma, cuchillas, agujas, etc.
- Ajustes de la máquina en relación a las aplicaciones de costura y/o la operación en general de la máquina.
- Gastos de Reparaciones fuera de las instalaciones de AAC
- Pérdida de tiempo, ingresos potenciales, y/o ganancias.
- Daños personales y/o daños a la propiedad como resultado de la operación de este equipo.

Atlanta Attachment Company
362 Industrial Park Drive
Lawrenceville, GA 30046
770-963-7369
www.atlatt.com

Printed in the USA