Model **1335M**

Revision 21.2 Updated Jan 7, 2014

Technical Manual & Parts Lists

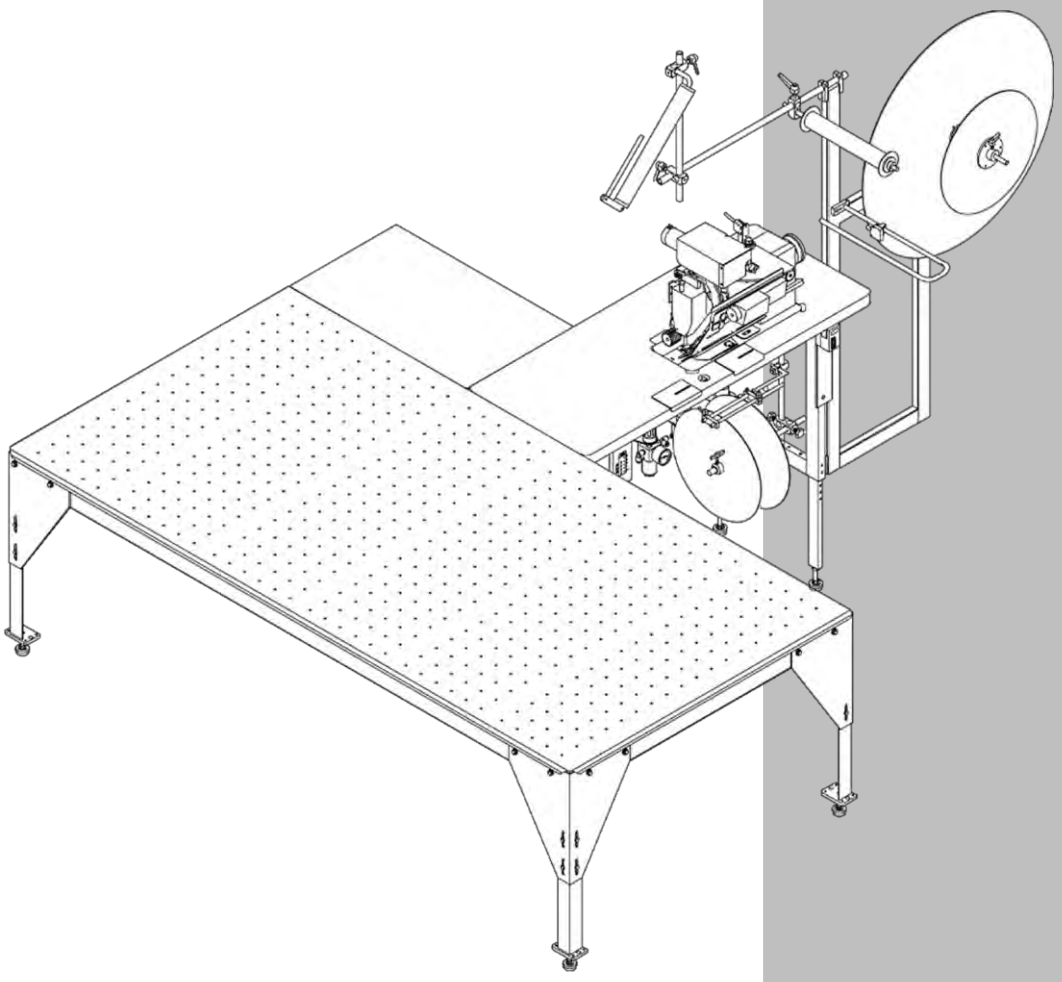

Atlanta Attachment Company

362 Industrial Park Drive

Lawrenceville, GA 30046

770-963-7369 • www.atlatt.com

ATLANTA ATTACHMENT COMPANY, INC.

Confidential and Proprietary Information

The materials contained herein are confidential and proprietary information of Atlanta Attachment Company. In addition to any confidentiality and non-disclosure obligations that currently exist between you and Atlanta Attachment Company, your use of these materials serves as an acknowledgment of the confidential and proprietary nature of these materials and your duty not to make any unauthorized use or disclosure of these materials.

All materials contained herein are additionally protected by United States Copyright law and may not be used, disclosed, reproduced, distributed, published or sold without the express written consent of Atlanta Attachment Company, which consent may be withheld in Atlanta Attachment Company's sole discretion. You may not alter or remove any copyright, trademark or other notice from copies of these materials.

IMPORTANT

It is important to read and understand the information contained within this manual before attempting to operate the machine. Atlanta Attachment Co., Inc. shall not be held liable for damage resulting from misuse of the information presented within, and reserves the right to change the information contained within, without prior notification.

Contents

Important Safety Instruction 1
Liability 2
Safety Equipment on the Machines 3
Protective Eyewear 4
Important Notices 5
Maintenance 7
Repair 8
A Word to the End User 9
Safety Precautions 9
General Machine Data 10

Electrical & Pneumatic Specifications 10
Installation & Setup 10
Control Box Operation 11
Main Control Box: 11
Stepper Control Boxes 12
Efka Control Boxes 12
Basic Machine Operation 13
Loading the Gusset Roll and Unwinder 13
Loading and Adjusting the Folder 13
Adjusting the Edge Guide 13
Sewing the Panel 14
Adjusting the Corner Ruffles 14
Finishing the Panel 14
Efka Control Box Settings 14
General Machine Adjustments 15
Air Pressure 15
Sewing Head 15
Ruffler Drive 15
Puller Drive 15
Unwinder Assembly 15
General Machine Maintenance 16
Daily 16
Weekly 16
Electric Eye Sensor Adjustment 16
Reflective Tape Maintenance 16
11335M Recommended Spare Parts List 16
AAC Part # SP1335M Spare Parts Kit 16
Parameter Settings for Efka Controller 17
1335M Folder Spacer Reference Chart 18
Assembly Drawings & Parts Lists 19
11335M Manual Pillowtop Ruffler, No Flange 20
11335M-SDAT Manual Pillowtop Ruffler 21
11335M-SUAT Manual Pillowtop Ruffler 22
11335MA-SDAT Manual Pillowtop Ruffler 23
11335MA-SUAT Manual Pillowtop Ruffler 24
11337AT Air Table Assembly 25
11335MA Manual Pillowtop Ruffler, with Flange, Flat Ruffle 26

11335MB Manual Pillowtop Ruffler, W/Premade Folded Gusset 27
11335MC Continental Foundation Ruffler, 18”, No Flange 28
11335MC-SDAT Continental Foundation Ruffler, 18” 29
11335MC-SUAT Continental Foundation Ruffler, 18” 30
11335MDA Manual Pillowtop Ruffler 31
11335MDA-SDAT Manual Pillowtop Ruffler 32
11335MDA-SUAT Manual Pillowtop Ruffler 33
11335MDC Continental Foundation Ruffler, 16” 34
11335MDC-SDAT Continental Foundation Ruffler, 16” 35
11335MDC-SUAT Continental Foundation Ruffler, 16” 36
1335M-2300 Pivot Assembly 37
1335MD-G Generic Console 38
11335MDE Euro Top Ruffler, 9” 39
11335MDE-SDAT Euro Top Ruffler, 9” 40
11335MDE-SUAT Euro Top Ruffler, 9” 41
11335ME Euro Top Ruffler, 9” 42
11335ME-SDAT Euro Top Ruffler, 9” 43
11335ME-SUAT Euro Top Ruffler, 9” 44
11335MSA Manual Pillowtop Ruffler, W/ Air table 45
11335M-34 Manual Pillowtop Ruffler, W/ Auto Flanger 46
1335M-G Generic Console 47
1335M-120 Puller Drive Assembly 49
1335M-1000 Stand & Motor Assembly 51
1335M-2000 Ruffler Assembly 53
1335M-2000A Ruffler Assembly 55
1335M-3000A Puller Assembly 57
1335M-5000A Stripper Blade Assembly 58
1335M-6000 Footlift Assembly 59
1335MD-6000 Footlift Assembly 60
1335183 Stripper Blade 61
1335M-9500 Stepper Box Assembly 62
1335M-2100A Ruffler Cylinder Assembly 63
1335M-2200 Ruffler Mounting Angle Assembly 64
1335M-2400 Ball Screw and Nut Assembly 65
A-2216D 1/2 Book Folder, 1/2 “Capacity 66
A-2216K5/16 Flat Folder W/ Flange, 5/16 x 6” Capacity 67
A-2216L5/16 Euro Folder W/ Flange, 5/16 x 9” Capacity 68

A-2216M5 Flat Folder W/ Flange, 5/16 x 6” Capacity 69
1335105 Unwinder Assembly 71
1335M-4000A Unwinder Assembly 73
1335M-4200A Support Frame Assembly 74
1959-800 Roll Holder Assembly 75
1335M-420 Guide Roller Assembly 76
1335M-425 Guide Roller Assembly 77
1335M-430 Guide Roller Assembly 78
1278-6160E Foot Switch Assembly 79
1337A-160 Air Table Assembly 80
1335M-1005 Sit-Down Treadle Assembly 81
1334S-01 Auto Flanging Workstation 83
1959-700A Table & Frame Assembly 85
1335M-500 Control Box Assembly 87
1335M-113 Foot Pressure Assembly 88
1335MD-10 Sewing Head Modification 89
1335MD-3000A Puller Assembly 91
1335M-KIT105 Tensioner Kit 93
1335M-PD Pneumatic Diagram 94
1335M-PDK5 Pneumatic Diagram 95
1959-PD Pneumatic Diagram, Flanging Unit 96
1335M-500WD Wiring Diagram, Control Box 97
1335M-WD Wiring Diagram 98
1335M-01WD Wiring Diagram 99
1334S-01WD Wiring Diagram, Flanging Unit 100

Important Safety Instruction

This part of the Instruction Material is provided for the safe use of your equipment. It contains important information to help work safely with the unit and describes the dangers inherent in machinery. Some of these dangers are obvious, while others are less evident.

Mandatory Information

All persons operating and/or working on the 1335 Border Ruffler Workstation should read and understand all parts of the Safety Instructions. This applies, in particular, for persons who only operate and/or work on the unit occasionally (e.g. for maintenance and repair). Persons who have difficulty reading must receive particularly thorough instruction.

Scope of the Instruction Material

- The Instruction Material comprises:
- Safety information
- Operator Instructions
- Electrical and Pneumatic diagrams

And may also include;

- A list of recommended spare parts
- Instruction Manual(s) for components made by other manufacturers
- The layout and installation diagram containing information for installation

Intended Use

Our machines are designed and built in line with the state of the art and the accepted safety rules. However, all machines may endanger the life and limb of their users and/or third parties and be damaged or cause damage to other property, particularly if they are operated incorrectly or used for purposes other than those specified in the Instruction Manual.

Exclusion of Misuse

Non-conforming uses include, for example, using the equipment for something other than it was designed for, as well as operation without duly installed safety equipment. The risk rests exclusively with the end user.

Conforming use of the machine includes compliance with the technical data, information and regulations in all parts of the complete Instruction Material, as well as compliance with the maintenance regulations. All local safety and accident prevention regulations must also be observed.

Liability

The machine should only be operated when in perfect working order, with due regard for safety and the potential dangers, as well as in accordance with the Instruction Material. Faults and malfunctions capable of impairing safety should be remedied immediately. We cannot accept any liability for personal injury or property damage due to operator errors or non-compliance with the safety instructions contained in this booklet. The risk rests exclusively with the end user.

The Instruction Material should always be kept near the machine so that it is accessible to all concerned.

The local, general, statutory and other binding regulations on accident prevention and environmental protection must also be observed in addition to the Instruction Material. The operating staff must be instructed accordingly. This obligation also includes the handling of dangerous substances and provision/use of personal protective equipment.

The Instruction Material should be supplemented by instructions, including supervisory and notification duties with due regard for special operational features, such as the organization of work, work sequences, the personnel deployed, etc.

The personnel's awareness of the dangers and compliance with the safety regulations should be checked at irregular intervals.

Choice and Qualification of Personnel

Ensure that work on the machine is only carried out by reliable persons who have been appropriately trained for such work - either within the company, by our field staff or at our office - and who have not only been duly appointed and authorized, but are also fully familiar with the local regulations. Work on the machine should only be carried out by skilled personnel, under the management and supervision of a duly qualified engineer.

This not only applies when the machine is used for production, but also for special work associated with its operation (start-up and maintenance), especially when it concerns work on the hydraulic or electrical systems, as well as on the software/serial bus system.

Training

Everyone working on or with the machine should be duly trained and informed with regard to correct use of the safety equipment, the foreseeable dangers which may arise during operation of the machine and the safety precautions to be taken. In addition, the personnel should be instructed to check all safety mechanisms at regular intervals.

Responsibilities

Clearly define exactly who is responsible for operating, setting-up, servicing and repairing the machine. Define the responsibilities of the machine operator and authorize him to refuse any instructions by third parties if they run contrary to the machine's safety. This applies in particular for the operators of machines linked to other equipment. Persons receiving training of any kind may only work on or with the machine under the constant supervision of an experienced operator. Note the minimum age limits permitted by law.

A Word to the Operator

The greatest danger inherent in our machines:
is that of fingers, hands or loose clothing being drawn into a machine by live, coasting or rotating tools or assemblies or of being cut by sharp tools or burned by hot elements.

ALWAYS BE CONSCIOUS OF THESE DANGERS!

Safety Equipment on the Machines

All machines are delivered with safety equipment, which shall not be removed or bypassed during operation.

The correct functioning of safety equipment on machines and systems should be checked every day and before every new shift starts, after maintenance and repair work, when starting up for the first time and when restarting (e.g. after prolonged shutdowns).

If safety equipment has to be dismantled for setting-up, maintenance or repair work, such safety equipment shall be replaced and checked immediately upon completing the maintenance or repair work. All protective mechanisms shall be fitted and fully operational whenever the machine is at a standstill or if it has been shut down for a longer period of time.

Damage

If any changes capable of impairing safety are observed in the machine or its mode of operation, such as malfunctions, faults or changes in the machine or tools, appropriate steps must be taken immediately, the machine switched off and a proper lockout tagout procedure followed. The machine should be examined for obvious damage and defects at least once per shift. Damage found shall be immediately remedied by a duly authorized person before resuming operation of machine.

The machine should only be operated when in perfect working order and when all protective mechanisms and safety equipment, such as detachable protective mechanisms, emergency STOP systems, etc. are in place and operational.

Faults or Errors

The machine must be switched off and all moving or rotating parts allowed to come to a standstill and secured against accidental restart before starting to remedy any faults or errors.

Signs on the Machine

Safety and danger signs on the machine should be observed and checked at regular intervals to ensure that they are complete and undamaged. They should be clearly visible and legible at all times.
Clothing, Jewelry, Protective Equipment
Long loose hair, loose-fitting clothes, gloves and jewelry, including rings, should be avoided in order to avoid injuries due to being caught, drawn in and wound up inside the machine.

Protective Eyewear

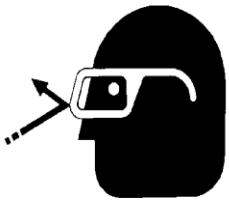

Protective eyewear that has been tested by the local authorities should be worn whenever there is a possibility of loose or flying objects or particles such as when cleaning the machine with compressed air.

Tools

Always count the number of tools in your possession before starting work on the machine. This will allow you to check that no tools have been left behind inside the machine. Never leave a tool in the machine while working.

Oils, Lubricants, Chemicals

Note the applicable safety regulations for the product used.

No Smoking, Fire, Explosion Hazard

Smoking and open flame (e.g. welding work) should be prohibited in the production area due to the risk of fire and explosions.

Workplace

A clear working area without any obstructions whatsoever is essential for safe operation of the machine. The floor should be level and clean, without any waste.

The workplace should be well lit, either by the general lighting or by local lights.

Emergency STOP

The emergency STOP buttons bring all machine movements to a standstill. Make sure you know exactly where they are located and how they work. Try them out. Always ensure easy access to the nearest emergency STOP button while working on the machine.

First Aid

1. Keep calm even when injured.
2. Clear the operator from the danger zone. The decision of what to do and whether to seek additional assistance rests entirely with you, particularly if someone has been trapped.
3. Give First Aid. Special courses are offered by such organizations as the employers' liability insurance association. Your colleagues should be able to rely on you and vice versa.
4. Call an ambulance. Do you know the telephone numbers for the ambulance service, police and fire service?

Important Notices

Reporting and Fighting Fires

Read the instructions posted in the factory with regard to reporting fires and the emergency exits. Make sure you know exactly where the fire extinguishers and sprinkler systems are located and how they are operated. Pass on the corresponding information to the firemen when they arrive. Ensure there are enough signs to avoid fire hazards.

The following fire extinguishers may be used:
- Dry powder extinguishers, ABC fire-extinguishing powder.
- Carbon dioxide fire extinguishers to DIN 14461 for electronic components. Great care must be exercised when using carbon dioxide fire extinguishers in confined, badly ventilated rooms (see DIN 14406 and 14270).

Isolate the machine from the power supply if a fire breaks out. Do not use water on burning electrical parts until it is absolutely certain that they have been completely disconnected from the power supply. Burning oils, lubricants, plastics and coatings on the machine can give off gases and vapors that may be harmful to your health.
A qualified person should be consulted to repair the damage after a fire.

Electrical Power Supply

Before undertaking any maintenance or repair work on the machine, switch off the electrical power to the machine at the main source and secure it with a padlock so that it cannot be switched on again without authorization.
In practice, this may mean that the technician, electrician and operator all attach their own padlock to the master switch simultaneously so that they can carry out their work safely. Locking extension plates should be available for multiple locks if required. The primary purpose for a lockout/tagout procedure is to protect workers from injury caused by unexpected energizing or start-up of equipment.

Energy sources (electrical/pneumatic/hydraulic, etc.) for the equipment shall be turned off or disconnected and the switches locked or labeled with a warning tag. It is the responsibility of the employer to establish control procedures. Follow lockout/tagout procedures before, setup and/or any service or maintenance work is performed, including lubrication, cleaning or clearance of jams.

Caution: The machine is still not completely de-energized even when the master switch is off.

- Electricity - The machine is always isolated from the electrical power supply whenever the master switch has been switched off. However, this does not apply for the power supply in the control cabinet, nor for equipment that does not draw its power via the master switch.

- Pneumatic / hydraulic energy - Almost all our machines carry compressed air. In addition to switching off the master switch, the air supply must also be disconnected and the machine checked to ensure it is depressurized before starting any work on the machine; otherwise the machine may execute uncontrolled movements.

- Kinetic energy - Note that some motors or spindles, for example, may continue to run or coast run on after being switched off.

- Potential energy - Individual assemblies may need to be secured if necessary for repair work.

Delivery of the Machine/Packaging

Note any markings on the packaging, such as weights, lifting points and special information. Avoid temperature fluctuations. Condensation may damage the machine.

Transport Damage

The packaging and machine must immediately be examined for signs of damage in transit. Such damage must be reported to the shipper/transporter within the applicable time limits. Contact Atlanta Attachment Company and/or your transport insurer immediately, if signs of damage are visible. Never operate a damaged machine.

Interim Storage

If the machine has to be stored temporarily, it must be oiled or greased and stored in a dry place where it is protected from the weather in order to avoid damage. A corrosion-inhibiting coating should be applied if the machine has to be stored for a longer period of time and additional precautions taken to avoid corrosion.

Transporting the Machine

Disconnect the machine from all external connections and secure any loose assemblies or parts. Never step under a suspended load. When transporting the machine or assemblies in a crate, ensure that the ropes or arms of a forklift truck are positioned as close to the edge of the crate as possible. The center of gravity is not necessarily in the middle of the crate. Note the accident prevention regulations, safety instructions and local regulations governing transport of the machine and its assemblies.

Only use suitable transport vehicles, hoisting gear and load suspension devices that are in perfect working order and of adequate carrying capacity. Transport should only be entrusted to duly qualified personnel.

Never allow the straps to rest against the machine enclosure and never push or pull sensitive parts of the machine. Ensure that the load is always properly secured. Before or immediately after loading the machine, secure it properly and affix corresponding warnings.
All transport guards and lifting devices must be removed before the machine is started up again. Any parts that are to be removed for transport must be carefully refitted and secured before the machine is started up again.

Workplace Environment

Our machines are designed for use in enclosed rooms: Permissible ambient temperature approx. 5 - 40 °C (40 - 104 °F). Malfunctions of the control systems and uncontrolled machine movements may occur at temperatures outside this range.
Protect against climatic influences, such as electrostatic charges, lightning strikes, hail, storm damage, high humidity, salinity of the air in coastal regions.

Protect against influences from the surroundings: no structure-borne vibrations, no grinding dust, or chemical vapors.
Protect against unauthorized access.
Ensure that the machine and accessories are set up in a stable position.
Ensure easy access for operation and maintenance (Instruction Manual and layout diagram); also verify that the floor is strong enough to carry the weight of the machine.

Local Regulations

Particular attention must be paid to local and statutory regulations, etc. when installing machines and the plant (e.g. with regard to the specified escape routes). Note the safety zones in relation to adjacent machines.

Maintenance

General Safety Instructions

The machine shall be switched off, come to a standstill and be secured so that it cannot be switched on again inadvertently before starting any maintenance work whatsoever. Use proper lockout/tagout procedures to secure the machine against inadvertent startup.
Remove any oil, grease, dirt and waste from the machine, particularly from the connections and screws, when starting the maintenance and/or repair work. Do not use any corrosive-cleaning agents. Use lint-free rags.
Retighten all screw connections that have to be loosened for the maintenance and repair work. Any safety mechanisms that have to be dismantled for setting-up, maintenance or repair purposes must be refitted and checked immediately after completing the work.

Maintenance, Care, Adjustment

The activities and intervals specified in the Instruction Manual for carrying out adjustments, maintenance and inspections must be observed and parts replaced as specified.

All hydraulic and pneumatic lines should be examined for leaks, loose connections, rubbing and damage whenever the machine is serviced. Any defects found must be remedied immediately.

Waste, Disassembly, Disposal

Waste products should be cleared from the machine as soon as possible as not to create a fire hazard. Ensure that fuels and operating lubricants, as well as replacement parts are disposed of in a safe and ecologically acceptable manner. Note the local regulations on pollution control.

When scrapping (disassembling) the machine and its assemblies, ensure that these materials are disposed of safely. Either commission a specialist company familiar with the local regulations or note the local regulations when disposing of these materials yourself. Materials should be sorted properly.

Repair

Replacement Parts

We cannot accept any liability whatsoever for damage due to the use of parts made by other manufacturers or due to unqualified repair or modification of the machine.

Repair, Electrical

The power supply must be switched off (master switch off) and secured so that it cannot be switched on again inadvertently before starting any work on live parts.

Those parts of the machine and plant on which inspection, maintenance or repair work is to be carried out must be isolated from the power supply, if specified. The isolated parts must first be checked to determine that they are truly de-energized before being grounded and short-circuited. Adjacent live parts must also be isolated.

The protective measures implemented (e.g. grounding resistance) must be tested before restarting the machine after all assembly or repair work on electric parts.

Signal generators (limit switches) and other electrical parts on the safety mechanisms must not be removed or bypassed. Only use original fuses or circuit overloads with the specified current rating. The machine must be switched off immediately if a fault develops in the electrical power supply.

The electrical equipment of our machines must be checked at regular intervals and any defects found must be remedied immediately.

If it is necessary to carry out work on live parts, a second person should be on hand to operate the emergency OFF switch or master switch with voltage release in the event of an emergency. The working area should be cordoned off and marked by a warning sign. Only use electrically insulated tools.

Ventilation/Hazardous Gases

It is the end users responsibility to ensure adequate ventilation is provided to exhaust any and all noxious or hazardous gases that may be present in the working environment.

Hydraulic and Pneumatic Systems

Work on hydraulic or pneumatic equipment shall only be carried out by persons with training, knowledge and experience of hydraulic systems. Pressure lines shall be depressurized before starting any repair work.

General Liability

Liability for machine damage and personal injury is extinguished completely if any unauthorized conversions or modifications are undertaken. The machine must not be modified, enlarged or converted in any way capable of affecting safety without the manufacturer's prior approval.

Starting Machine Movements

Read the Instruction Manual carefully to establish which keys and functions start machine movements.

A Word to the End User

The end user has sole responsibility to enforce the use of safety procedures and guards on the machine. Any other safety devices or procedures due to local regulations should be should be retrofitted in accordance to these regulations and/or the EC Directive on the safety of machines.

Operator's position must always be readily accessible. Escape routes must always be kept clear and safety areas should be identified.

Safety Precautions

Safety should be a constant concern for everyone. Always be careful when working with this equipment. While normal safety precautions were taken in the design and manufacture of this equipment, there are some potential safety hazards.
Everyone involved with the operation and maintenance of this equipment should read and follow the instructions in this manual.
Operate the equipment only as stated in this manual. Incorrect use could cause damage to the equipment or personal injury.
It is the owner's responsibility to make certain that the operator reads and understands this manual before operating this equipment. It is also the owner's responsibility to make certain that the operator is a qualified and physically able individual, properly trained in the operation of this equipment.
Specific safety warning decals are located on the equipment near the immediate areas of potential hazards. These decals should not be removed or obliterated. Replace them if they become non-readable.

- ALWAYS keep safety shields and covers in place, except for servicing.
- ALWAYS maintain a safe distance from people when operating.
- ALWAYS operate equipment in daylight or with adequate working lights.
- Follow daily and weekly checklists, making sure hoses are tightly secured and bolts are tightened.
- ALWAYS watch and avoid holes or deep depressions.
- ALWAYS wear adequate eye protection when servicing the hydraulic system and battery.
- NEVER operate a poorly maintained machine.
- NEVER allow persons to operate this machine without proper instruction.
- NEVER put hands or feet under any part of the machine while it is running.
- NEVER attempt to make any adjustments or repairs to the machine while running. Repairs or maintenance should be performed by trained personnel only.
- NEVER work under the machine unless it is safely supported with stands, blocks or a hoist and blocks.
- NEVER touch hot parts of machine.

General Machine Data

Electrical & Pneumatic Specifications

Electrical:	220 VAC, 5amp, 50/60 Hz Single Phase
Pneumatic:	70-80 PSI, 2 SCFM avg.
Sewing Head:	Mitsubishi LS2-2210 Lockstitch
Sewing Speed:	4000 RPM
Needle (Standard):	Schmetz DBX1 Size 140
Stitch Density:	6 SPI
Sewing Head:	Juki MH481U Chainstitch
Sewing Speed:	4000 RPM
Needle (Standard):	Schmetz TVx7 Size 16
Stitch Density:	6 SPI

Installation & Setup

- Provide a 220VAC, single phase, 5 Amp electrical drop and 1/4" air supply line (80 PSI).
- Remove any shipping straps from machine.
- Mount and adjust the Guide Roller Assembly. (See Fig. 1)
- Check the oil level in the oil pan. To check oil, unclamp the puller motor bracket and lean the puller motor back. (See Fig. 2) Then lean the head back to access the oil pan. Be sure to re-clamp the puller motor bracket and insert the puller drive shaft into the u-joint

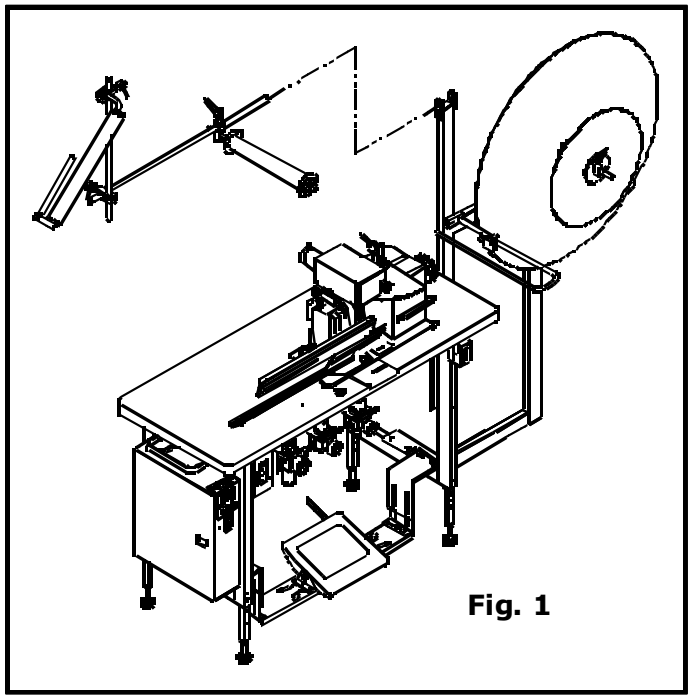

Fig. 1

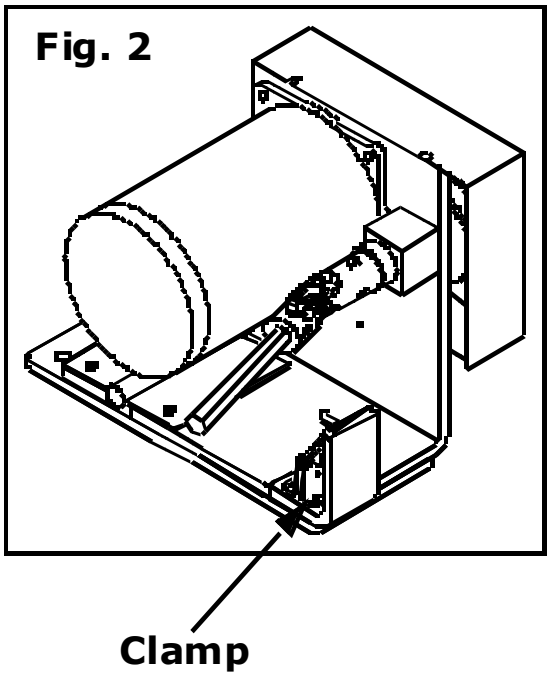

Control Box Operation

Main Control Box:

The front of the main control box has an Auto/Manual Switch, a Manual Ruffle Pushbutton, an Unwinder Reverse Switch, a Fuse Holder, and 6 Thumbwheels. On the back is the power entry socket and an on/off switch. Be sure the on/off switch is always on.

Note: The on/off switch only switches one line and does not make the box safe to work on. Always disconnect the main power cord before servicing the control box.

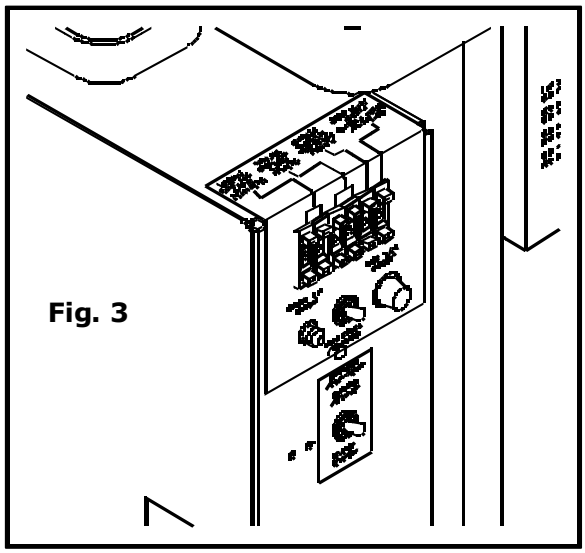

Fig. 3

The Auto/Manual Switch turns on the automatic ruffling cycles for the corners. When this switch is in Manual, the ruffling is disabled and the machine will only sew, trim, and foot lift.

The Manual Ruffle pushbutton turns on one ruffle cycle and also functions as the Reset button for the automatic cycle. Pushing this button once will turn on the ruffle cycle. Pushing it a second time will reset the automatic program and cause the ruffle hardware to reset and go to its "Home" position. Use this button to reset the ruffler after adjusting the ruffle size.

The Unwinder Reverse switch controls the direction of the Unwinder reel. Use to set the proper direction depending on how the gusset material is wound. The Unwinder will run whenever the Treadle is not in the neutral position (either sewing or healed back) and the Loop Eye is seeing the gusset material.

The Fuse Holder fuses the entire machine. Replace the fuse with a 5A Slow Blow 250v as necessary.

Thumbwheels

The first Thumbwheel on the left controls the on time of the Unwinder motor. It controls how long the motor runs after the Loop Eye has seen the gusset material. It is usually set to 9.

The second Thumbwheel controls the sewing speed of the sewing head during ruffling. Each increment is approximately 100 rpm. The normal setting is "6".

The third and fourth Thumbwheels together make up the Stop count for the corners. This is the stitch count (00-99 stitches) from when the front eye uncovers until the sewing stops in the corner to start the ruffling cycle. This should be adjusted to stop the panel so that when the corner turn is finished the right edge of the panel is flush against the edge guide. If, after turning the corner, the right edge of the panel is to the left of the edge guide, decrease the stitch count to stop the panel sooner. If, after turning the corner, the right edge of the panel is to the right of the edge guide, increase the stitch count to stop the panel closer to the foot.

The fifth Thumbwheel sets the number of ruffles to be sewn in each corner. Adjust this setting along with the ruffle size to achieve desired corner finish.

The sixth Thumbwheel sets the number of stitches sewn in each ruffle and is adjusted according to the ruffle size. There should be enough stitches to sew to the folded edge of each ruffle.

Stepper Control Boxes

There are two stepping motor boxes located under the table. The box with the 10-turn adjustable potentiometer on the front controls the Ruffler and the box without controls the Puller.

The Puller box has three Thumbwheels on the front which are set to synchronize the puller to the sewing head. The number is proportional to the stitch LENGTH and is not affected by sewing speed.

The Ruffler box has three Thumbwheels on the front which are set to synchronize the Ruffler to the sewing head. The number is proportional to the stitch LENGTH and is not affected by sewing speed. The 10-turn potentiometer is used to set the speed of the Ruffler during the feed in to pleat and feed out to make the next ruffle. It is set to maximum and is locked in place by a small locking lever. Unlock to adjust.

Each box has its own on/off switch on the back where the power cord plugs in. Leave this switch on all the time.

Note: The on/off switch only switches one line and does not make the box safe to work on. Always disconnect the main power cord before servicing the control box.

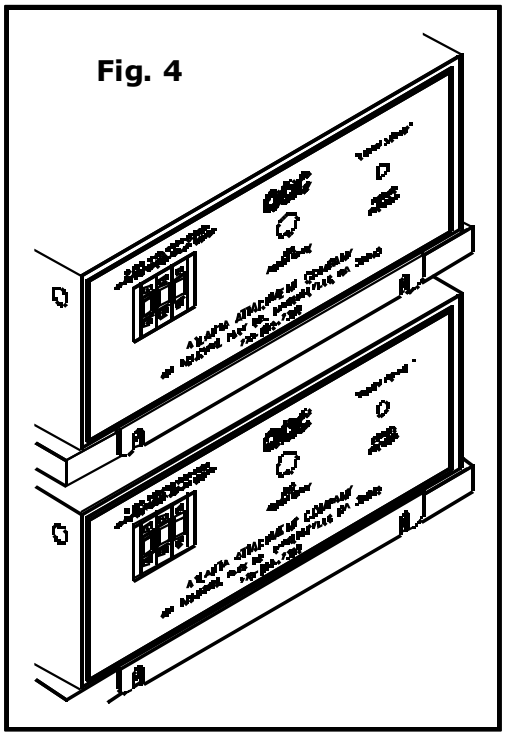
Fig. 4

Efka Control Boxes

The sewing machine is powered by the Efka motor controller located under the table. It has its own on/off switch which should be left on at all times. It also has some small buttons and LED's on the front to indicate the enabled functions. The only LED that should be on is the second to last from the bottom which sets the control to stop the machine needle down at neutral treadle and needle up after full heal back. The functions can be changed upon power up or after a full heal back. The control box has been preprogrammed to operate with the Ruffler. If the box were replaced, the new box would need to be programmed according to the included parameter list in order to function properly. Notice that the sewing head does not stop at normal needle up (lockstitch heads) position after full heal back, but stops at needle top dead center to allow more room for loading thicker material (the head actually turns in reverse for a moment).

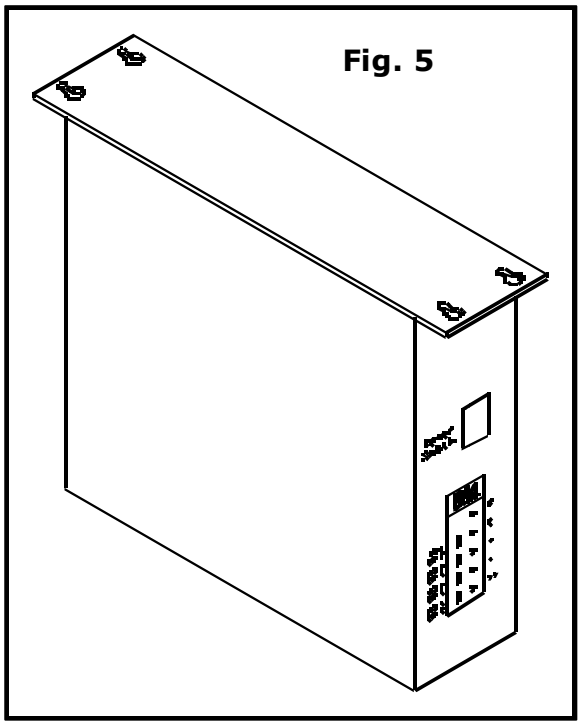
Fig. 5

Basic Machine Operation

Loading the Gusset Roll and Unwinder

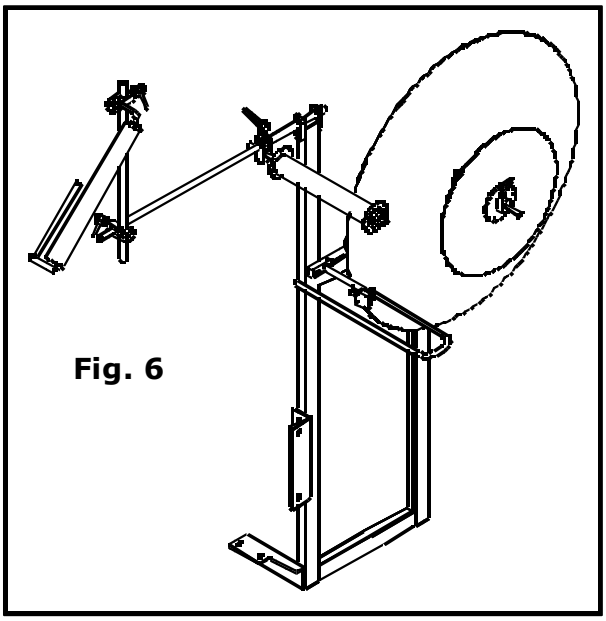
Fig. 6

Remove the small disc from the Unwinder spindle. Load the gusset (or border) roll onto the Unwinder spindle so the good side is up and the flange is toward the large disc as the material comes off the roll to the left. The gusset must pass through the guide rod with the Loop Eye so that the Loop Eye will see the material when the loop gets too high. Replace the small disc onto the spindle with just enough pressure on the roll to cause it to turn with the spindle. Heal back on the treadle to activate the Unwinder and create a loop of gusset as you continue to load the machine. If the Unwinder runs in the wrong direction, flip the direction switch located on the main control box. Feed the gusset over the top rollers and down to the folder with the good side toward the sewing head. (When making continental foundations, the good side will face the operator)

Loading and Adjusting the Folder

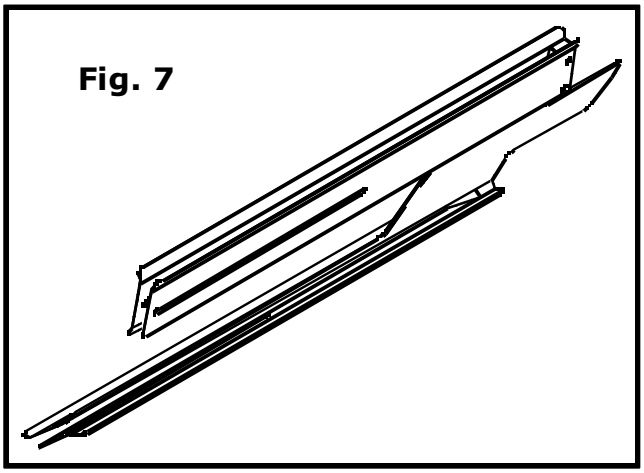
Fig. 7

Feed the gusset through the top portion of the folder with the flange to the right and under the right flange guide. Adjust the left guide to make a snug fit to the gusset width. Adjust the folder left or right as necessary to set the desired stitch margin. Normally, with the folder positioned to its right most position in its slots, a 6" wide gusset will be centered on the needle. The folder spacers should be sized as required to fit the thickness of the gusset. Extra spacers can be ordered to fit any thickness gusset from 1/8" to 9/16". Adjust the lower portion of the folder in the same manner.

Adjusting the Edge Guide

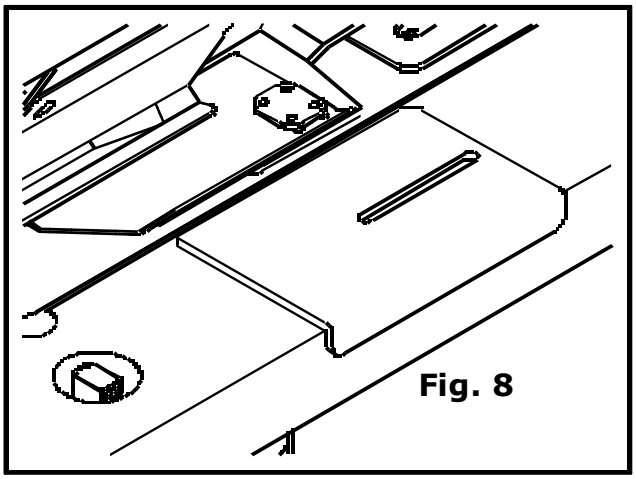
Fig. 8

The edge guide located on the front of the table should be set so its left edge aligns with the right edge of the gusset. This is the guide for the right edge of the panel.

Sewing the Panel

Heal back the treadle or step on the foot lift pedal to raise the presser foot. Swing in the stripper blade and the folder/ruffler assembly. Be sure the sensor at the back of the swing-out bracket is lit indicating that the bracket is all the way in to the detent. Pull the gusset through the folder, under the presser foot and under the puller. Load the panel under the gusset with the center of the short side even with the needle and the edge of the panel against the edge guide. Lower the presser foot. Be sure the Auto/Manual switch is in its Auto position (up).

Sew the panel to the corner being sure not to get your hands in the way of the electric eye mounted under the table which must "see" the edge of the panel as it nears the presser foot. The machine will stop automatically at the corner. Go to neutral treadle as you position your hands for turning. Place your right hand on the panel near the presser foot and your left hand about 1 foot to the left on the panel. Treadle forward and allow the machine to make the first ruffle sewing straight. Begin to rotate the panel as the rest of the ruffles are formed. Try to turn an equal amount with each ruffle so that when the ruffles are complete the panel has turned 90 degrees and the right edge of the panel is resting against the left edge of the edge guide. The ruffles can be made one at a time by going to neutral treadle between each ruffle. Complete all four corners.

Adjusting the Corner Ruffles

The ruffles should be set so the outer edge of the gusset lays flat for taping. A typical ruffled gusset will have 3 or 4 large ruffles which butt against each other without overlapping or gaps between them. Adjust Thumbwheels #5 and #6 and the ruffle size knob to achieve the desired finish. Euro style gussets typically have 3 or 4 small ruffles with extra stitches between them.

Finishing the Panel

After the last corner, sew the panel until the starting edge of the gusset is almost to the presser foot. Stop and swing out the folder. Cut the gusset so that there is enough overlap of gusset for finishing. Swing out the stripper blade. Fold the trailing edge of the gusset under itself, lay it on top of the starting edge and oversew the two together. Heal back and remove the panel.

Efka Control Box Settings

The Efka control has been preprogrammed to operate the sewing head in conjunction with the ruffler. The maximum sewing speed has been preset to 4000 RPM. The maximum sewing speed can be temporarily reduced by holding in the "-" button on front of the control box while sewing. To restore maximum speed use the "+" button. Be sure the needle down LED is the only LED lit on front of the control box. The LED's can be changed only immediately after power on or a full healback. Refer to the appendix for complete Efka programming parameters.

General Machine Adjustments

Air Pressure

Set all air supply pressure regulators (Right to left):

Main Pressure:	70 PSI
Puller Pressure:	30 PSI
Ruffle Blade Pressure:	10 PSI
Foot Sew Pressure:	15 PSI

Sewing Head

See the manufacturer's manuals for normal adjustments and parts. The presser foot spring pressure should be set very light so that the ruffling blade can feed under the foot while ruffling. The Efka motor should be set for stopping needle down at neutral treadle to help hold the ruffle in place while turning the corners. The auxiliary foot pressure cylinder should be set to provide added foot pressure while sewing straight.

Ruffler Drive

Set the Ruffler blade position left to right. The slot in the Ruffler blade should align with the sewing needle. Loosen the 4 clamp screws and adjust ruffler blade left or right as needed.

Set the Ruffler blade IN position so that the front edge of the blade is even with the needle when the ruffler drive is positioned at the IN sensor. To position the drive at the sensor, press the manual ruffle button once and quickly tap the treadle or sew pedal. The Ruffler should position itself at the IN sensor. Adjust the sensor position in its slot, press the manual ruffle button to reset the ruffler and repeat the cycle to test the setting.

Set the Ruffler blade OUT position by turning the adjusting knob on the front cover of the ruffler drive. This controls how big each ruffle will be. After making an adjustment, always reset the ruffler by pressing the manual ruffle button twice.

The swing-out stripper blade protects the panel from the ruffler blade while ruffling so that the panel does not get pleated by the blade. It should be positioned as close to the presser foot as possible. The ruffling air pressure should be set as high as practical without it pressing the stripper blade down and pinching the panel while turning.

Puller Drive

Set the puller down position as low as practical without actually touching the cloth plate. The roller should be centered on the needle. Set the Puller air pressure as needed to provide positive feeding without the puller stalling at high speed.

Unwinder Assembly

The Unwinder is belt driven from a right angle gear motor. The motor and bearings are permanently lubricated and require no regular maintenance. Check the belt tension periodically and adjust if necessary. Check the gear pulley and bearing set screws for tightness. The electric eye mounted on the guide rod should be set to "see" the gusset material before the loop is entirely used up.

General Machine Maintenance

Daily

Clean machine at the end of every shift
Clean lint etc. from the Looper/bobbin area on the sewing head
Remove any threads wrapped around moving parts of the handwheel, puller, and ruffler.
Wipe all photo eye lenses with clean, nonabrasive, dry cloth
Use blow-off hose to get rid of excess lint, thread and other clippings
Follow manufactures recommendations and guidelines for daily maintenance and lubricating of the sewing head.

Weekly

Check all belts for tightness and condition. Adjust or replace as necessary.
Check oil level in oil pan.
Put one drop of machine oil on all moving Ruffler parts.

Electric Eye Sensor Adjustment

To adjust the sensor, first remove the clear plastic cover from the end of the sensor. There are two adjusting screws under the cover. One is labeled "GAIN" and is used to set the sensitivity of the sensor. The other screw is labeled "DO & LO" and should always be fully clockwise.

With the end of the sensor pointing at the center of the reflective tape, turn the "GAIN" screw counter-clockwise until the red LED indicator is off. Then turn the "GAIN" screw clockwise until the LED indicator comes on. Then turn the "GAIN" screw one full turn clockwise. The LED indicator should be blinking slowly. Cover the eye so that the sensor cannot see the reflective tape and the LED should go off.

Reflective Tape Maintenance

Use a soft cloth for cleaning.
Do not use chemicals or abrasives to clean it.
Avoid any contact with oils and liquids.
Do not touch the tape with bare fingers.
If tape is dirty or opaque, the eye may not function correctly.

11335M Recommended Spare Parts List

Contact AAC's sales department to order replacement parts.

Phone: 770-963-7369
Fax: 770-963-7641
Email: sales@atlatt.com
Website: www.atlatt.com

AAC Part # SP1335M Spare Parts Kit

NO.	QTY	PART #	DESCRIPTION	NO.	QTY	PART #	DESCRIPTION
1	1	1278-7055B	Prox Switch	5	1	GG100XL037	Gear Belt
2	2	1335M-2002C	Ruffler Blade	6	1	GG110XL75U	Gear Belt
3	2'	EEFE-RR2	Reflective Tape	7	1	GG187L050	Gear Belt
4	1	FFSM312LVQ	Electric Eye	8	100	SNDBX1140	Needle

1335M EFKA Motor Parameter List

PARAMETER	RANGE	MITSUBISHI LOCHSTITCH	JUKI CHAINSTITCH	YAM 1804 CHAINSTITCH	YAM 2002 CHAINSTITCH	SING 300UX5 WALKING FOOT	1335M PARAMETER DESCRIPTION
Do this first	*****	****	****				Perform a master reset before programming, see below
290		0	5	5	5	5	Mode (Lockstitch) of operation. MUST SET THIS PARAMETER FIRST!
111	200-9900 rpm	400	400	350	320	250	Maximum speed when "129" is 0, 1, or 2.
153	0-50	--	--	--	--	35	Braking power at machine stand still
161	0-1	1	1	0	1	1	Motor rotation, 1=CCW
180	0-360 (175)	60	--	--	--	--	Degrees reverse run goes to get to needle up
181	0-999 (10)	01	--	--	--	--	Delay till reverse run starts after trim
182	0-1 (0)	1	0	0	0	0	Enable reverse run after trim to get to "true" needle up
202	0-500	50	50	500	500	500	Sew delay after foot lift off
219	1-55	35	--	--	35	35	Breaking power at stop
250	0-359	150	--	--	--	--	Thread trimmer activation angle
270	0-5	1	1	1	1	1	External handwheel sensor configuration. (Position 2)
271	0-255	180	180	165	165	165	Ref angle for Position 1 (Trim) from Position 2
272	020-255	100	100	100	100	100	Drive ratio between motor pulley and handwheel pulley. If handwheel pulley is smaller than motor pulley, increase this value to slow down sewing head until measured speed matches speed set with parameter 111. (For Yamato and Pegasus, setting should be 100; for Rimoldi, setting should be 124)
Front panel LED's:							
LED 1:	Off						**Programming Instructions:**
LED 2:	Off						1. Power on holding down the "P" button till "COD" is displayed.
LED 3:	Off						2. Press ">>" once and enter the number "311"
LED 4:	Off						3. Press "E" once and "2.0.0." is displayed this is a parameter
LED 5:	Off						4. Proceed to the parameter to be changed and press "E".
LED 6:	Off.						5. The value now shows in the screen, adjust to desired value.
LED 7:	ON, Stop at needle down.						6. Press "E" to enter value and continue with parameter setting.
LED 8:	OFF, Stop at needle up.						7. Repeat for other parameters, press "P" once when complete.
							8. Run sewing head to save parameters before powering down
							To Perform Master Reset of Parameters:
							1. Power on holding down the "P" button till "COD" is displayed.
							2. Press ">>" once and enter the number "591"
							3. Press "E" twice and "093" is displayed.
							4. Press "+" once, "094" is displayed.
							5. Press "P" to exit programming mode with all default values.

1335M Folder Spacer Reference Chart

QUANTITY	ASBLY#	PREFLANGED, OFFSETABLE, 6" CAPACITY A-2216K																PREFLANGED, OFFSETABLE, 9" CAPACITY A-2216L																CONTINENTAL BORDER, 18" CAPACITY A-2216M															
	PART#	DESC.	1/8	3/16	1/4	5/16	3/8	7/16	1/2	9/16	5/8	11/16	3/4	1/8	3/16	1/4	5/16	3/8	7/16	1/2	9/16	5/8	11/16	3/4	1/8	3/16	1/4	5/16	3/8	7/16	1/2	9/16	5/8	11/16	3/4	1"
THRU HOLES	A-2216D40	L. GUIDE,1/8,KEYED,ALU	2																						1											
	A-2216D32	L. GUIDE, 3/16,KEYED,ALU		2											2											1										
	A-2216D33	L. GUIDE, 1/4,KEYED,ALU			2											2									1		1									
	A-2216D34	L. GUIDE,5/16KEYED,ALU				2											2								1		1		1							
	A-2216D35	L. GUIDE,3/8,KEYED,ALU					2											2								1		1		1						
	A-2216D37	L. GUIDE,7/16,KEYED,ALU						2											2								1		1		1					
	A-2216D38	L. GUIDE, 1/2,KEYED,ALU							2											2								1		1						
	A-2216D39	L. GUIDE,9/16,KEYED,ALU								2											2								1		1					
	A-2216D59	L. GUIDE,5/8,KEYED,ALU									2											2								1		1				
	A-2216D60	L. GUIDE,11/16,KEYED,ALU										2											2								1		1			
	A-2216D61	L. GUIDE,3/4,KEYED,ALU											2											2									1	1	2	
	A-2216D65	R. GUIDE,7/8,KEYED,ALU																																		
	A-2216D30	L. GUIDE,1",KEYED,ALU																																		2
THREADED HOLES	A-2216D58	R. GUIDE,1/16,KEYED,THDED	2											2																						
	A-2216D51	R. GUIDE,1/8,KEYED,THDED		2											2																					
	A-2216D52	R. GUIDE,3/16,KEYED,THDED			2											2																				
	A-2216D53	R. GUIDE, 1/4,KEYED, THDED				2											2																			
	A-2216D54	R. GUIDE,5/16,KEYED, THDED					2											2																		
	A-2216D55	R. GUIDE,3/8,KEYED, THDED						2											2																	
	A-2216D56	R. GUIDE,7/16,KEYED, THDED							2											2																
	A-2216D57	R. GUIDE,1/2,KEYED, THDED								2											2															
	A-2216D62	R. GUIDE,9/16,KEYED, THDED									2											2														
	A-2216D63	R. GUIDE,5/8,KEYED, THDED										2											2													
	A-2216D64	R. GUIDE,11/16,KEYED, THDED											2											2												
THRU HOLES	A-2216G14	SPACER,1/16(2 HOLE)																																		
	A-2216G24	SPACER,1/8(2 HOLE)	2											2											1											
	A-2216G32	SPACER,3/16(2 HOLE)		2											2											1										
	A-2216G33	SPACER,1/4(2 HOLE)			2											2									1		1									
	A-2216G29	SPACER,5/16(2 HOLE)				2											2								1		1		1							
	A-2216G21	SPACER,3/8(2 HOLE)					2											2								1		1		1						
	A-2216G30	SPACER,7/16(2 HOLE)						2											2								1		1		1					
	A-2216G31	SPACER,1/2(2 HOLE)							2											2								1		1						
	A-2216G34	SPACER,9/16(2 HOLE)								2											2								1		1					
	A-2216G41	SPACER,5/8(2 HOLE)									2											2								1		1				
	A-2216G42	SPACER,11/16(2 HOLE)										2											2									1		1		
	A-2216G43	SPACER,3/4(2 HOLE)											2											2									1	1	2	
	A-2216G36	SPACER,7/8"(2 HOLE)																																		
	A-2216G35	SPACER,1"(2 HOLE)																																		2
	SSBC08024	SCREW, 10-32 X 3/8																																		
	SSBC08032	SCREW, 10-32 X 1/2																																		
	SSBC08040	SCREW, 10-32 X 5/8	4	4										4	4										4	4										
	SSBC08048	SCREW, 10-32 X 3/4			4	4										4	4								2	2	4	4								
	SSBC08056	SCREW, 10-32 X 7/8					4	4										4	4								2	2	4	4						
	SSBC08064	SCREW, 10-32 X 1							4	4										4	4								2	2	4	4				
	SSBC08072	SCREW, 10-32 X 1-1/8									4											4									2	2	4			
	SSBC08080	SCREW, 10-32 X 1-1/2										4	4										4	4									2	6	6	6
	1.5" WIDE GUIDES																																			
	1335560	R. GUIDE,5/16,KEYED,ALU																																		
	1335561	R. GUIDE,3/8,KEYED,ALU																																		
	1335562	R. GUIDE,7/16,KEYED,ALU																																		
	1335640	R. GUIDE,1/2,KEYED,ALU																																		

Assembly Drawings & Parts Lists

The materials contained herein are confidential and proprietary information of Atlanta Attachment Company. In addition to any confidentiality and non-disclosure obligations that currently exist between you and Atlanta Attachment Company, your use of these materials serves as an acknowledgment of the confidential and proprietary nature of these materials and your duty not to make any unauthorized use or disclosure of these materials.

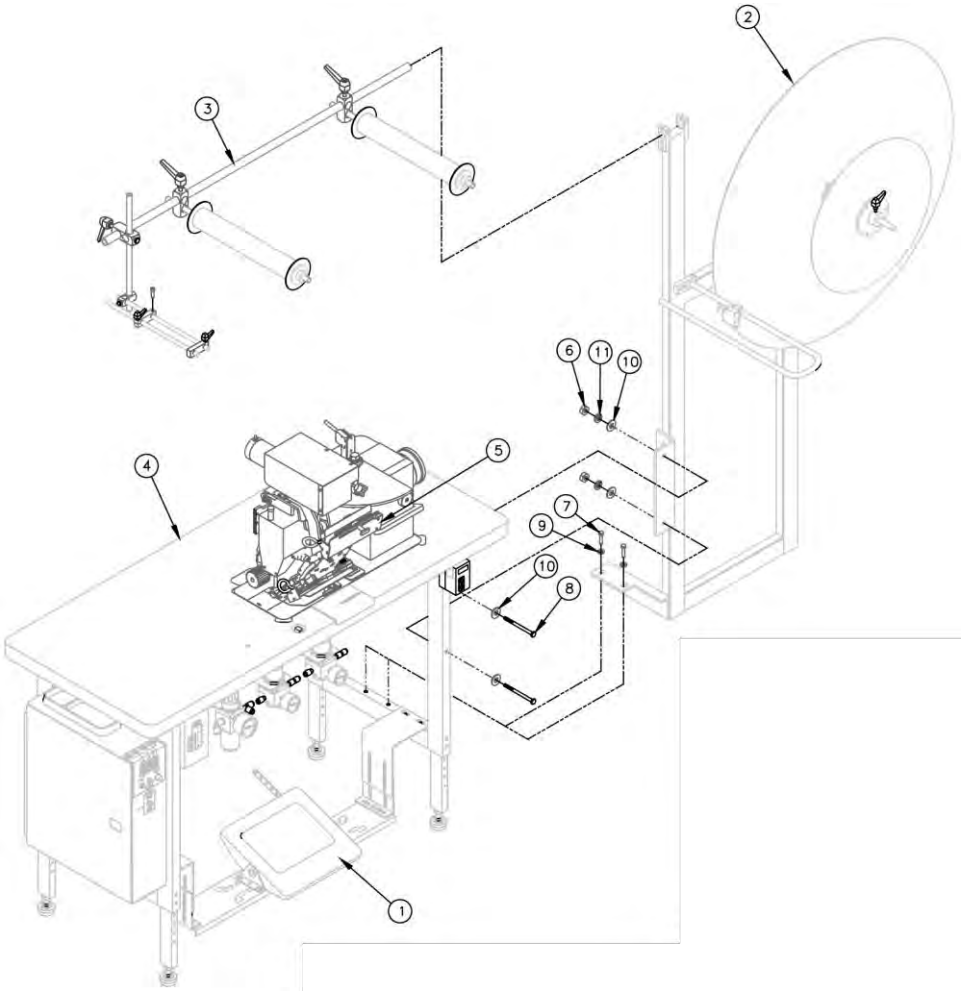

11335M Manual Pillowtop Ruffler, No Flange

AAC Drawing Number 192725C Rev5

NO.	QTY	PART #	DESCRIPTION	
1	1	1335M-1005	Sit Down Treadle Assy	Page 81
2	1	1335M-4000A	Unwinder Assy	Page
3	1	1335M-420	Guide Roller Assy	Page 76
4	1	1335M-G	Generic Console	Page 47
5	1	A-2216G	Book Folder	
6	2	NNH3/8-16	Hex Nut	
7	2	SSHC01048	Screw, Hex Cap	
8	2	SSHC25192	Screw, Hex Cap	
9	2	WWFS1/4	Flat Washer	
10	4	WWFS3/8	Flat Washer	
11	2	WWL3/8	Lock Washer	
12	1	1335M-2002E	Ruffler Blade	
13	10	SNDBX1140	Needle	

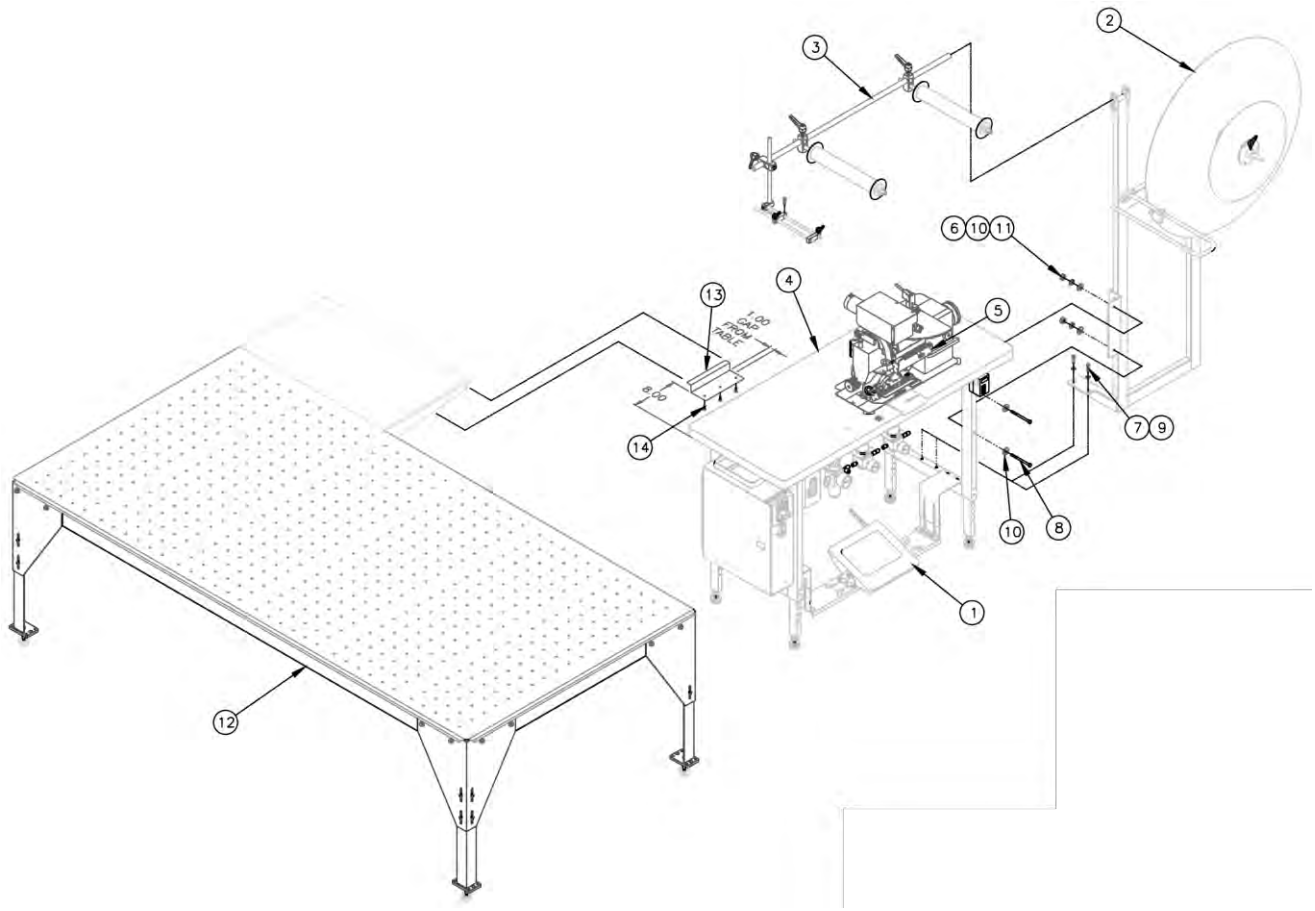

11335M-SDAT Manual Pillowtop Ruffler

AAC Drawing Number 192897C Rev0

NO.	QTY	PART #	DESCRIPTION	
1	1	1335M-1005	Sit Down Treadle Assy	Page 81
2	1	1335M-4000A	Unwinder Assy	Page 73
3	1	1335M-420	Guide Roller Assy	Page 76
4	1	1335M-G	Generic Console	Page 47
5	1	A-2216K5/16	Flat Folder	Page 67
6	2	NNH3/8-16	Hex Nut	
7	2	SSHC01048	Screw, Hex Cap	
8	2	SSHC25192	Screw, Hex Cap	
9	2	WWFS1/4	Flat Washer	
10	4	WWFS3/8	Flat Washer	
11	2	WWL3/8	Lock Washer	
12	1	11337AT	Air Table Assy	Page 25
13	1	1335081	Shelf Support	
14	3	SSZH#10064	Screw, Sheet Metal	

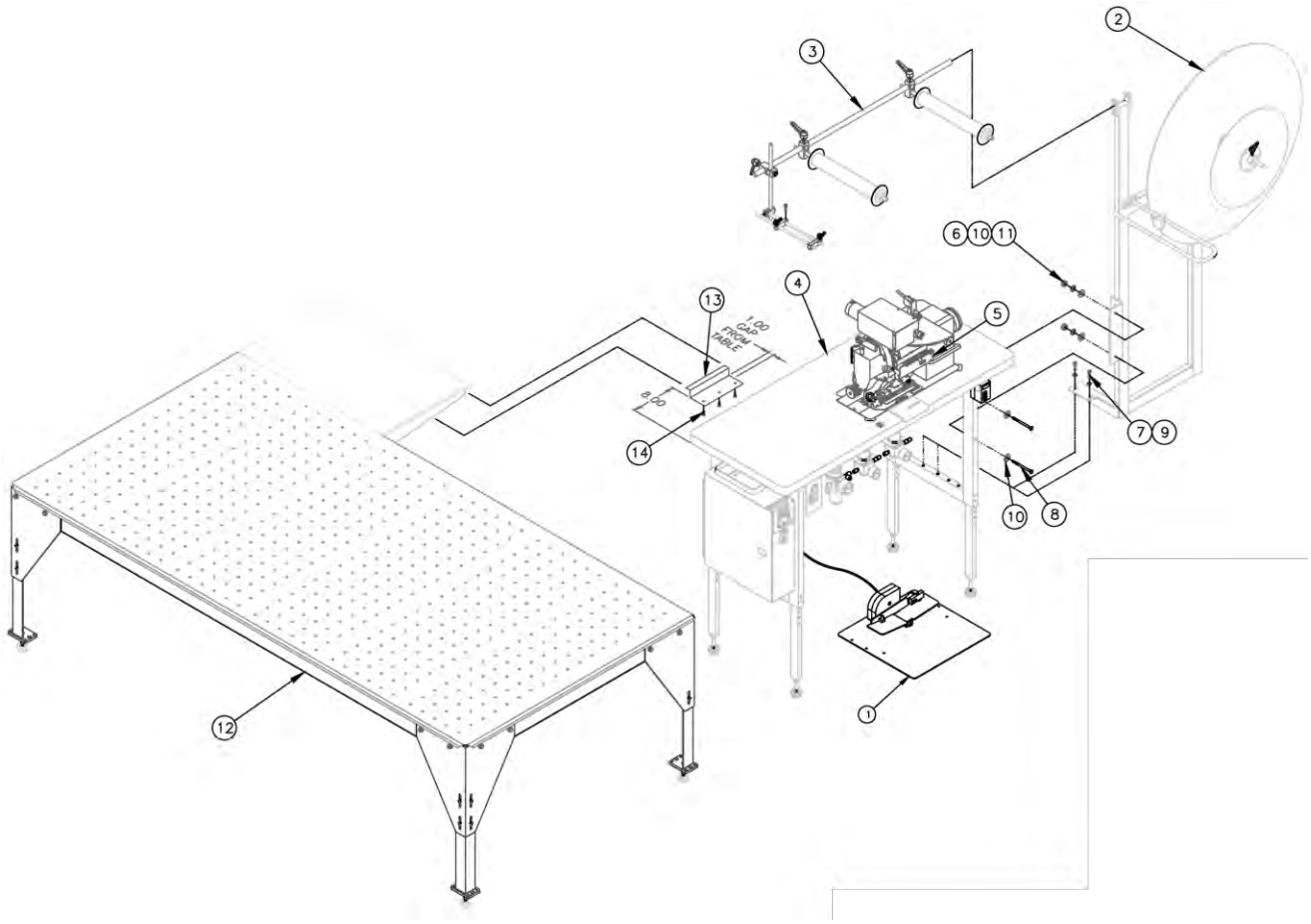

11335M-SUAT Manual Pillowtop Ruffler

AAC Drawing Number 192898C Rev2

NO.	QTY	PART #	DESCRIPTION	
1	1	4059-FP301D	Foot Switch Assy	
2	1	1335M-4000A	Unwinder Assy	Page 73
3	1	1335M-420	Guide Roller Assy	Page 76
4	1	1335M-G	Generic Console	Page 47
5	1	A-2216G	Flat Folder	
6	2	NNH3/8-16	Hex Nut	
7	2	SSHC01048	Screw, Hex Cap	
8	2	SSHC25192	Screw, Hex Cap	
9	2	WWFS1/4	Flat Washer	
10	4	WWFS3/8	Flat Washer	
11	2	WWL3/8	Lock Washer	
12	1	11337AT	Air Table Assy	Page 25
13	1	1335081	Shelf Support	
14	3	SSZH#10064	Screw, Sheet Metal	

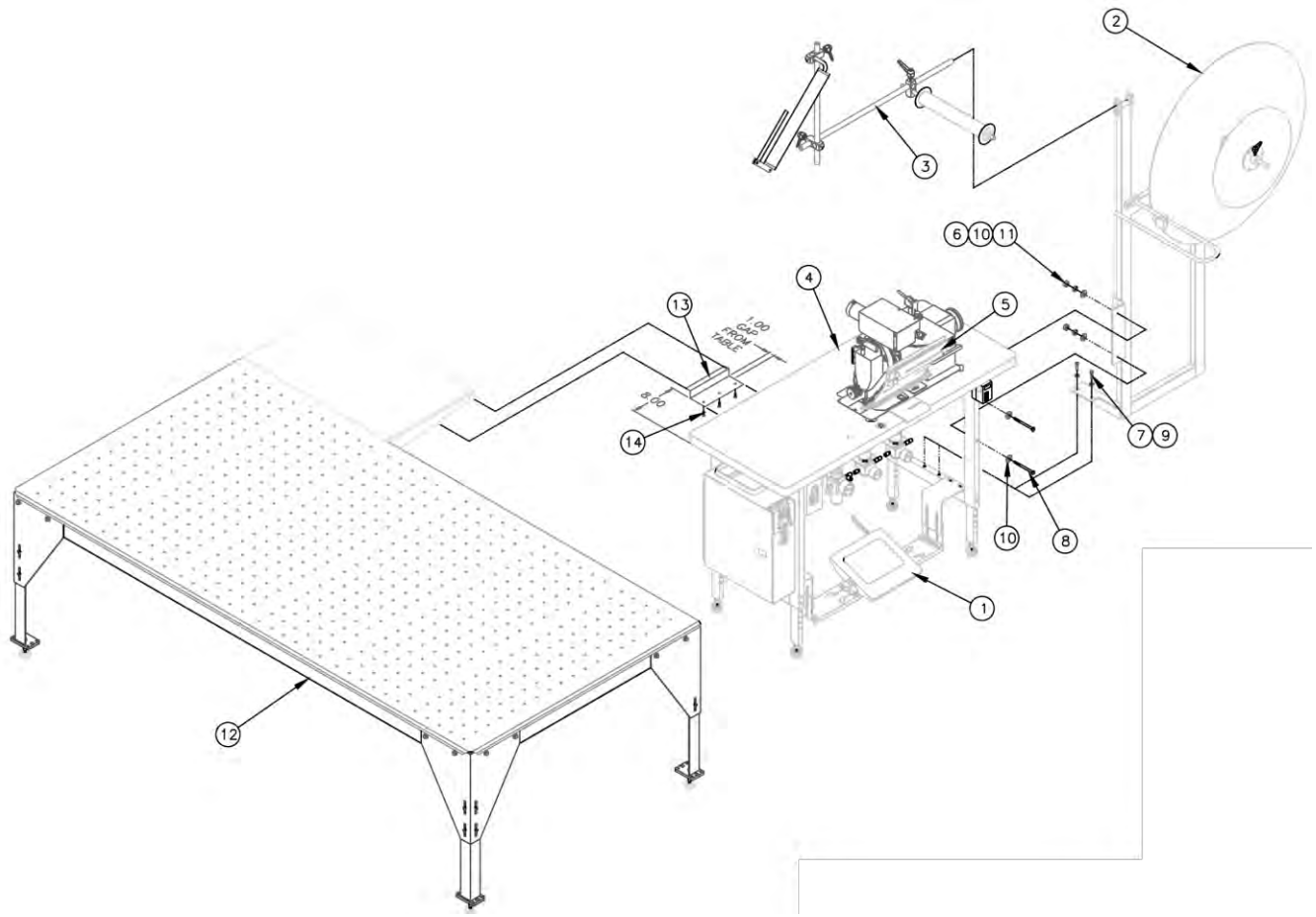

11335MA-SDAT Manual Pillowtop Ruffler

AAC Drawing Number 192881C Rev0

NO.	QTY	PART #	DESCRIPTION	
1	1	1335M-1005	Sit Down Treadle Assy	Page 81
2	1	1335M-4000A	Unwinder Assy	Page 73
3	1	1335M-430	Guide Roller Assy	Page 78
4	1	1335M-G	Generic Console	Page 47
5	1	A-2216K5/16	Flat Folder	Page 67
6	2	NNH3/8-16	Hex Nut	
7	2	SSHC01048	Screw, Hex Cap	
8	2	SSHC25192	Screw, Hex Cap	
9	2	WWFS1/4	Flat Washer	
10	4	WWFS3/8	Flat Washer	
11	2	WWL3/8	Lock Washer	
12	1	11337AT	Air Table Assy	Page 25
13	1	1335081	Shelf Support	
14	3	SSZH#10064	Screw, Sheet Metal	

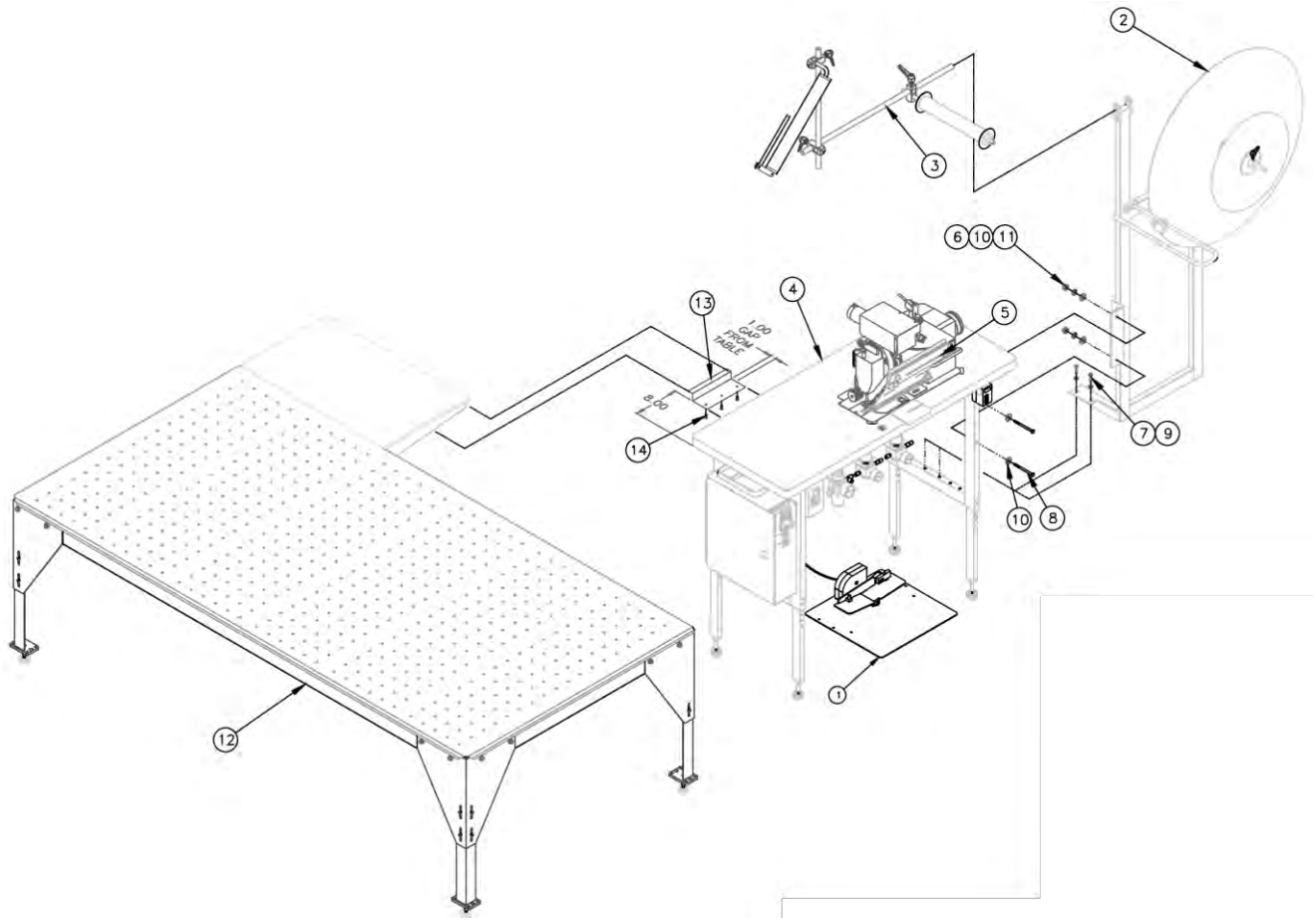

11335MA-SUAT Manual Pillowtop Ruffler

AAC Drawing Number 192882C Rev2

NO.	QTY	PART #	DESCRIPTION	
1	1	4059-FP301D	Foot Switch Assy	
2	1	1335M-4000A	Unwinder Assy	Page 73
3	1	1335M-430	Guide Roller Assy	Page 78
4	1	1335M-G	Generic Console	Page 47
5	1	A-2216K5/16	Flat Folder	Page 67
6	2	NNH3/8-16	Hex Nut	
7	2	SSHC01048	Screw, Hex Cap	
8	2	SSHC25192	Screw, Hex Cap	
9	2	WWFS1/4	Flat Washer	
10	4	WWFS3/8	Flat Washer	
11	2	WWL3/8	Lock Washer	
12	1	11337AT	Air Table Assy	Page 25
13	1	1335081	Shelf Support	
14	3	SSZH#10064	Screw, Sheet Metal	

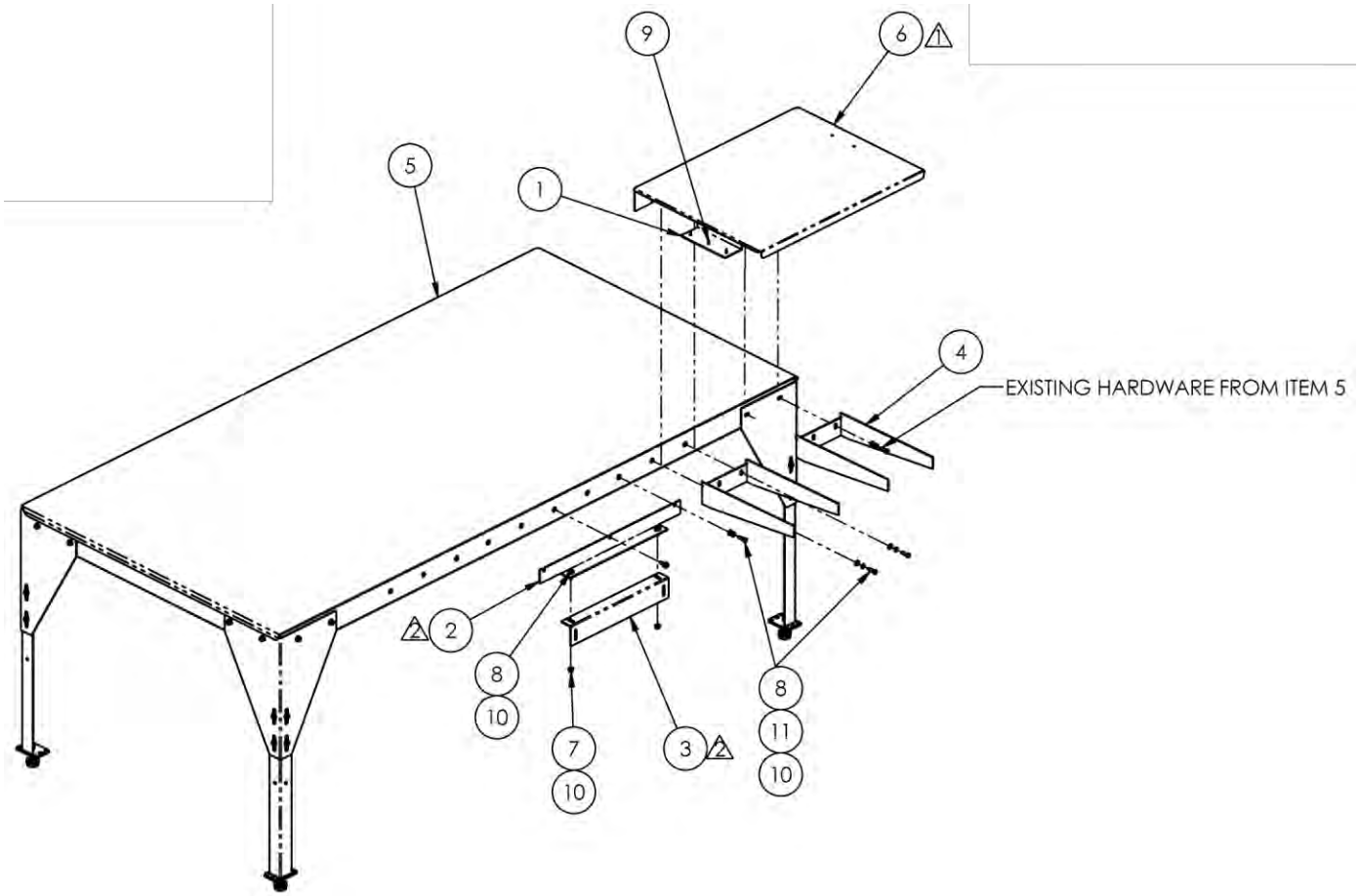

11337AT Air Table Assembly

AAC Drawing Number 9002611 Rev5

NO.	QTY	PART #	DESCRIPTION
1	1	1335081	SUPPORT, SHELF
2	AR	1337023	BRACKET, TABLE TOP RUFFLR
3	AR	1337024	MOUNT, AIR TABLE
4	2	1337A-0168B	BRACKET, RETAINER
5	1	1337A-160	AIR TABLE ASSY,SINGLE TBL
6	1	1337A-175C	SHELF, AIR TABLE,23"X30"
7	2	NNK5/16-18	KEP NUT, 5/16-18
8	6	SSHC10064	5/16-18 X 1" HEX HEAD
9	3	SSZH#10048	SCREW,SHT.METAL HEX 10
10	8	WWFS5/16	WASHER, FLAT, 5/16
11	4	WWL5/16	5/16 LW

Page 80

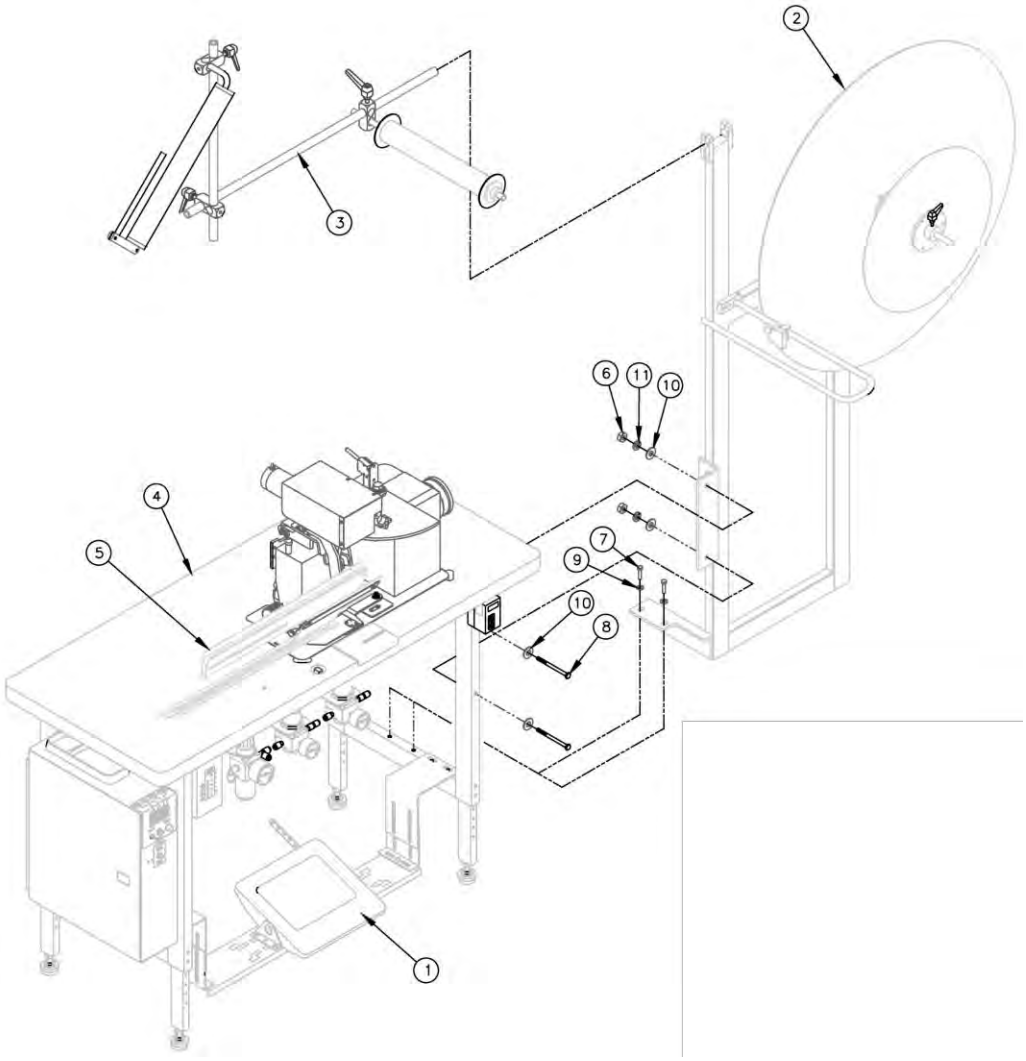

11335MA Manual Pillowtop Ruffler, with Flange, Flat Ruffle

AAC Drawing Number 192849C Rev1

NO.	QTY	PART #	DESCRIPTION	
1	1	1335M-1005	Sit Down Treadle Assy	Page 81
2	1	1335M-4000A	Unwinder Assy	Page 73
3	1	1335M-430	Guide Roller Assy	Page 78
4	1	1335M-G	Generic Console	Page 47
5	1	A-2216K5/16	Book Folder	Page 67
6	2	NNH3/8-16	Hex Nut	
7	2	SSHC01048	Screw, Hex Cap	
8	2	SSHC25192	Screw, Hex Cap	
9	2	WWFS1/4	Flat Washer	
10	4	WWFS3/8	Flat Washer	
11	2	WWL3/8	Lock Washer	

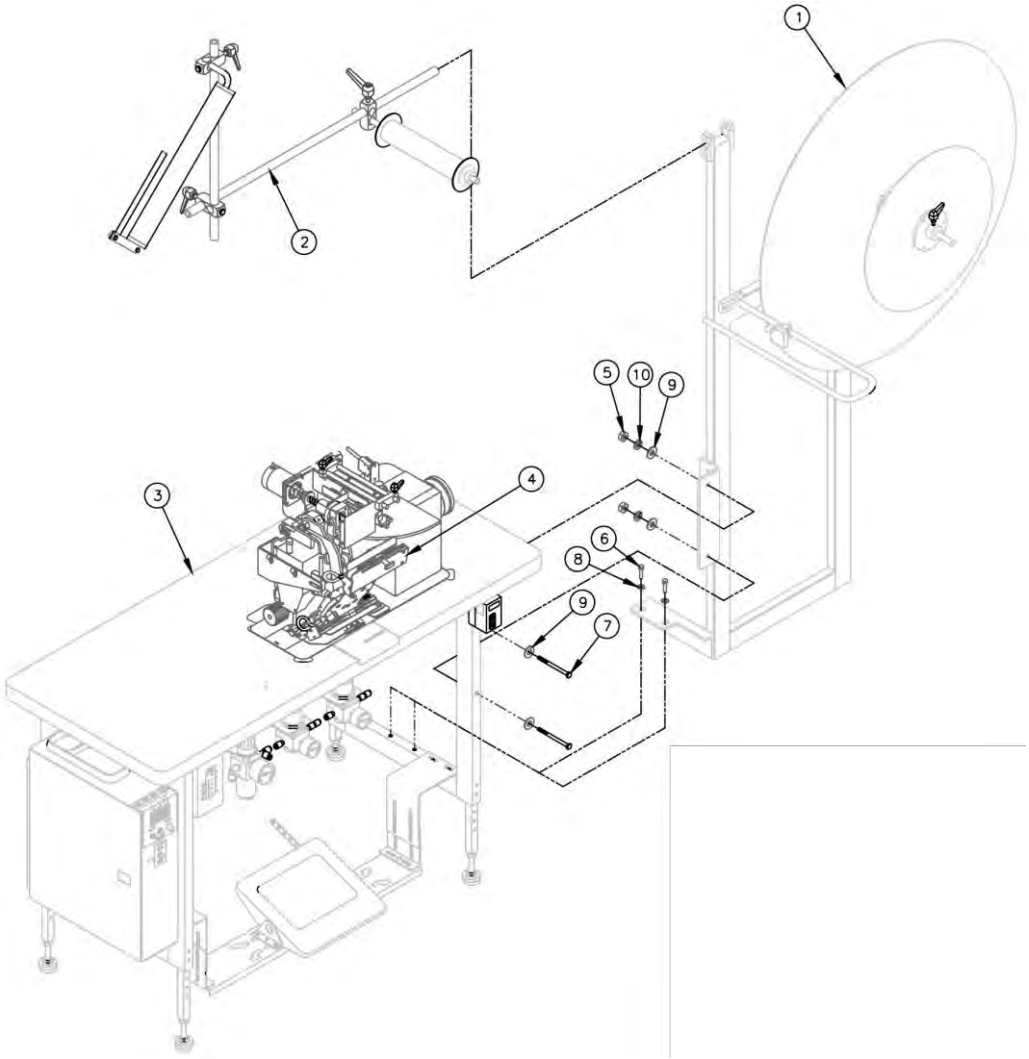

11335MB Manual Pillowtop Ruffler, W/Premade Folded Gusset

AAC Drawing Number 192756C Rev2

NO.	QTY	PARTS #	DESCRIPTION	
1	1	1335M-4000A	Unwinder Assy	Page 73
2	1	1335M-425	Guide Roller Assy	Page 77
3	1	1335M-G	Generic Console	Page 47
4	1	A-2216D1/2	Book Folder	Page 66
5	2	NNH3/8-16	Hex Nut	
6	2	SSHC01048	Screw, Hex Cap	
7	2	SSHC25192	Screw, Hex Cap	
8	2	WWFS1/4	Flat Washer	
9	4	WWFS3/8	Flat Washer	
10	2	WWL3/8	Lock Washer	

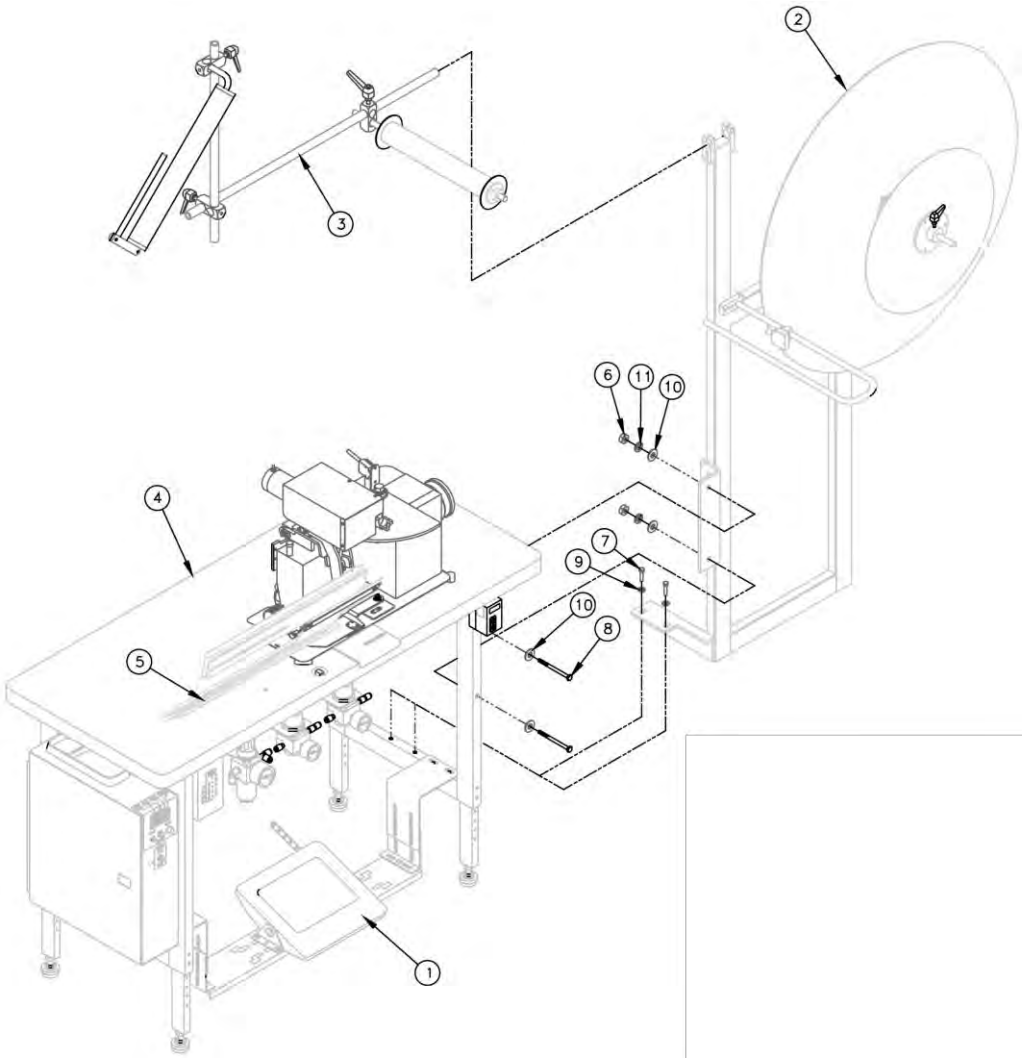

11335MC Continental Foundation Ruffler, 18”, No Flange

AAC Drawing Number 192820C Rev1

NO.	QTY	PART #	DESCRIPTION	
1	1	1335M-1005	Sit Down Treadle Assy	Page 81
2	1	1335M-4000A	Unwinder Assy	Page 73
3	1	1335M-430	Guide Roller Assy	Page 78
4	1	1335M-G	Generic Console	Page 47
5	1	A-2216M5/16	Book Folder	Page 69
6	2	NNH3/8-16	Hex Nut	
7	2	SSHC01048	Screw, Hex Cap	
8	2	SSHC25192	Screw, Hex Cap	
9	2	WWFS1/4	Flat Washer	
10	4	WWFS3/8	Flat Washer	
11	2	WWL3/8	Lock Washer	

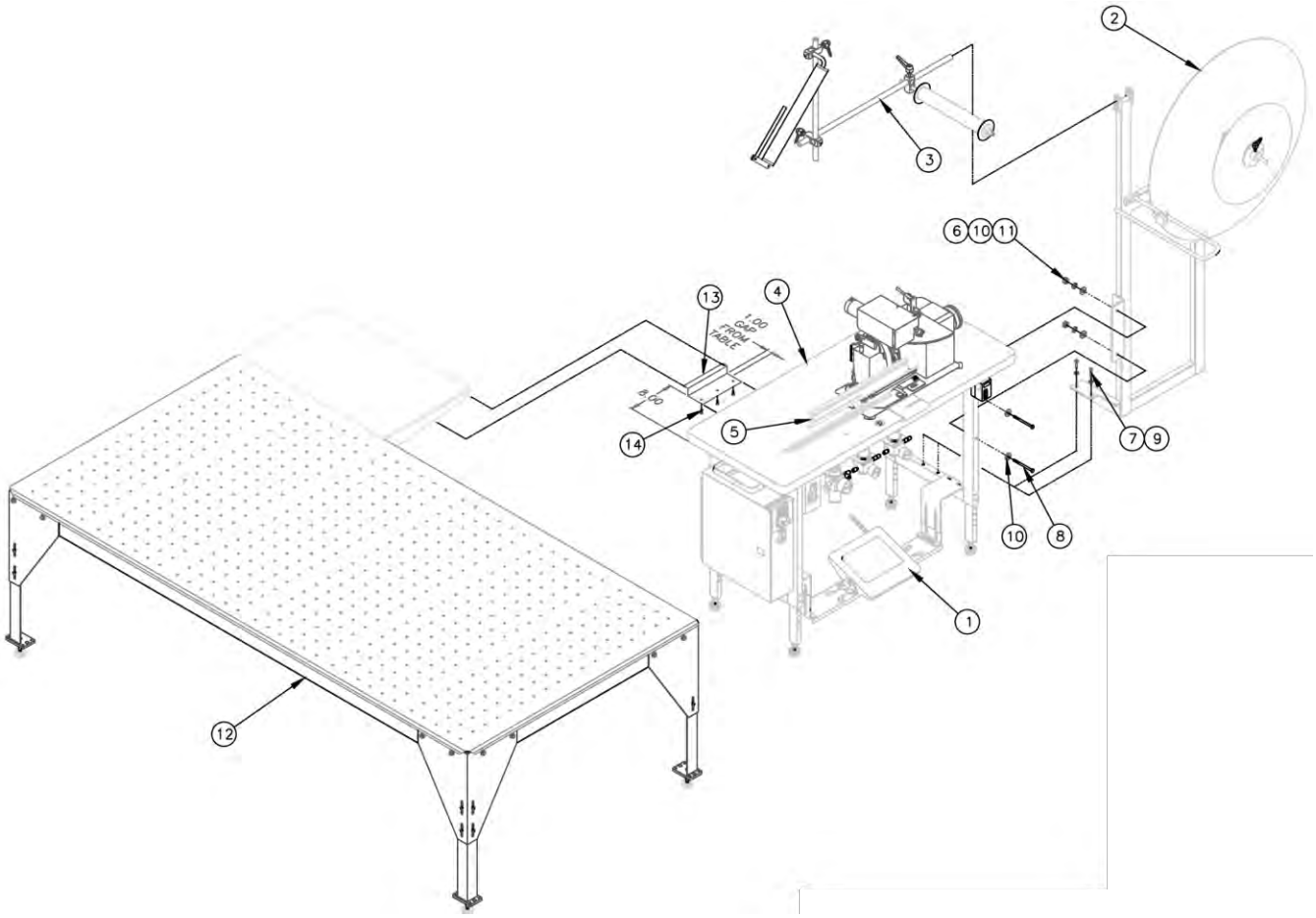

11335MC-SDAT Continental Foundation Ruffler, 18”

AAC Drawing Number 192883C Rev0

NO.	QTY	PART #	DESCRIPTION	
1	1	1335M-1005	Sit Down Treadle Assy	Page 81
2	1	1335M-4000A	Unwinder Assy	Page 73
3	1	1335M-430	Guide Roller Assy	Page 78
4	1	1335M-G	Generic Console	Page 47
5	1	A-2216G	Book Folder	
6	2	NNH3/8-16	Hex Nut	
7	2	SSHC01048	Screw, Hex Cap	
8	2	SSHC25192	Screw, Hex Cap	
9	2	WWFS1/4	Flat Washer	
10	4	WWFS3/8	Flat Washer	
11	2	WWL3/8	Lock Washer	
12	1	11337AT	Air Table Assy	Page 25
13	1	1335081	Shelf Support	
14	3	SSZH#10064	Screw, Sheet Metal	

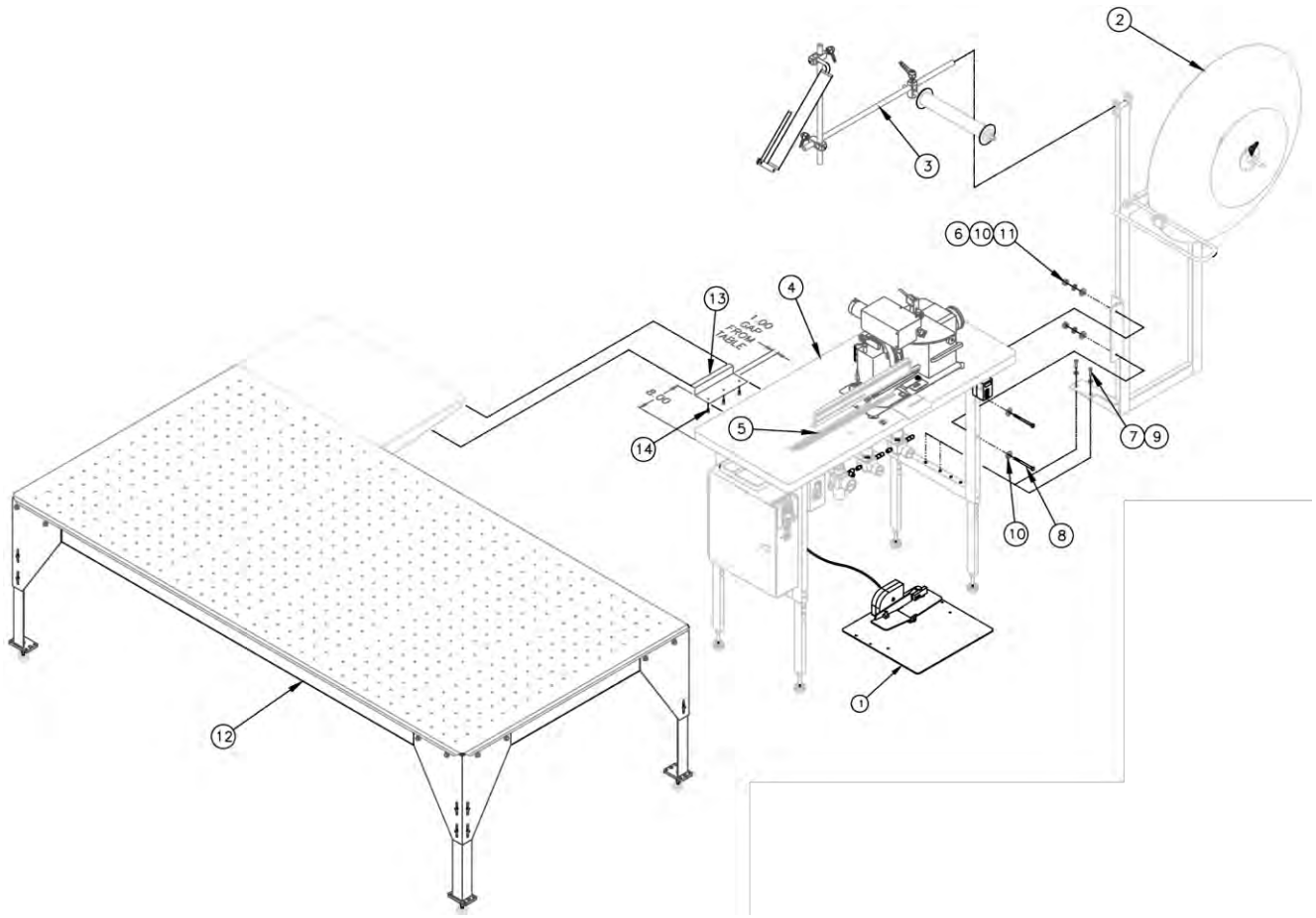

11335MC-SUAT Continental Foundation Ruffler, 18”

AAC Drawing Number 192884C Rev2

NO.	QTY	PART #	DESCRIPTION	
1	1	4059-FP301A	Foot Switch Assy	
2	1	1335M-4000A	Unwinder Assy	Page 73
3	1	1335M-430	Guide Roller Assy	Page 78
4	1	1335M-G	Generic Console	Page 47
5	1	A-2216M5/16	Flat Folder	Page 69
6	2	NNH3/8-16	Hex Nut	
7	2	SSHC01048	Screw, Hex Cap	
8	2	SSHC25192	Screw, Hex Cap	
9	2	WWFS1/4	Flat Washer	
10	4	WWFS3/8	Flat Washer	
11	2	WWL3/8	Lock Washer	
12	1	11337AT	Air Table Assy	Page 25
13	1	1335081	Shelf Support	
14	3	SSZH#10064	Screw, Sheet Metal	

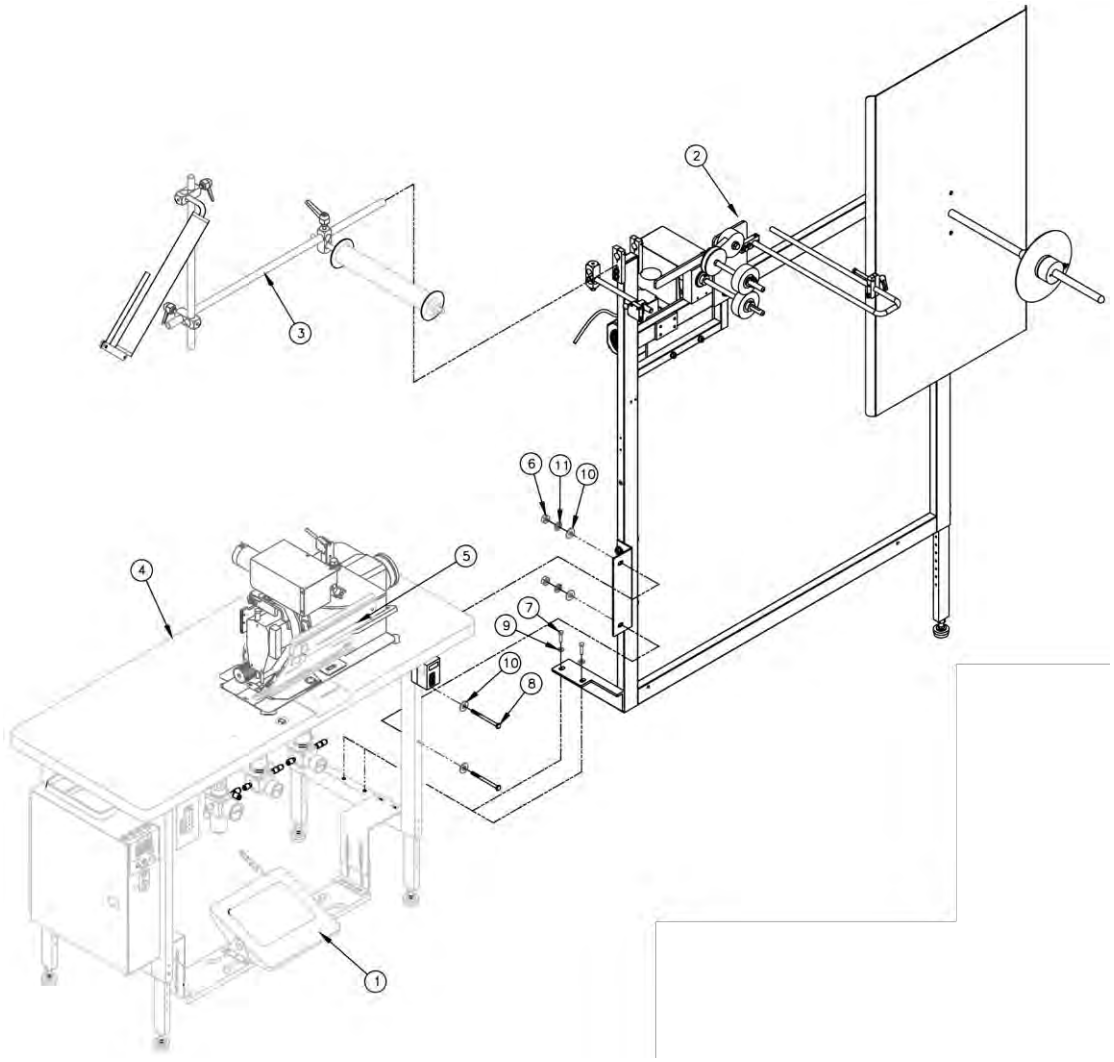

11335MDA Manual Pillowtop Ruffler

AAC Drawing Number 192885C Rev1

NO.	QTY	PART #	DESCRIPTION	
1	1	1335M-1005	Sit Down Treadle Assy	Page 81
2	1	1335105	Unwinder Assy	Page 71
3	1	1335M-430	Guide Roller Assy	Page 78
4	1	1335MD-G	Generic Console	Page 38
5	1	A-2216K5/16	Flat Folder	Page 67
6	2	NNH3/8-16	Hex Nut	
7	2	SSHC01048	Screw, Hex Cap	
8	2	SSHC25192	Screw, Hex Cap	
9	2	WWFS1/4	Flat Washer	
10	4	WWFS3/8	Flat Washer	
11	2	WWL3/8	Lock Washer	

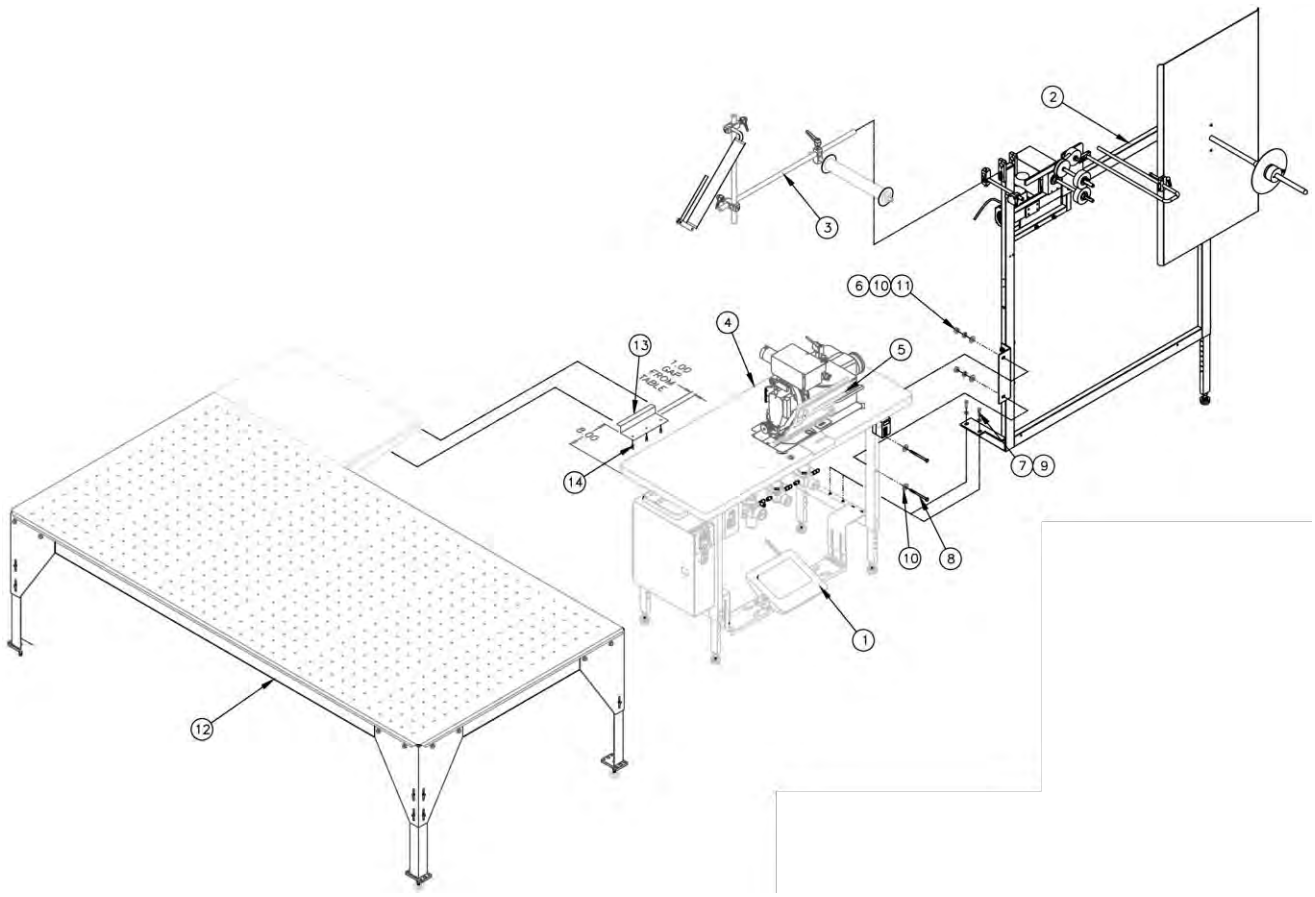

11335MDA-SDAT Manual Pillowtop Ruffler

AAC Drawing Number 192886C Rev1

NO.	QTY	PART #	DESCRIPTION	
1	1	1335M-1005	Sit Down Treadle Assy	Page 81
2	1	1335105	Unwinder Assy	Page 71
3	1	1335M-430	Guide Roller Assy	Page 78
4	1	1335MD-G	Generic Console	Page 38
5	1	A-2216K5/16	Flat Folder	Page 67
6	2	NNH3/8-16	Hex Nut	
7	2	SSHC01048	Screw, Hex Cap	
8	2	SSHC25192	Screw, Hex Cap	
9	2	WWFS1/4	Flat Washer	
10	4	WWFS3/8	Flat Washer	
11	2	WWL3/8	Lock Washer	
12	1	11337AT	Air Table Assy	Page 25
13	1	1335081	Shelf Support	
14	3	SSZH#10064	Screw, Sheet Metal	

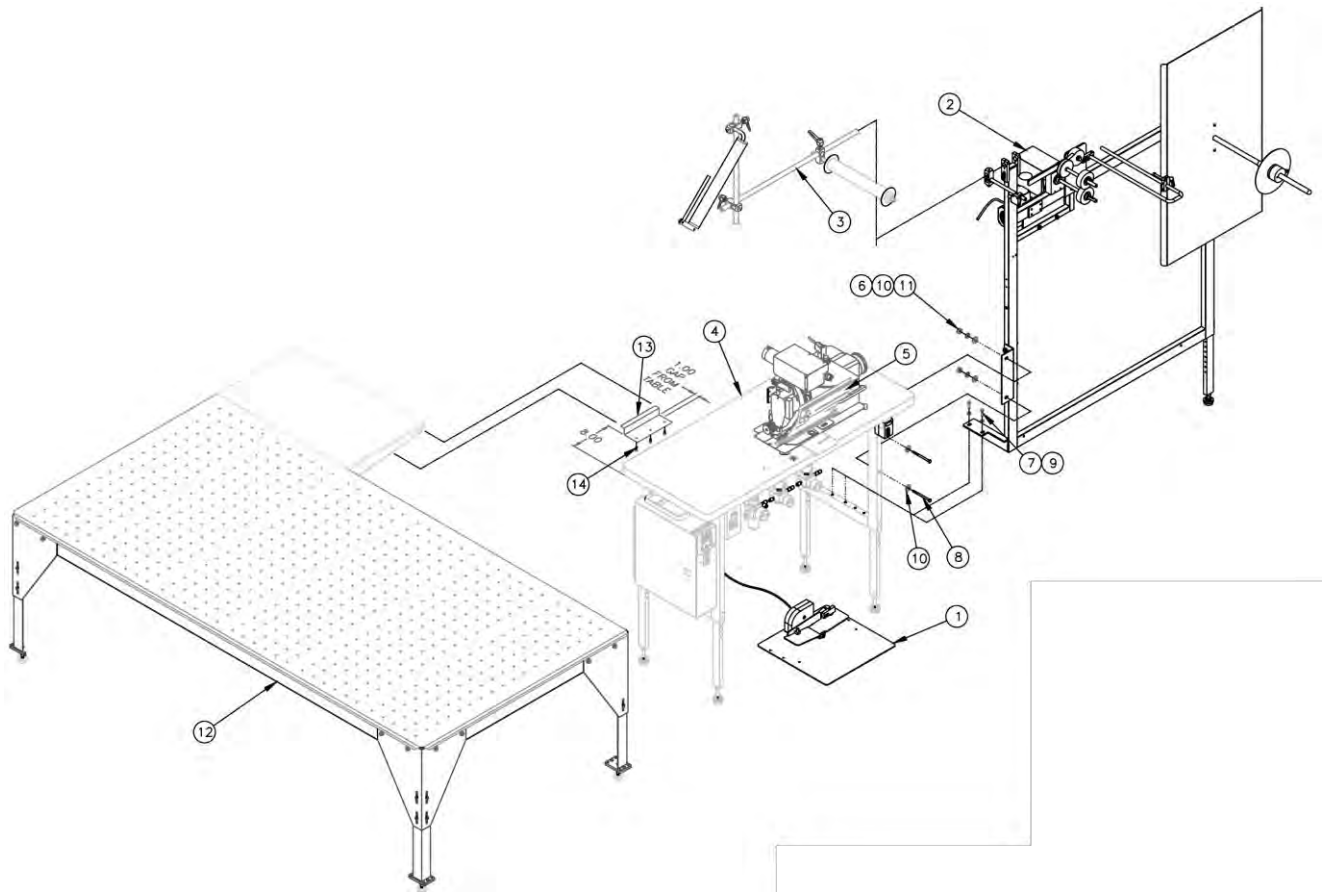

11335MDA-SUAT Manual Pillowtop Ruffler

AAC Drawing Number 192887C Rev2

NO.	QTY	PART #	DESCRIPTION	
1	1	4059-FP103D	Foot Switch Assy	
2	1	1335105	Unwinder Assy	Page 71
3	1	1335M-430	Guide Roller Assy	Page 78
4	1	1335MD-G	Generic Console	Page 38
5	1	A-2216K5/16	Flat Folder	Page 67
6	2	NNH3/8-16	Hex Nut	
7	2	SSHC01048	Screw, Hex Cap	
8	2	SSHC25192	Screw, Hex Cap	
9	2	WWFS1/4	Flat Washer	
10	4	WWFS3/8	Flat Washer	
11	2	WWL3/8	Lock Washer	
12	1	11337AT	Air Table Assy	Page 25
13	1	1335081	Shelf Support	
14	3	SSZH#10064	Screw, Sheet Metal	

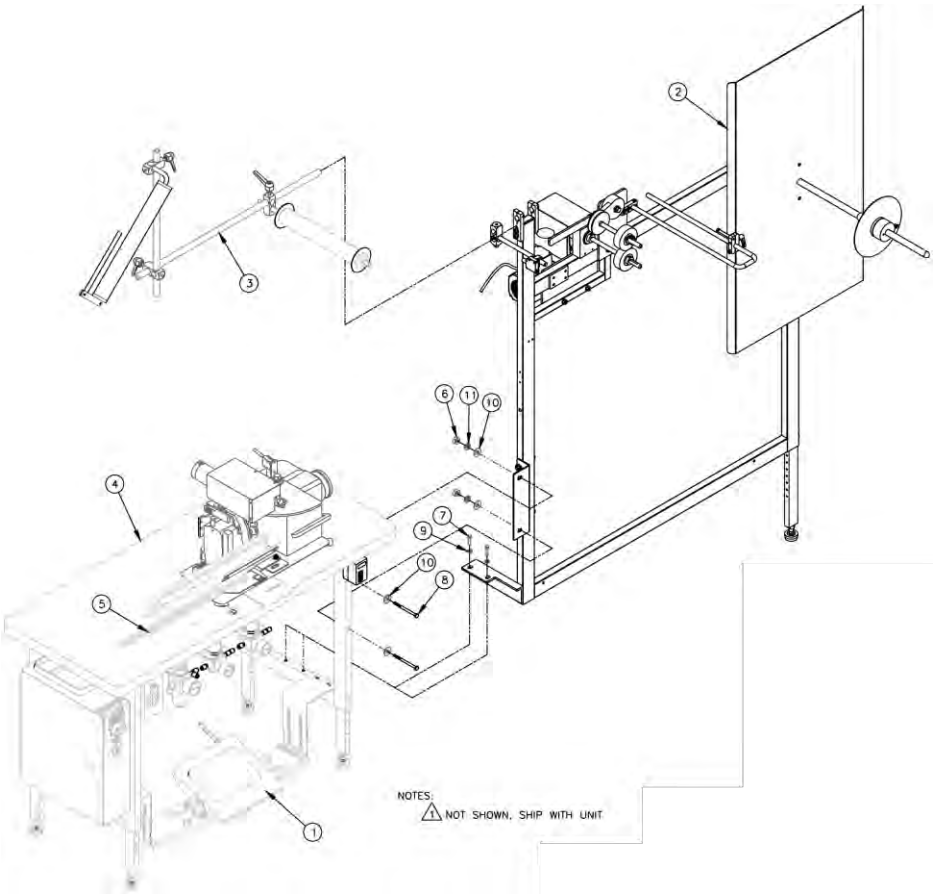

11335MDC Continental Foundation Ruffler, 16”

AAC Drawing Number 192888C Rev2

NO.	QTY	PART #	DESCRIPTION	
1	1	1335M-1005	Sit Down Treadle Assy	Page 81
2	1	1335105	Unwinder Assy	Page 71
3	1	1335M-430	Guide Roller Assy	Page 78
4	1	1335MD-G	Generic Console	Page 38
5	1	A-2216M5/16	Book Folder	Page 69
6	2	NNH3/8-16	Hex Nut	
7	2	SSHC01048	Screw, Hex Cap	
8	2	SSHC25192	Screw, Hex Cap	
9	2	WWFS1/4	Flat Washer	
10	4	WWFS3/8	Flat Washer	
11	2	WWL3/8	Lock Washer	
12	1	1335M-2002E	Ruffler Blade	

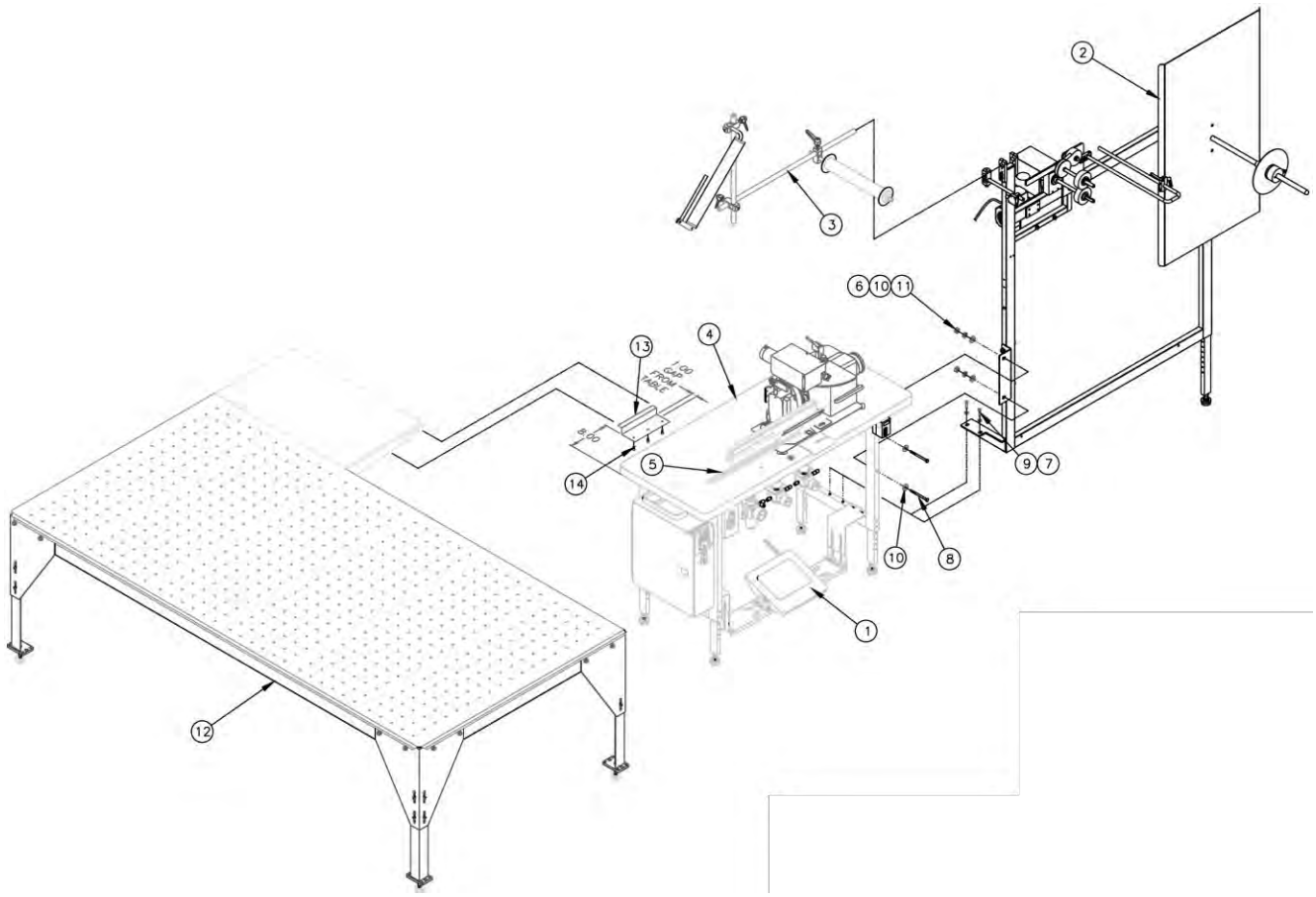

11335MDC-SDAT Continental Foundation Ruffler, 16”

AAC Drawing Number 192889C Rev1

NO.	QTY	PART #	DESCRIPTION	
1	1	1335M-1005	Sit Down Treadle Assy	Page 81
2	1	1335105	Unwinder Assy	Page 71
3	1	1335M-430	Guide Roller Assy	Page 78
4	1	1335M-G	Generic Console	Page 47
5	1	A-2216M 5/16	Book Folder	Page 69
6	2	NNH3/8-16	Hex Nut	
7	2	SSHC01048	Screw, Hex Cap	
8	2	SSHC25192	Screw, Hex Cap	
9	2	WWFS1/4	Flat Washer	
10	4	WWFS3/8	Flat Washer	
11	2	WWL3/8	Lock Washer	
12	1	11337AT	Air Table Assy	Page 25
13	1	1335081	Shelf Support	
14	3	SSZH#10064	Screw, Sheet Metal	

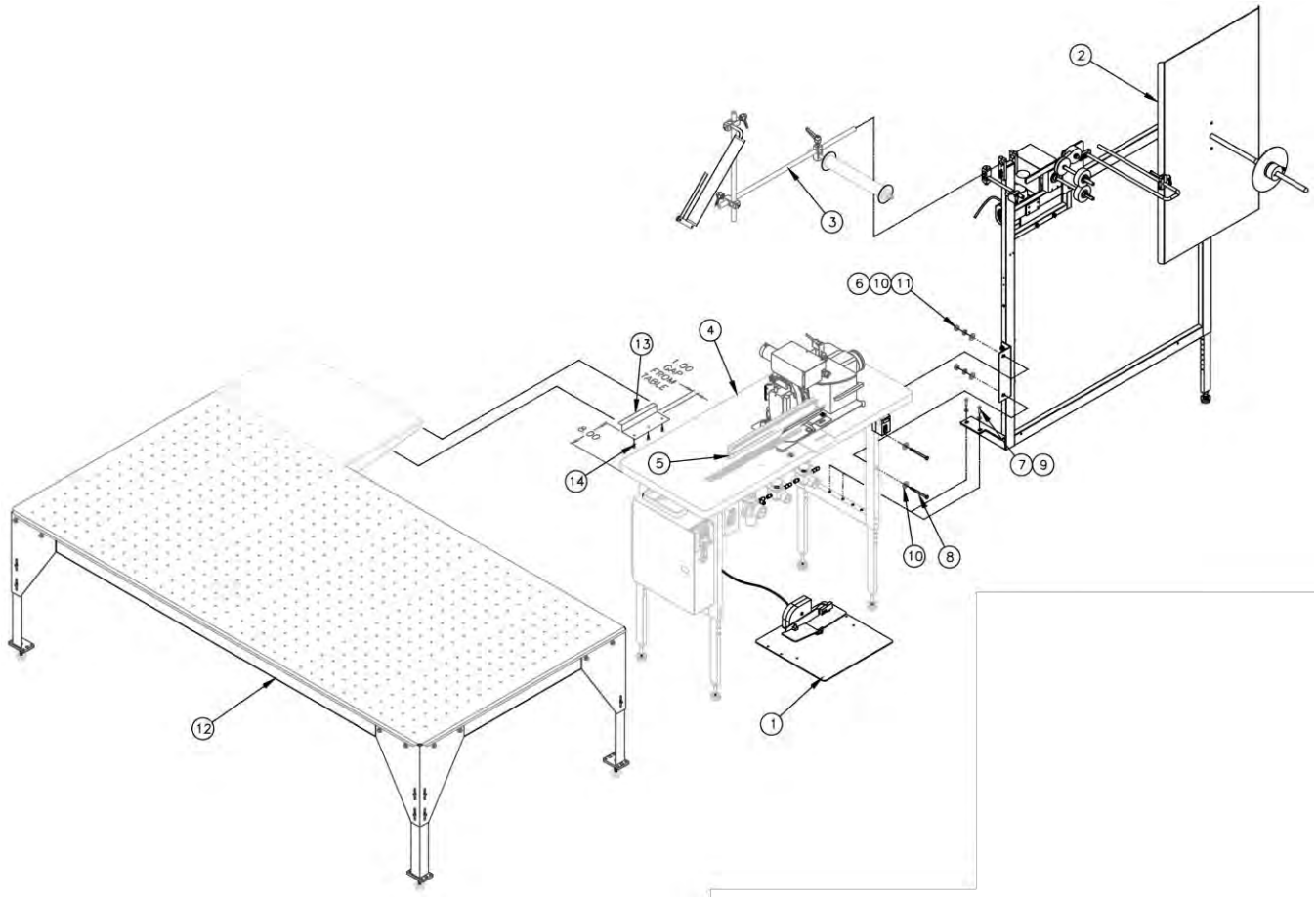

11335MDC-SUAT Continental Foundation Ruffler, 16”

AAC Drawing Number 192890C Rev2

NO.	QTY	PART #	DESCRIPTION	
1	1	1278-6160E	Foot Switch Assy	
2	1	1335105	Unwinder Assy	Page 71
3	1	1335M-430	Guide Roller Assy	Page 78
4	1	1335M-G	Generic Console	Page 47
5	1	A-2216M 5/16	Book Folder	Page 69
6	2	NNH3/8-16	Hex Nut	
7	2	SSHC01048	Screw, Hex Cap	
8	2	SSHC25192	Screw, Hex Cap	
9	2	WWFS1/4	Flat Washer	
10	4	WWFS3/8	Flat Washer	
11	2	WWL3/8	Lock Washer	
12	1	11337AT	Air Table Assy	Page 25
13	1	1335081	Shelf Support	
14	3	SSZH#10064	Screw, Sheet Metal	

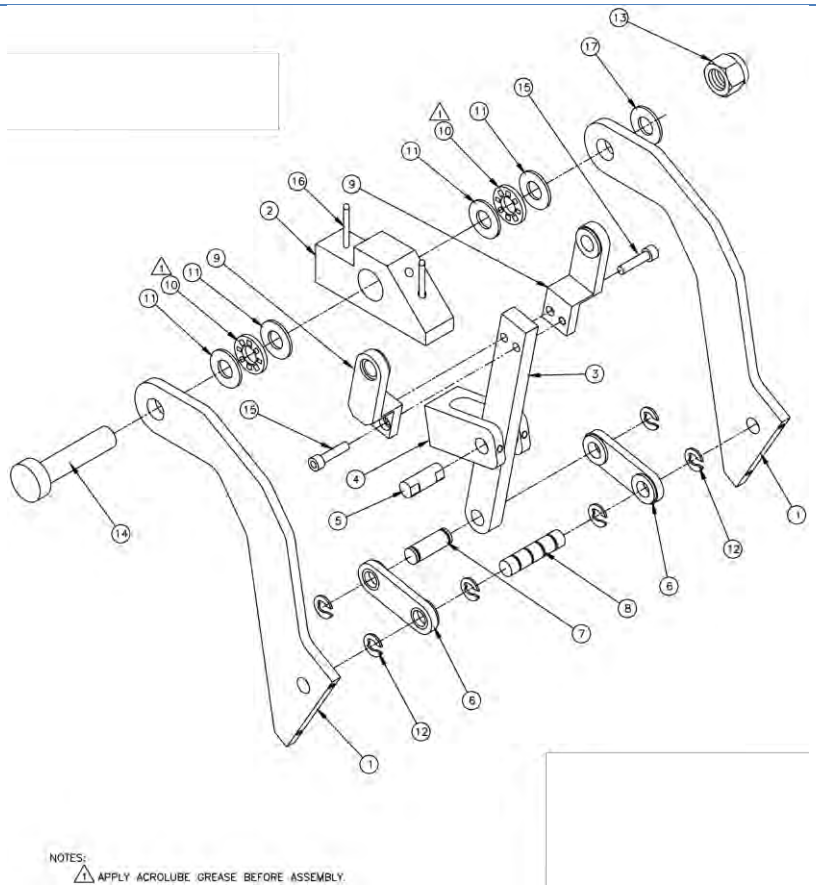

1335M-2300 Pivot Assembly

AAC Drawing Number 192731C Rev3

NO.	QTY	PART #	DESCRIPTION
1	2	1335M-2004	Pivot Arm
2	1	1335M-2007	Pivot Block
3	1	1335M-2009	Drive Link
4	1	1335M-2010	Pivot Block
5	1	1335M-2011	Pivot Shaft
6	2	1335M-2012	Side Link
7	1	1335M-2013	Link Shaft
8	1	1335M-2014	Link Shaft
9	2	1335M-2015	Link Yoke
10	2	BBNTA815	Thrust Bearing
11	4	BBTRA815	Thrust Washer
12	6	MM8407A134	E-Ring
13	1	NNE3/8-16	Elastic Lock Nut
14	1	SSAS032096	Socket Shoulder Screw
15	2	SSSC98048	Screw, Socket Cap
16	2	IIS012X064	Spring Pin
17	1	WWFS3/8	Flat Washer

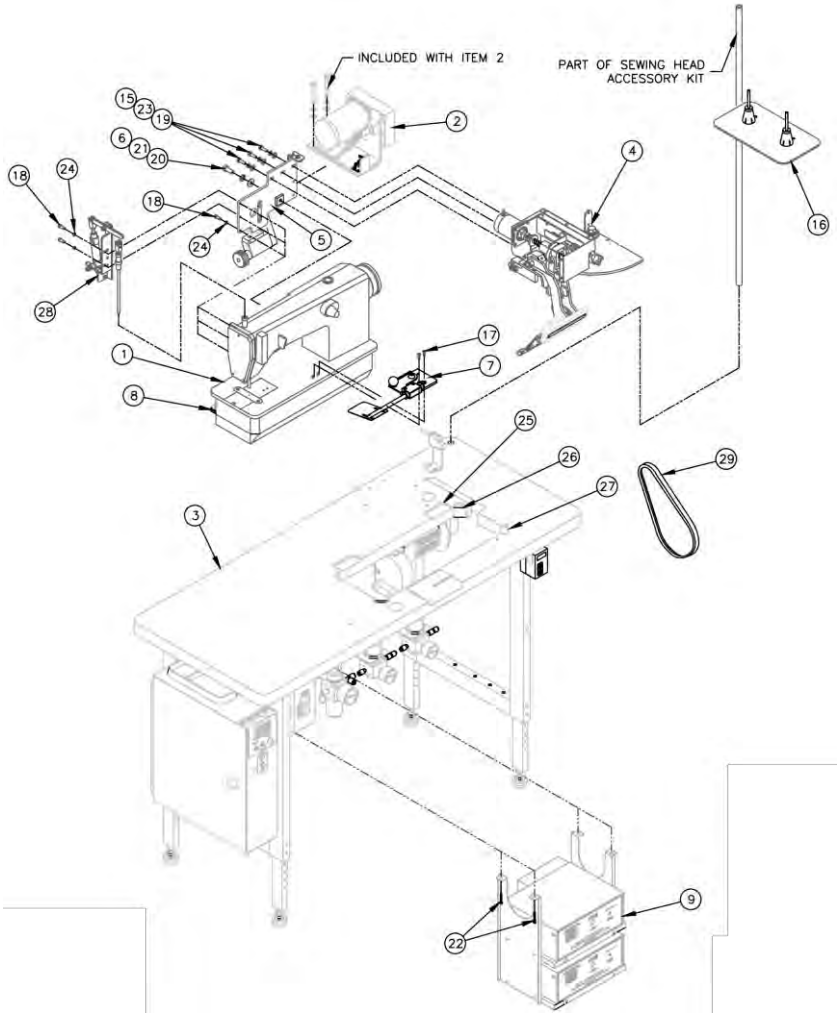

1335MD-G Generic Console

AAC Drawing Number 192865C Rev5

	NO.	QTY	PART #	DESCRIPTION	NO.	QTY	PART #	DESCRIPTION	
Page 89	1	1	1335MD-10	Sew Head Assy	16	1	1959-112	Thread Plate Assy	
Page 49	2	1	1335M-120	Puller Drive Assy	17	2	SSBC98032	Screw, Button Cap	
Page 51	3	1	1335M-1000	Stand & Motor	18	3	SSSC98040	Screw, Socket Cap	
Page 55	4	1	1335M-2000A	Ruffler Assy	19	3	SSHC01048	Screw, Hex Cap	
Page 57	5	1	1335M-3000A	Puller Assy	20	1	SSHC20064	Screw, Hex Cap	
	6	1	WWFS5/16	Flat Washer	21	1	WWL5/16	Lock Washer	
Page 61	7	1	1335183	Stripper Blade Assy	22	4	SSZH#10048	Screw, Sheet Metal	
Page 60	8	1	1335MD-6000	Footlift Assy	23	3	WWL1/4	Lock Washer	
Page 62	9	1	1335M-9500	Stepper Box Assy	24	3	WWL10	Lock Washer	
	10	AR	1335M-LAB	Labels	25	2	MMF01E0418	Hinge, Cushion	
Page 17	11	1	1335M-PAR	Parameter List	26	2	MMF01A0419	Vibration Pad, Large	
Page 94	12	AR	1335M-PD	Pneumatic Diagram	27	2	MMF01A1419	Vibration Pad, Small	
Page 98	13	AR	1335M-WD	Wiring Diagram	28	1	1335M-113	Foot Pressure Assy	Page 88
	15	3	WWFS1/4	Flat Washer	29	1	ZX3840	V-Belt	

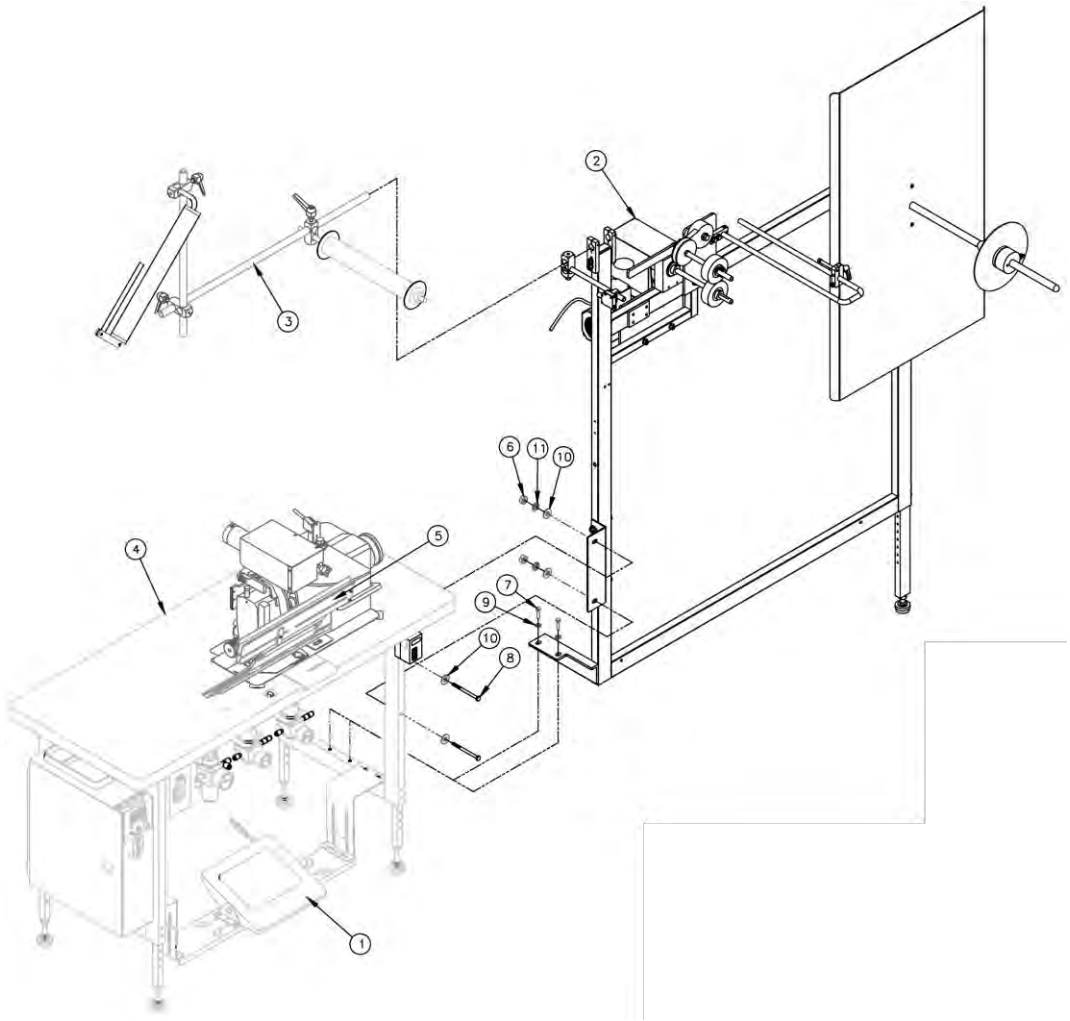

11335MDE Euro Top Ruffler, 9”

AAC Drawing Number 192891C Rev1

NO.	QTY	PART #	DESCRIPTION	
1	1	1335M-1005	Sit Down Treadle Assy	Page 81
2	1	1335105	Unwinder Assy	Page 71
3	1	1335M-430	Guide Roller Assy	Page 78
4	1	1335MD-G	Generic Console	Page 38
5	1	A-2216L5/16	Flat Folder	Page 68
6	2	NNH3/8-16	Hex Nut	
7	2	SSHC01048	Screw, Hex Cap	
8	2	SSHC25192	Screw, Hex Cap	
9	2	WWFS1/4	Flat Washer	
10	4	WWFS3/8	Flat Washer	
11	2	WWL3/8	Lock Washer	

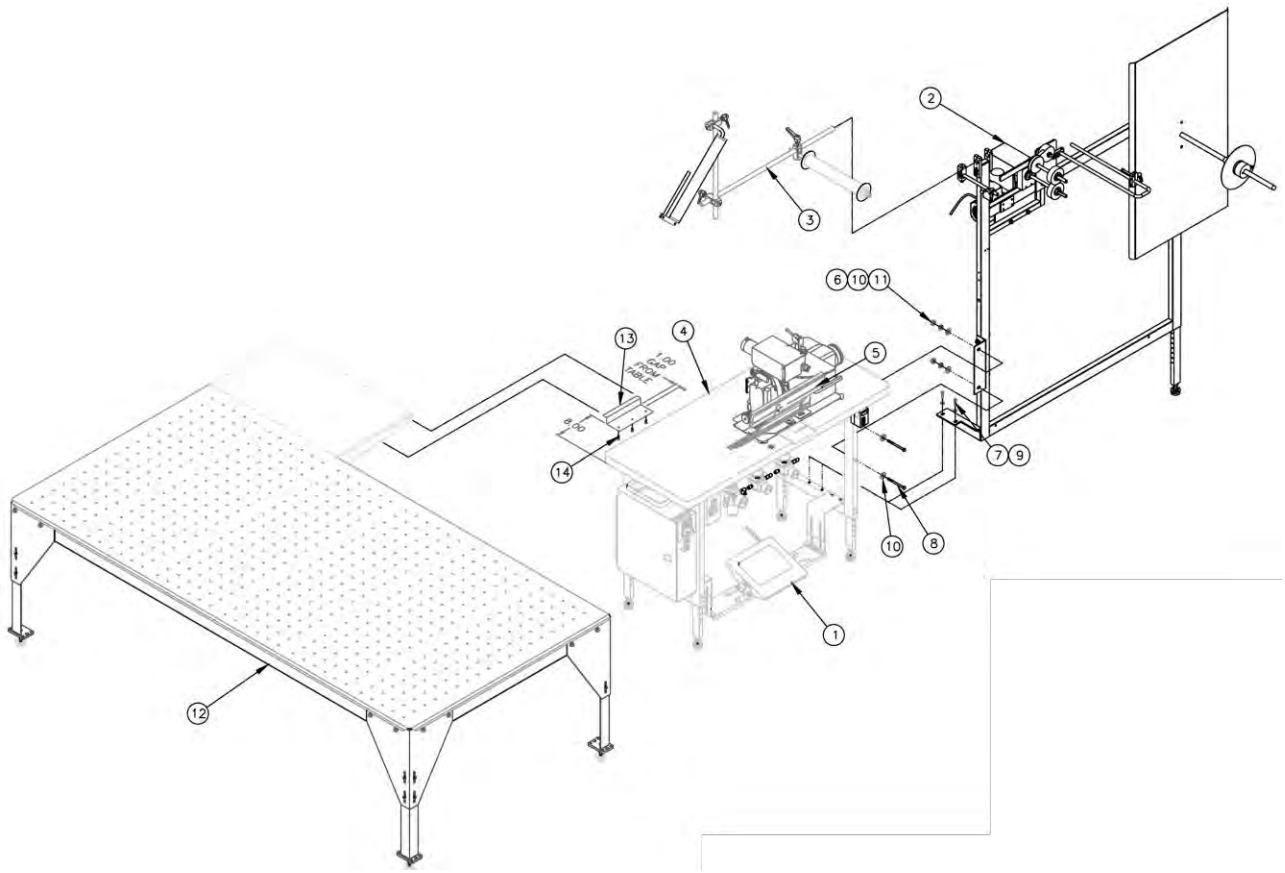

11335MDE-SDAT Euro Top Ruffler, 9”

AAC Drawing Number 192892C Rev1

NO.	QTY	PART #	DESCRIPTION	
1	1	1335M-1005	Sit Down Treadle Assy	Page 81
2	1	1335105	Unwinder Assy	Page 71
3	1	1335M-430	Guide Roller Assy	Page 78
4	1	1335MD-G	Generic Console	Page 38
5	1	A-2216L5/16	Flat Folder	Page 68
6	2	NNH3/8-16	Hex Nut	
7	2	SSHC01048	Screw, Hex Cap	
8	2	SSHC25192	Screw, Hex Cap	
9	2	WWFS1/4	Flat Washer	
10	4	WWFS3/8	Flat Washer	
11	2	WWL3/8	Lock Washer	
12	1	11337AT	Air Table Assy	Page 25
13	1	1335081	Shelf Support	
14	3	SSZH#10064	Screw, Sheet Metal	

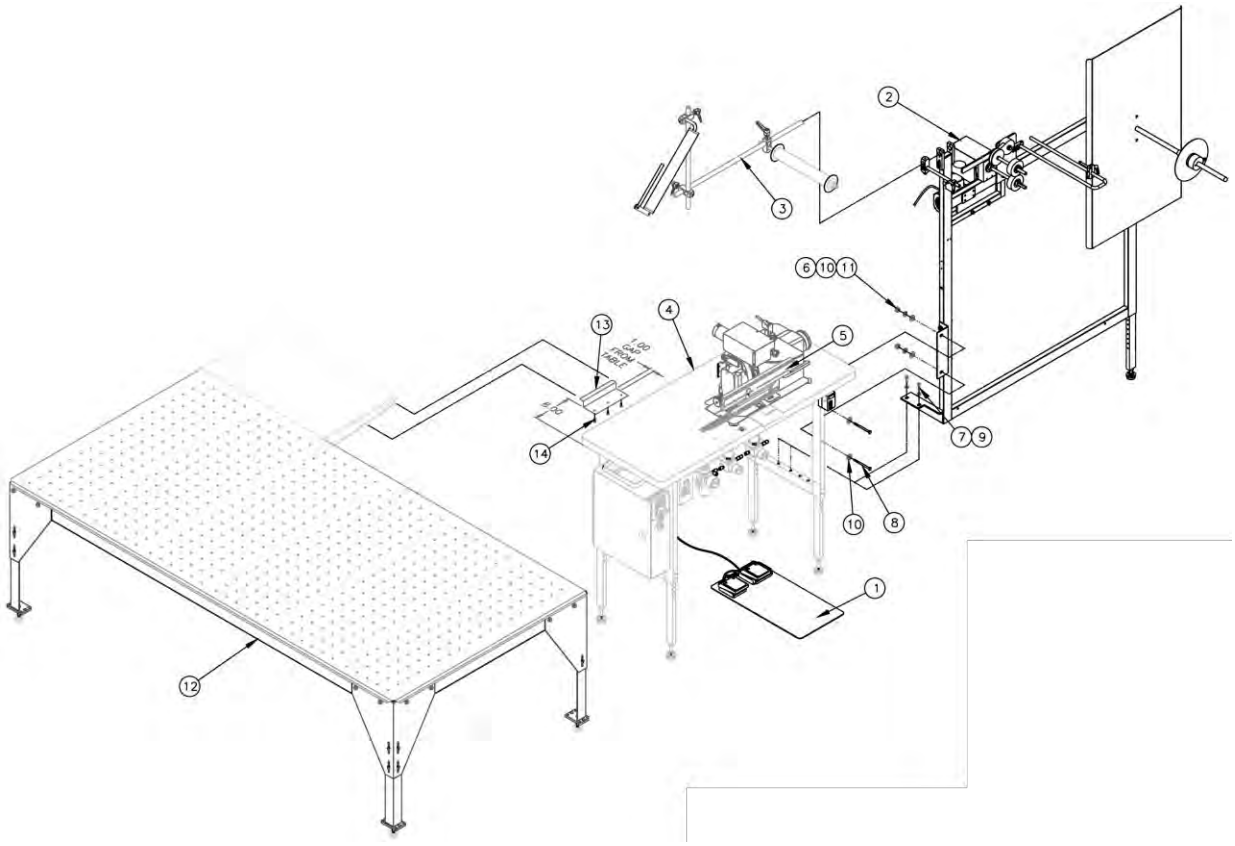

11335MDE-SUAT Euro Top Ruffler, 9”

AAC Drawing Number 192893C Rev1

NO.	QTY	PART #	DESCRIPTION	
1	1	1278-6160E	Foot Switch Assy	
2	1	1335105	Unwinder Assy	Page 71
3	1	1335M-430	Guide Roller Assy	Page 78
4	1	1335M-G	Generic Console	Page 47
5	1	A-2216L5/16	Flat Folder	Page 68
6	2	NNH3/8-16	Hex Nut	
7	2	SSHC01048	Screw, Hex Cap	
8	2	SSHC25192	Screw, Hex Cap	
9	2	WWFS1/4	Flat Washer	
10	4	WWFS3/8	Flat Washer	
11	2	WWL3/8	Lock Washer	
12	1	11337AT	Air Table Assy	Page 25
13	1	1335081	Shelf Support	
14	3	SSZH#10064	Screw, Sheet Metal	

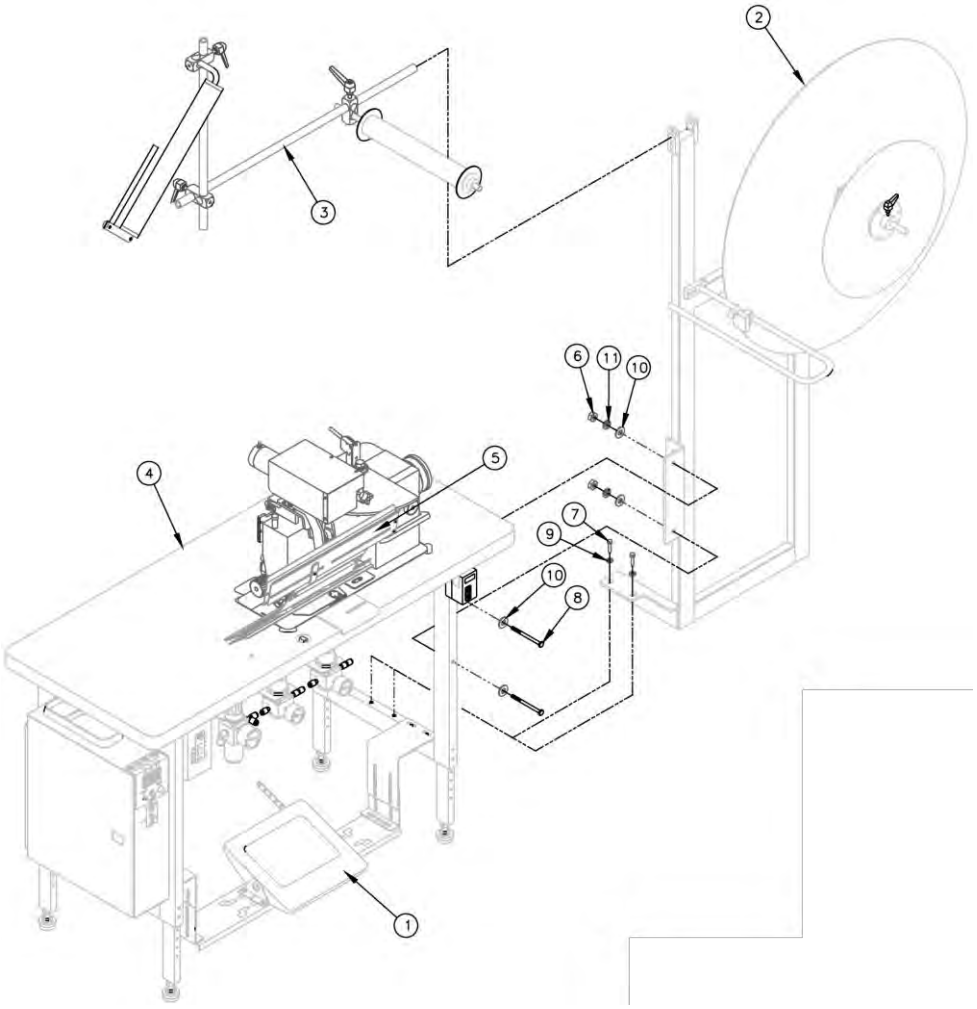

11335ME Euro Top Ruffler, 9”

AAC Drawing Number 192894C Rev0

NO.	QTY	PART #	DESCRIPTION	
1	1	1335M-1005	Sit Down Treadle Assy	Page 81
2	1	1335M-4000A	Unwinder Assy	Page 73
3	1	1335M-430	Guide Roller Assy	Page 78
4	1	1335M-G	Generic Console	Page 47
5	1	A-2216L5/16	Flat Folder	Page 68
6	2	NNH3/8-16	Hex Nut	
7	2	SSHC01048	Screw, Hex Cap	
8	2	SSHC25192	Screw, Hex Cap	
9	2	WWFS1/4	Flat Washer	
10	4	WWFS3/8	Flat Washer	
11	2	WWL3/8	Lock Washer	

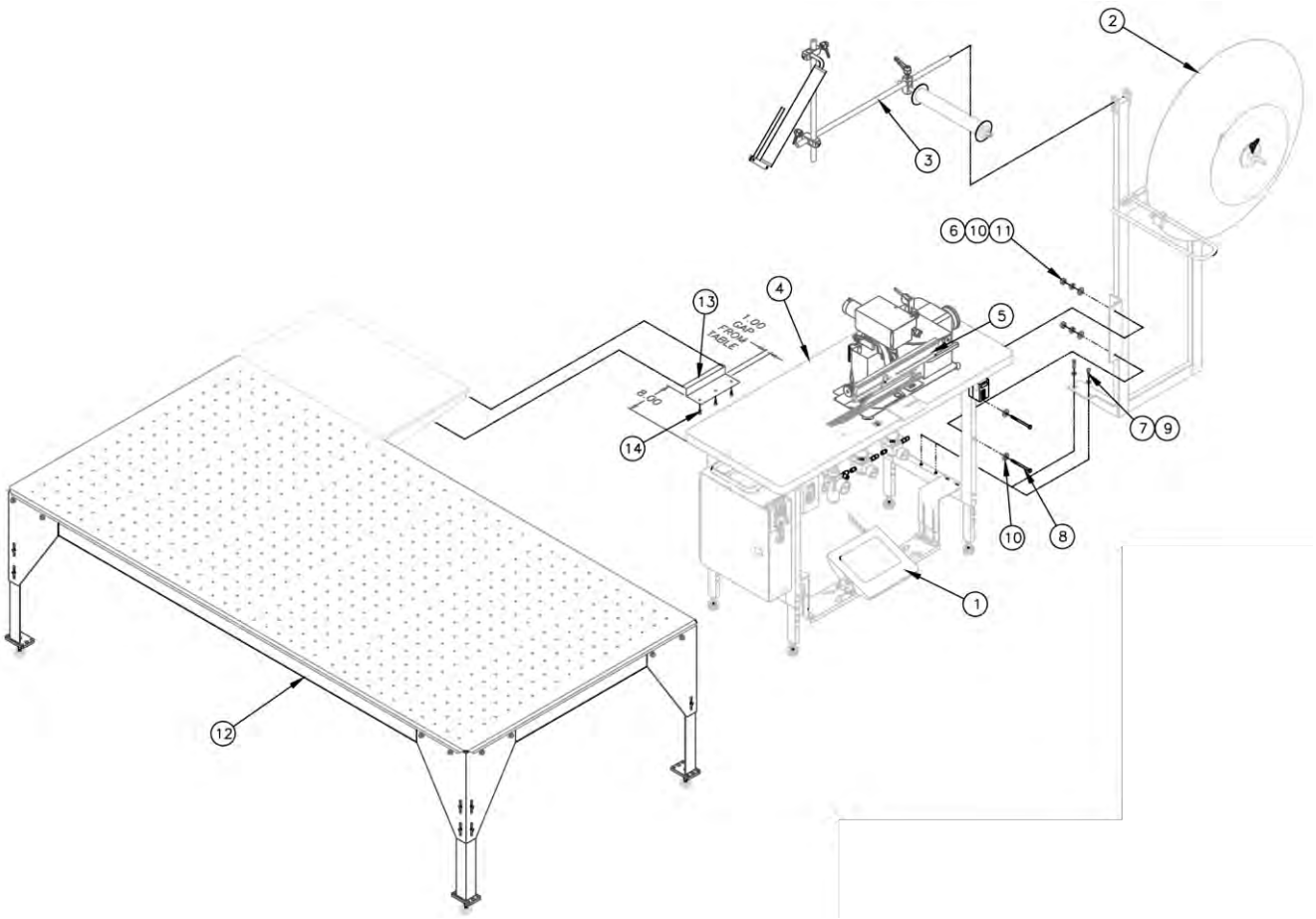

11335ME-SDAT Euro Top Ruffler, 9”

AAC Drawing Number 192895C Rev0

NO.	QTY	PART #	DESCRIPTION	
1	1	1335M-1005	Sit Down Treadle Assy	Page 81
2	1	1335M-4000A	Unwinder Assy	Page 73
3	1	1335M-430	Guide Roller Assy	Page 78
4	1	1335M-G	Generic Console	Page 47
5	1	A-2216L5/16	Flat Folder	Page 68
6	2	NNH3/8-16	Hex Nut	
7	2	SSHC01048	Screw, Hex Cap	
8	2	SSHC25192	Screw, Hex Cap	
9	2	WWFS1/4	Flat Washer	
10	4	WWFS3/8	Flat Washer	
11	2	WWL3/8	Lock Washer	
12	1	11337AT	Air Table Assy	Page 25
13	1	1335081	Shelf Support	
14	3	SSZH#10064	Screw, Sheet Metal	

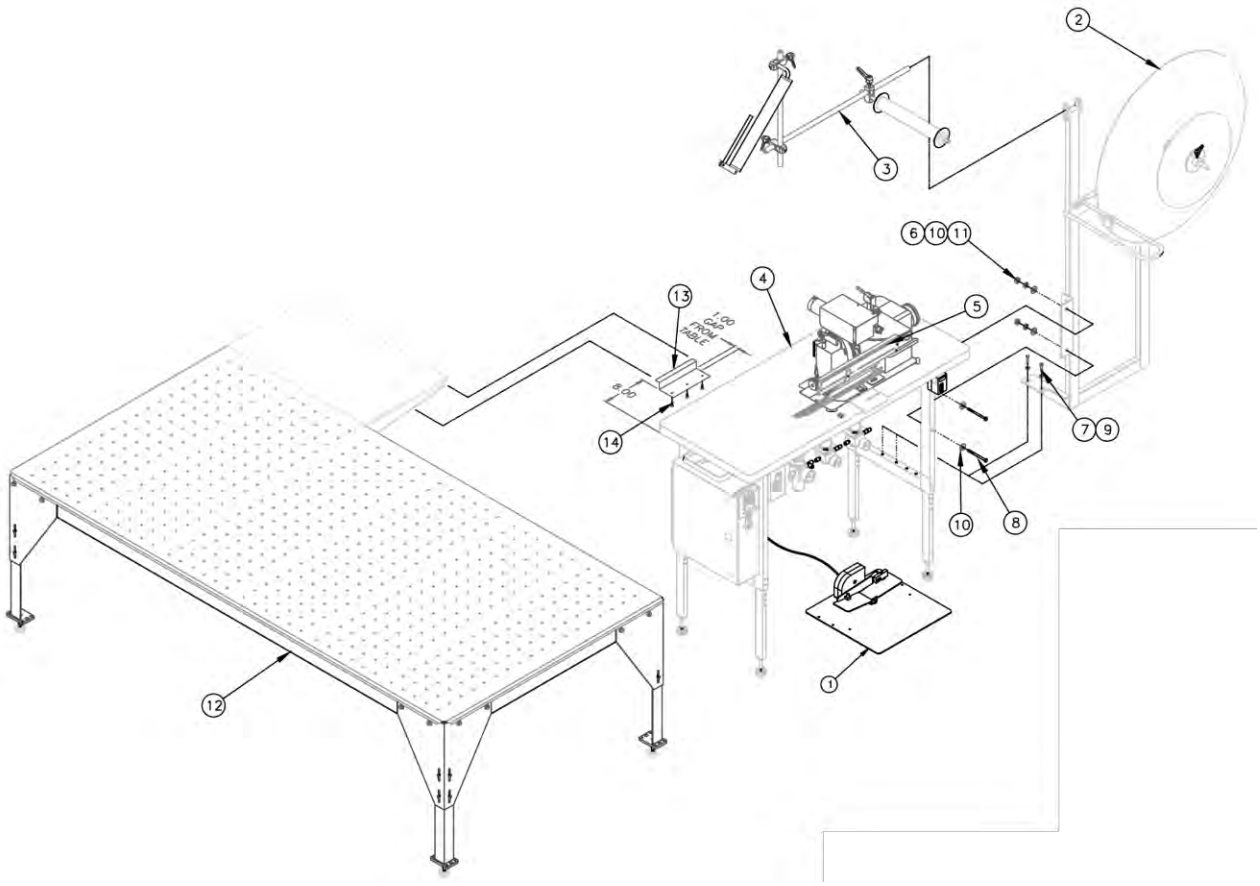

11335ME-SUAT Euro Top Ruffler, 9”

AAC Drawing Number 192896C Rev2

NO.	QTY	PART #	DESCRIPTION	
1	1	4059-FP301D	Foot Switch Assy	
2	1	1335M-4000A	Unwinder Assy	Page 73
3	1	1335M-430	Guide Roller Assy	Page 78
4	1	1335M-G	Generic Console	Page 47
5	1	A-2216L5/16	Flat Folder	Page 68
6	2	NNH3/8-16	Hex Nut	
7	2	SSHC01048	Screw, Hex Cap	
8	2	SSHC25192	Screw, Hex Cap	
9	2	WWFS1/4	Flat Washer	
10	4	WWFS3/8	Flat Washer	
11	2	WWL3/8	Lock Washer	
12	1	11337AT	Air Table Assy	Page 25
13	1	1335081	Shelf Support	
14	3	SSZH#10064	Screw, Sheet Metal	

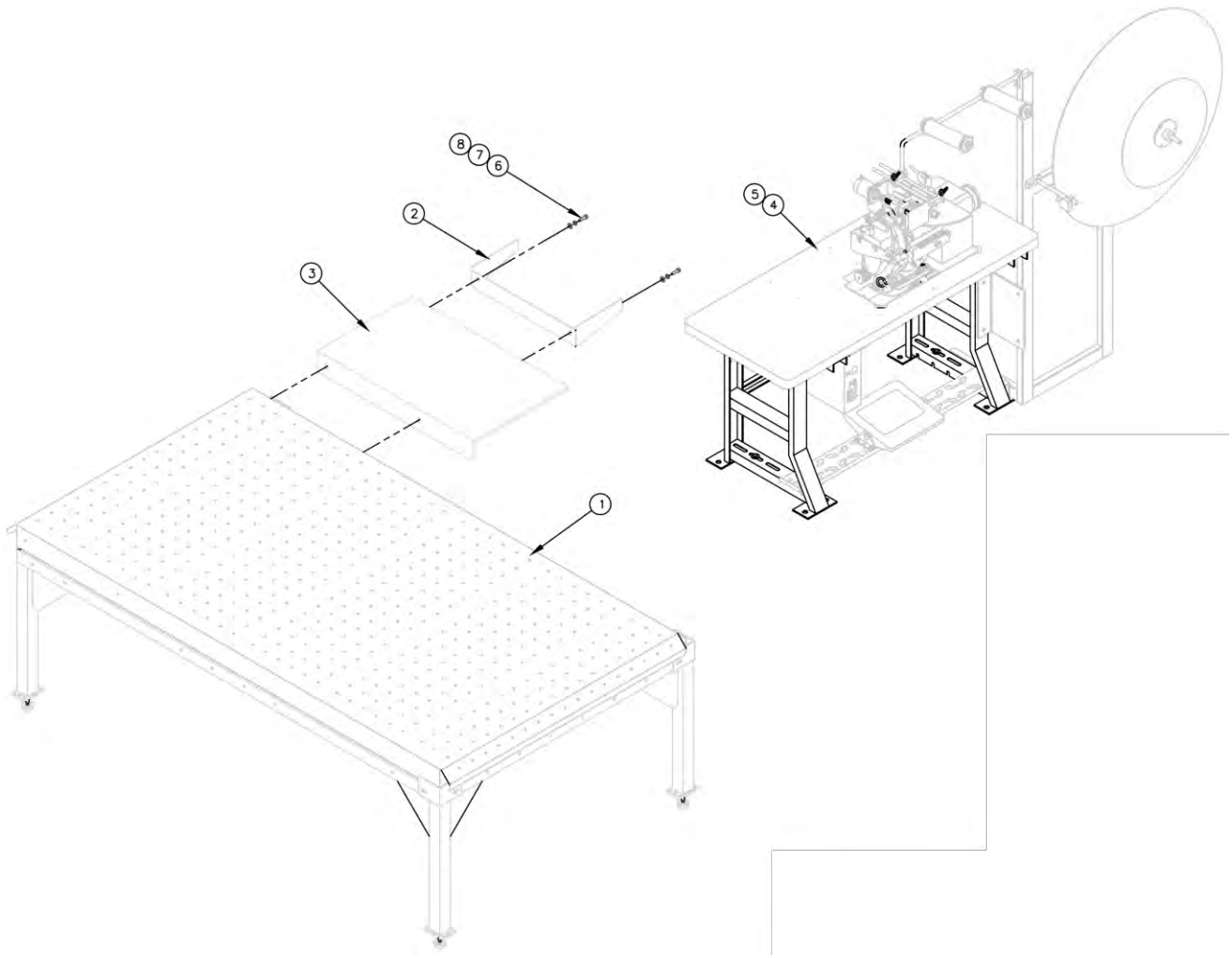

11335MSA Manual Pillowtop Ruffler, W/ Air table

AAC Drawing Number 192742C Rev2

NO.	QTY	PART #	DESCRIPTION	
1	1	1337A-160	Air Table Assy	Page 80
2	2	1337A-0168C	Retainer Brkt	
3	1	1337A-175	Shelf	
4	1	11335M	Manual Ruffler	Page 20
5	1	4048-2210MM	Table Top, Mod.	
6	2	SSHC10064	Screw, Hex Cap	
7	2	WWFS5/16	Flat Washer	
8	2	WWL5/16	Lock Washer	

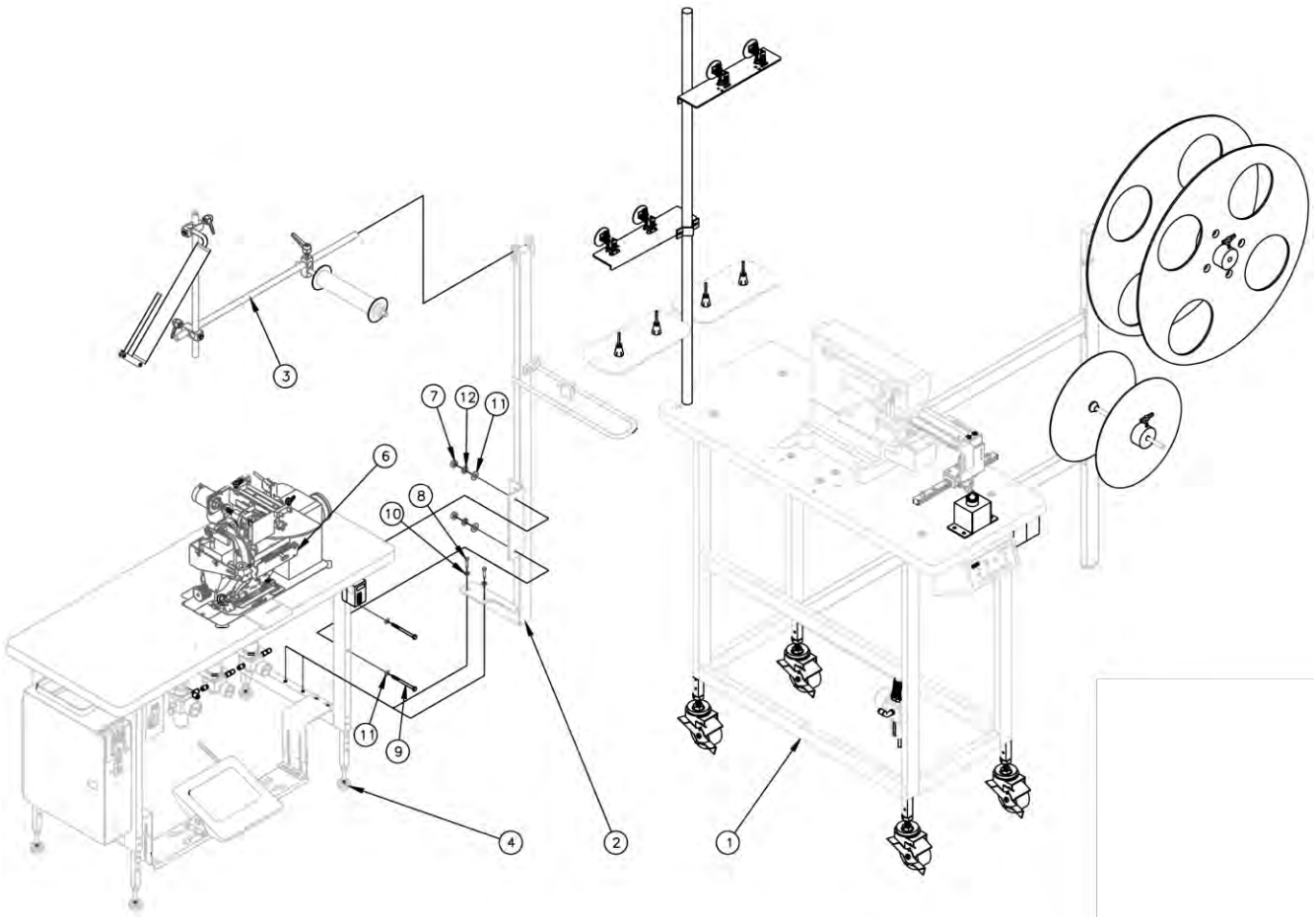

11335M-34 Manual Pillowtop Ruffler, W/ Auto Flanger

AAC Drawing Number 192763C Rev2

NO.	QTY	PART #	DESCRIPTION	
1	1	1334S-01	Auto Flanger	Page 83
2	1	1335M-4200A	Support Frame Assy	Page 74
3	1	1335M-425	Guide Roller Assy	Page 77
4	1	1335M-G	Generic Console	Page 47
5	AR	1335M-01WD	Wiring Diagram	Page 99
6	1	A-2216K5/16	Folder	
7	2	NNH3/8-16	Hex Nut	
8	2	SSHC01048	Screw, Hex Cap	
9	2	SSHC25192	Screw, Hex Cap	
10	2	WWFS1/4	Flat Washer	
11	4	WWFS3/8	Flat Washer	
12	2	WWL3/8	Lock Washer	
13	1	1335M-02	Hardware Kit	

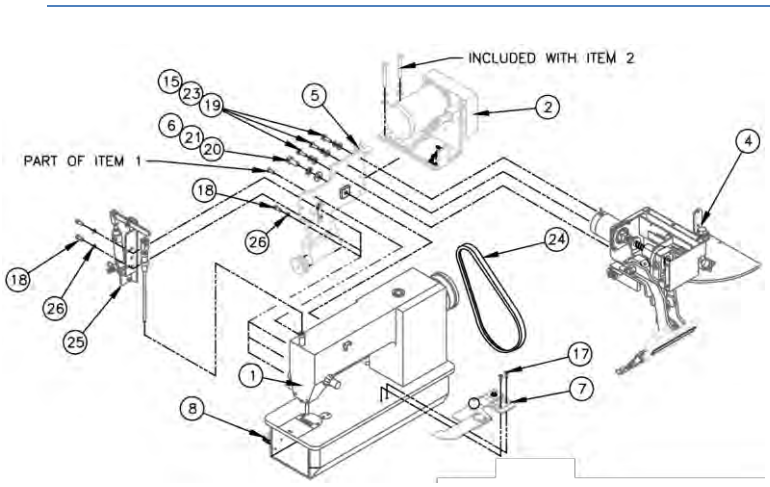

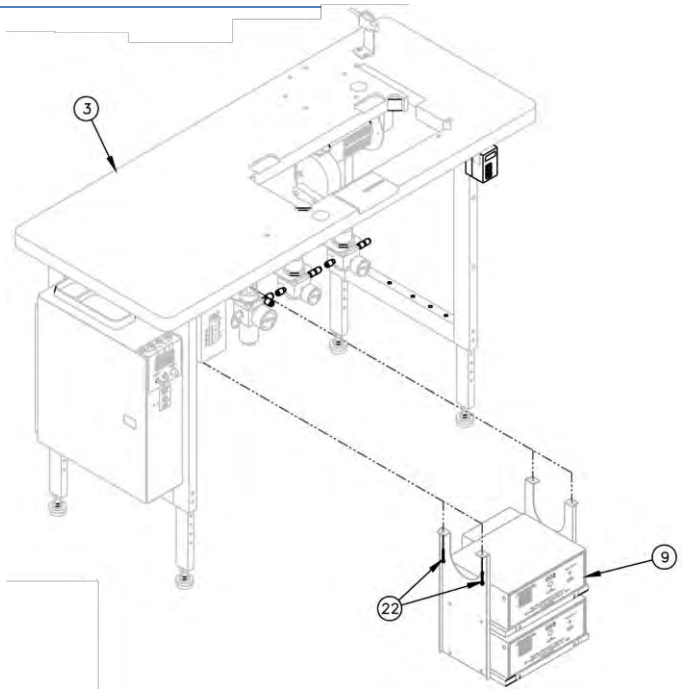

1335M-G Generic Console

AAC Drawing Number 192835C Rev3

NO.	QTY	PART #	DESCRIPTION	
1	1	1335M-10	Sew Head Assy	Page 89
2	1	1335M-120	Puller Drive Assy	Page 49
3	1	1335M-1000	Stand & Motor	Page 51
4	1	1335M-2000	Ruffler Assy	Page 53
5	1	1335M-3000A	Puller Assy	Page 57
6	1	WWFS5/16	Flat Washer	
7	1	1335M-5000B	Stripper Blade Assy	Page 58
8	1	1335M-6000	Footlift Assy	Page 59
9	1	1335M-9500	Stepper Box Assy	Page 62
10	AR	1335M-LAB	Labels	
11	1	1335M-PAR	Parameter List	Page 17
12	AR	1335M-PD	Pneumatic Diagram	Page 94
13	AR	1335M-WD	Wiring Diagram	Page 98
15	3	WWFS1/4	Flat Washer	
16	10	SNDBX1140	Needle, Size 140	
17	2	SSBC98032	Screw, Button Cap	
18	1	SSSC98040	Socket Cap Screw	
19	3	SSHC01048	Screw, Hex Cap	
20	1	SSHC20064	Screw, Hex Cap	
21	1	WWL5/16	Lock Washer	
22	4	SSZH#10048	Screw, Sheet Metal	
23	3	WWL1/4	Lock Washer	
24	1	ZX3840	V-Belt 38 x 40	
25	1	1335M-113	Foot Pressure Assy.	Page 88
26	3	WWL10	Lock Washer	
27	1	1959-112	2 POS Threaded Plate Assy.	

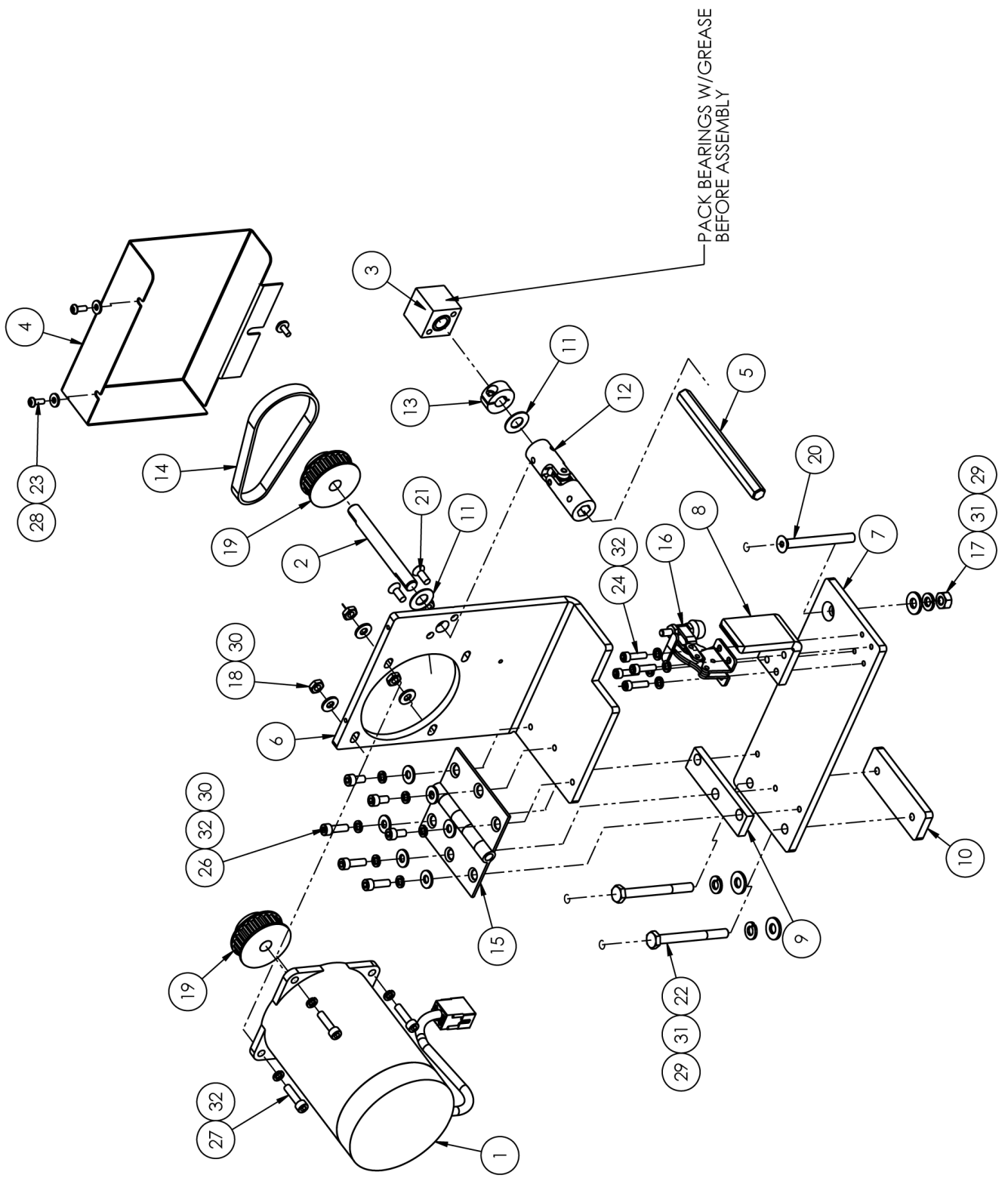
PACK BEARINGS W/GREASE
BEFORE ASSEMBLY
1
2
3
4
5
6
7
8
9
10
11
12
13
14
15
16
17
18
19
20
21
22
23
24
26
27
28
29
30
31
32

1335M-120 Puller Drive Assembly

AAC Drawing Number 9001014 Rev4

NO.	QTY	PART #	DESCRIPTION
1	1	011-020	MOTOR, STEPPER W/PLUG
2	1	1335-116	SHAFT,FLATTED,60C,.375
3	1	1335-119	BLOCK, BEARING
4	1	1335-124	GUARD, MOTOR BELT
5	1	1335M-121	HEX SHAFT, 3/8X4 3/8
6	1	1335M-127	MOUNT, MOTOR
7	1	1335M-128	PLATE, BASE
8	1	1335M-129	CLAMP SPACER
9	1	1335M-130	HINGE SPACER
10	1	1335M-131	PLATE, NUT, 1/4-20 @ 2.0
11	2	3517	WASHER,THRUST,BRONZE
12	1	3524-06A	U-JOINT,MODIFIED
13	1	CCCL6F	CLAMP COLLAR- 3/8
14	1	GG100XL037	BELT,GEAR,1/5P,3/8W
15	1	MM741-3A	HINGE,3 X 3,STANLEY
16	1	MM8096307	CLAMP
17	1	NNH1/4-20	1/4-20 HEX NUT
18	4	NNH10-32	HEX-NUT 10-32 REG.
19	2	PP24XLB37M1	PULLEY, GEAR,1/5 PITCH
20	1	SSFC01160	1/4-20 X 2-1/2 FLAT CAP
21	2	SSFC98032	10-32 X 1/2 FLAT ALLEN CAP
22	2	SSHC01160	1/4-20 X 2-1/2 HHCS
23	3	SSPS80024	#6-32 X 3/8 LG PAN HD
24	4	SSSC90040	8-32 X 5/8 SOC CAP SC
25	3	SSSC98024	10-32 X 3/8 SOC CAP
26	3	SSSC98040	10-32 X 5/8 SOC CAP
27	4	SSSC98048	10-32 X 3/4 SOC CAP
28	3	WWF6	DO NOT USE - SEE WWFS6
29	3	WWFS1/4	WASHER,FLAT,SAE,1/4
30	10	WWFS10	WASHER, FLAT, #10, SAE
31	3	WWL1/4	WASHER,LOCK,1/4
32	14	WWL10	WASHER,LOCK,#10,S/S

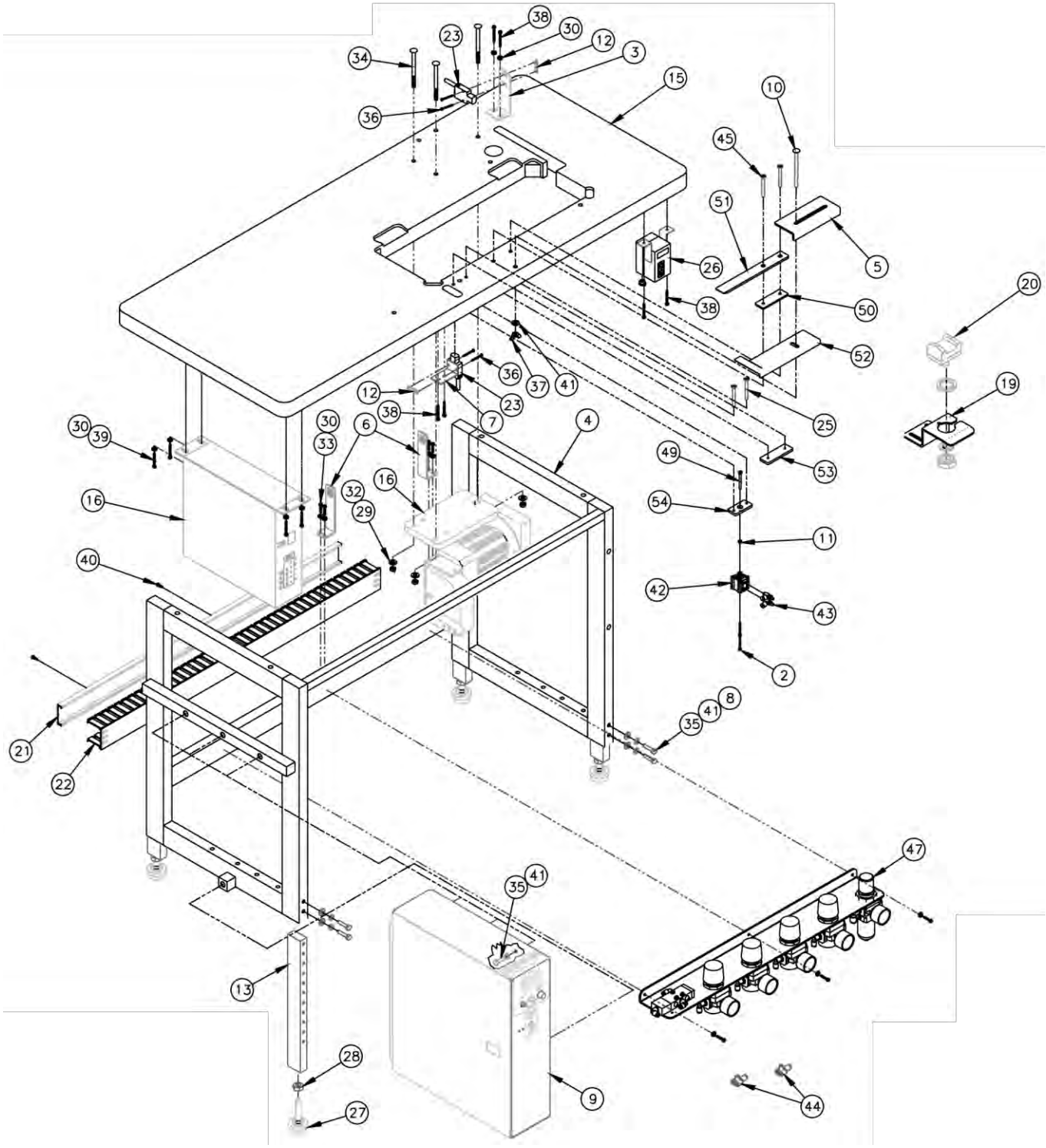
38
30
23
12
3
34
15
10
36
45
51
5
26
38
50
20
52
36
37
41
19
12
23
38
7
25
30
39
30
6
4
33
49
53
16
32
16
54
29
11
40
42
43
2
8
41
35
21
22
47
41
35
13
28
9
44
27

1335M-1000 Stand & Motor Assembly

AAC Drawing Number 192705C Rev8

NO.	QTY	PART #	DESCRIPTION	NO.	QTY	PART #	DESCRIPTION
1	1	0211-702A	Cable, Position Sensor	28	4	NNH1/2-13	Hex Nut
2	2	SSSCM3X30	Socket Cap Screw	29	3	NNH5/16-18	Hex Nut
3	1	1278-6689B	Table Eye Mount	30	15	WWFS10	Flat Washer
4	1	1335M-100	Frame	31	2	AAF3/16	Plastic Clamp
5	1	1335284	Edge Guide	32	3	WWF5/16	Flat Washer
6	2	1335M-1003	Motor Control Brkt	33	4	SSPS98032	Screw, Pan Head
7	1	1335M-1004	Under Table Eye Brkt	34	3	SSBK10160	Carriage Bolt
8	8	WWL1/4	Lock Washer	35	12	SSHC01048	Screw, Hex Cap
9	1	1335M-500	Control Box Assy	36	4	SSPS70048	Screw, Pan Head
10	1	SSBK01160	Carriage Bolt	37	1	NNW1/4-20	Wing Nut
11	1	NNHM4X0.7	Hex Nut	38	6	SSZH#10032	Screw, Sheet Metal
12	2	1975-412A	Nut Plate	39	4	SSZH#10064	Screw, Sheet Metal
13	4	132556-273	Leg	40	6	SSZS93032	Screw, Sheet Metal
14	2	SSSC98032	Socket Cap Screw	41	13	WWFS1/4	Flat Washer
15	1	4048-481	Table Top	42	1	AACNCQ2B16-10D	Air Cylinder
16	1	4059-DC1500	DC Motor	43	2	AA198RA510	Flow Control
17	2	4080-4508B	Cable, Step Motor	44	2	AAQUY-4-4	Quick Union Y
18	2	WWL10	Lock Washer	45	2	SSFS90128	Flat Slotted Screw
19	1	1278-6718A	TCH Swch Opto BRKT	46	1	FFHBL4579C	Receptacle
20	1	1278-6602A	Touch Switch Assy.	47	1	1335716	Pneumatic Shelf Assy.
21	3’	EEDC2X2	Wire Duct Cover	48	1	1335281	Nut Plate
22	3’	EEDF2X2	Wire Duct	49	1	SSSCM4X40	Socket Cap Screw
23	2	FFSM312LVQ	Electric Eye	50	1	1335274	Washer Plate
24	1	FFRK44T3P5	Euro-3P Cable	51	1	1335275	Tension Plate
25	2	SSFS98112	Flat Slotted Screw	52	1	1335278	Tension Finger
26	1	K-CB600	Motor Starter	53	1	1335280	Nut Plate
27	4	MMFB4444	Rubber Foot				

Page 87

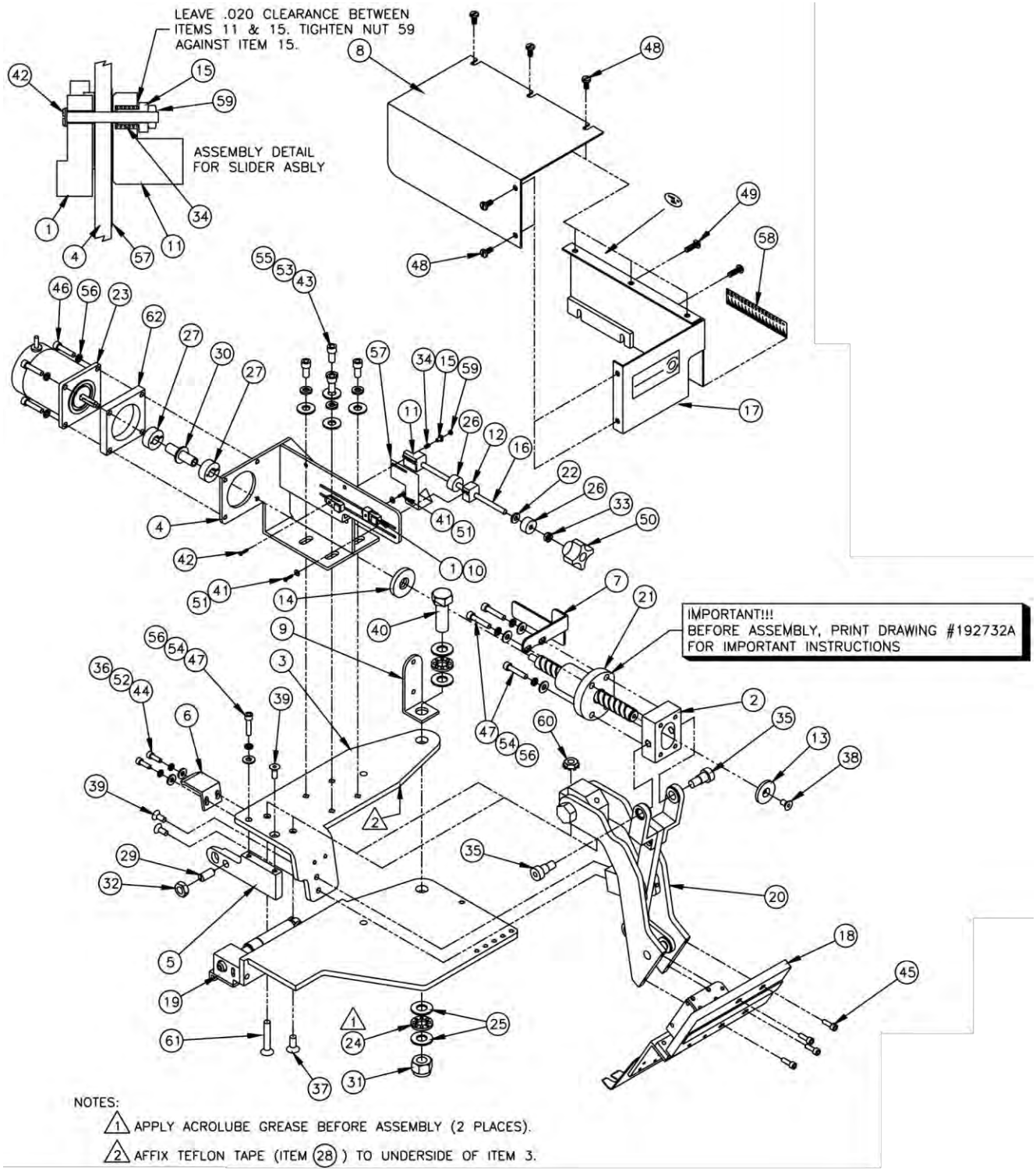
LEAVE .020 CLEARANCE BETWEEN ITEMS 11 & 15. TIGHTEN NUT 59 AGAINST ITEM 15.
ASSEMBLY DETAIL FOR SLIDER ASBLY
IMPORTANT!!!
BEFORE ASSEMBLY, PRINT DRAWING #192732A FOR IMPORTANT INSTRUCTIONS
NOTES:
1 APPLY ACROLUBE GREASE BEFORE ASSEMBLY (2 PLACES).
2 AFFIX TEFLON TAPE (ITEM 28) TO UNDERSIDE OF ITEM 3.

1335M-2000 Ruffler Assembly

AAC Drawing Number 192706C Rev7

NO.	QTY	PART #	DESCRIPTION	NO.	QTY	PART #	DESCRIPTION
1	2	1278-7055D	Prox Switch	32	1	NNJ3/8-16	Jam Nut
2	1	1335M-2006	Trunion Block	33	1	NNK10-32	Kep Nut
3	1	1335M-2008	Pivot Plate	34	1	RRLC026B1	Spring
4	1	1335M-2016	Motor Brkt Weldment	35	2	SSAS024024M	Screw, Allen Shoulder
5	1	1335M-2019	Locking Lever	36	2	WWL8	Lock Washer
6	1	1335M-2020	Hold Down Brkt	37	2	SSFC01040	Screw, Flat Allen
7	1	1335M-2021	Vane	38	1	SSFC98024	Screw, Flat Allen
8	1	1335M-2030	Clear Cover	39	3	SSFC98040	Screw, Flat Allen
9	1	1335M-2031	Pivot Brkt	40	1	SSHC45096	Screw, Hex Cap
10	1	1335M-2034	Nut Plate	41	2	SSPS50032	Screw, Pan Head
11	1	1335M-2035	Adjustment Nut	42	1	SSPS50048	Screw, Pan Head
12	1	1335M-2036	Support Block	43	4	SSSC01032	Screw, Socket Cap
13	1	1335M-2037	Stop Washer	44	2	SSSC90024	Screw, Socket Cap
14	1	1335M-2038	Stop Washer	45	4	SSSC90032	Screw, Socket Cap
15	1	1335M-2039	Nut, Spring Retainer	46	4	SSSC98032	Screw, Socket Cap
16	1	1335M-2040	Adjustment Screw	47	5	SSSC98048	Screw, Socket Cap
17	1	1335M-2042	Cover	48	5	SSTS90024	Screw, Truss Head
18	1	1335M-2100A	Ruffler Cylinder Assy	49	2	SSTS98040	Screw, Truss Head
19	1	1335M-2200	Mount Angle Assy	50	1	TTCL1APPK1‘	Plastic Knob
20	1	1335M-2300	Pivot Assy	51	2	WWF2	Flat Washer
21	1	1335M-2400	Ball Screw & Nut	52	2	WWF8	Flat Washer
22	1	AA198-7006	O-Ring	53	4	WWFS1/4	Flat Washer
23	1	AP-22E-103	Step Motor	54	5	WWFS10	Flat Washer
24	2	BBNTA815	Thrust Bearing	55	4	WWL1/4	Lock Washer
25	4	BBTRA815	Thrust Washer	56	9	WWL10	Lock Washer
26	2	CCCL10T	Clamp Collar	57	1	1335M-2047	Size Pointer
27	2	CCCL8F	Clamp Collar	58	AR	1325-4126	Scale Label
28	20”	MM132-10A1	Teflon Tape	59	1	NNH2-56	Hex Nut
29	1	SSMB58N	Ball Plunger	60	1	NNK1/4-20	Kep Nut
30	1	MM8FM	U-Joint	61	1	SSFC01096	Screw, Flat Allen
31	1	NNE1/2-13	Elastic Lock Nut	62	1	1335M-2049	Spacer

Page 63
Page 64
Page 37

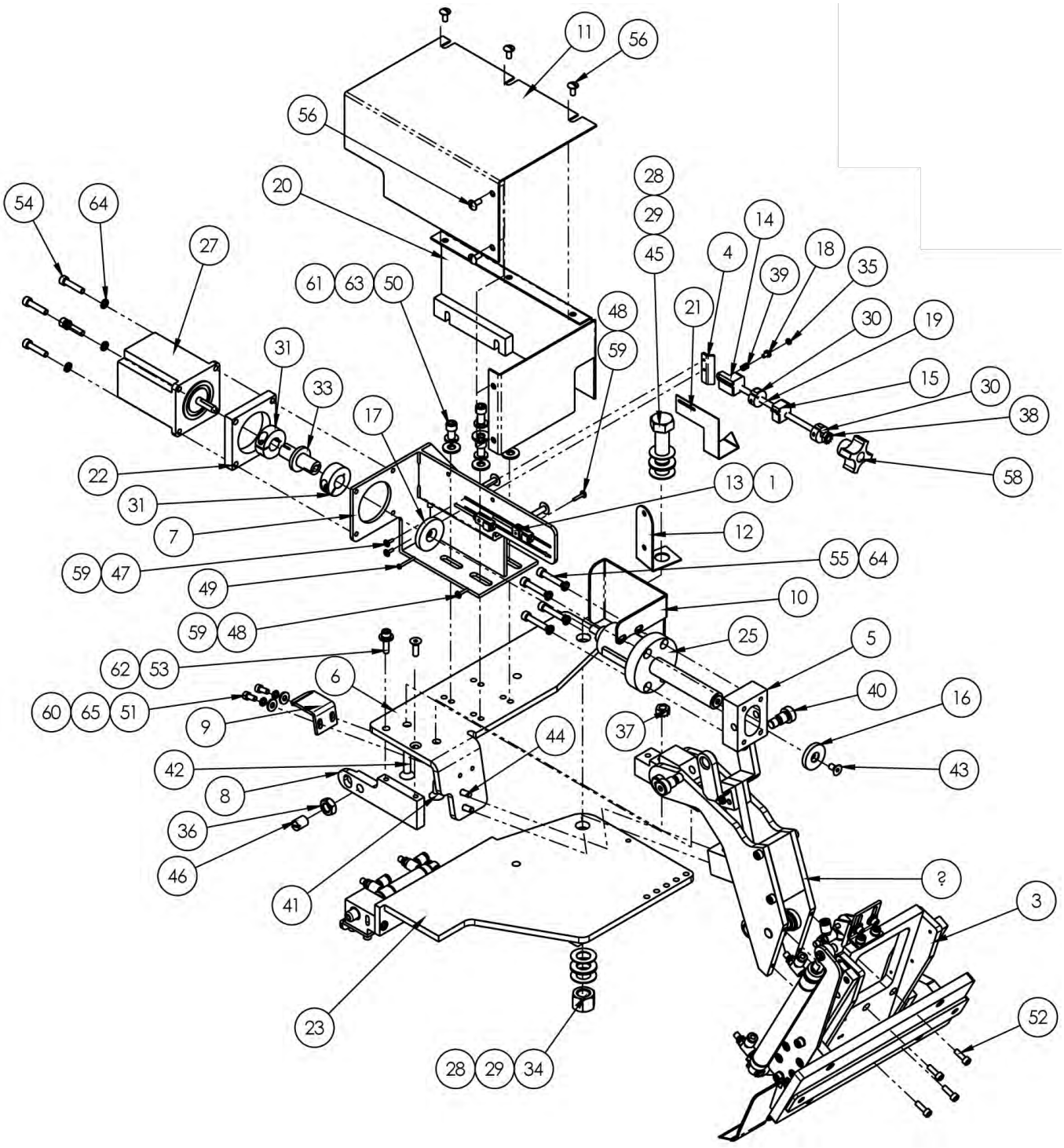
11
56
56
20
54
64
27
61
63
50
48
59
28
29
45
14
4
18
39
35
21
30
19
15
30
38
58
31
33
17
22
31
7
59
47
49
59
48
62
53
60
65
51
9
6
42
8
36
46
41
23
28
29
34
44
37
13
1
12
55
64
10
25
5
40
16
43
2
3
52

1335M-2000A Ruffler Assembly

AAC Drawing Number 9000004 Rev 3

NO.	QTY	PART #	DESCRIPTION	NO.	QTY	PART #	DESCRIPTION
1	2	1278-7055D	PROX SWITCH W/PLUG,12"	34	1	NNE1/2-13	ELASTIC LOCK NUT
NS	AR	1325-4126	TEFLON TAPE, 1"	35	1	NNH2-56	#2-56 HEX NUT
3	1	1335332	RUFFLER CYL LIFT ASSY	36	1	NNJ3/8-16	3/8-16 HEX JAM NUT
4	1	1335M-001	BRACKET, STOP, PRX SWITCH	37	1	NNK1/4-20	KEP NUT, 1/4-20
5	1	1335M-2006	BLOCK, NUT TRUNION	38	1	NNK10-32	KEP NUT, 10-32
6	1	1335M-2008	PIVOT PLATE	39	1	RRLC026B1	SPRING,COMP .026X.18X.25
7	1	1335M-2016	MTG BRKT WELDT	40	2	SSAS024024M	3/8 X 3/4 X 5/16-18
8	1	1335M-2019	LOCKING LEVELR	41	1	SSFC01040	1/4-20 X 5/8 FLAT ALLEN
9	1	1335M-2020	HLD DWN BRKT	42	1	SSFC01096	1/4-20 X 1-1/2 FLAT ALLEN
10	1	1335M-2021	VANE, SWITCH ACTUATING	43	1	SSFC98024	#10-32 X 3/8 FLAT ALLEN
11	1	1335M-2030	MOTOR COVER, CLEAR	44	3	SSFC98040	#10-32 X 5/8 FLAT ALLEN
12	1	1335M-2031	PIVOT BRKT AIR LINE	45	1	SSHC45096	1/2-13 X 1 1/2 L HHCS
13	1	1335M-2034	PLATE, NUT #2-56	46	1	SSMB58N	PLUNGER,BALL,3/8-16X5/8L
14	1	1335M-2035	ADJUSTMENT NUT, 10-32	47	2	SSPS50020	#2-56 X 5/16 PAN HD SLOT
15	1	1335M-2036	SUPPORT BLOCK	48	2	SSPS50032	#2-56 X 1/2 PAN HD SLOT
16	1	1335M-2037	WASHER, STOP	49	1	SSPS50048	#2-56 X 3/4 PAN HD SLOT
17	1	1335M-2038	STOP WASHER	50	4	SSSC01032	1/4-20 X 1/2 SOC CAP
18	1	1335M-2039	NUT,SPRING RETAINER	51	2	SSSC90024	#8-32 X 3/8 SOC CAP
19	1	1335M-2040	SCREW, ADJUSTMENT	52	4	SSSC90032	#8-32 X 1/2 SOC CAP
20	1	1335M-2042	COVER	53	1	SSSC98048	#10-32 X 3/4 SOC CAP
21	1	1335M-2047	POINTER, RUFFLE SIZE	54	4	SSSC98056	#10-32 X 7/8 SOC CAP
22	1	1335M-2049	SPACER, MOTOR, 3/8	55	4	SSSC98064	#10-32 X 1 SOC CAP
23	1	1335M-2200	PLATE, NUT, 8-32 @.43 CTC	56	5	SSTS90024	#8-32 X 3/8 TRUSS HD
24	1	1335M-2300B	PIVOT ASSY	57	2	SSTS98040	#10-32 X 5/8 TRUSS HD
25	1	1335M-2400	BALL SCREW AND NUT	58	1	TTCL1APPK1	PLASTIC KNOB, #10-32
26	1	AA198-7006	O RING, 1/8 ID, 1/4 OD	59	4	WWF2	WASHER, FLAT #2
27	1	AP-22E-103	STEP MOTOR,MODIFIED	60	2	WWF8	WASHER, FLAT #8
28	2	BBNTA815	BEARING,THRUST,1/2BORE	61	4	WWFS1/4	WASHER FLAT, 1/4
29	4	BBTRA815	WASHER,THRUST,STEEL 1/2	62	1	WWFS10	WASHER, FLAT #10
30	2	CCCL10T	CLAMP COLLAR TRD, 10-32	63	4	WWL1/4	1/4 LW
31	2	CCCL8F	CLAMP COLLAR- 1/2	64	9	WWL10	#10 LW
32	20"	MM130-4126	LABEL, SCALE, METRIC	65	2	WWL8	#8 LW
33	1	MM8FM	JOINT,UNIVERSAL,MOD				

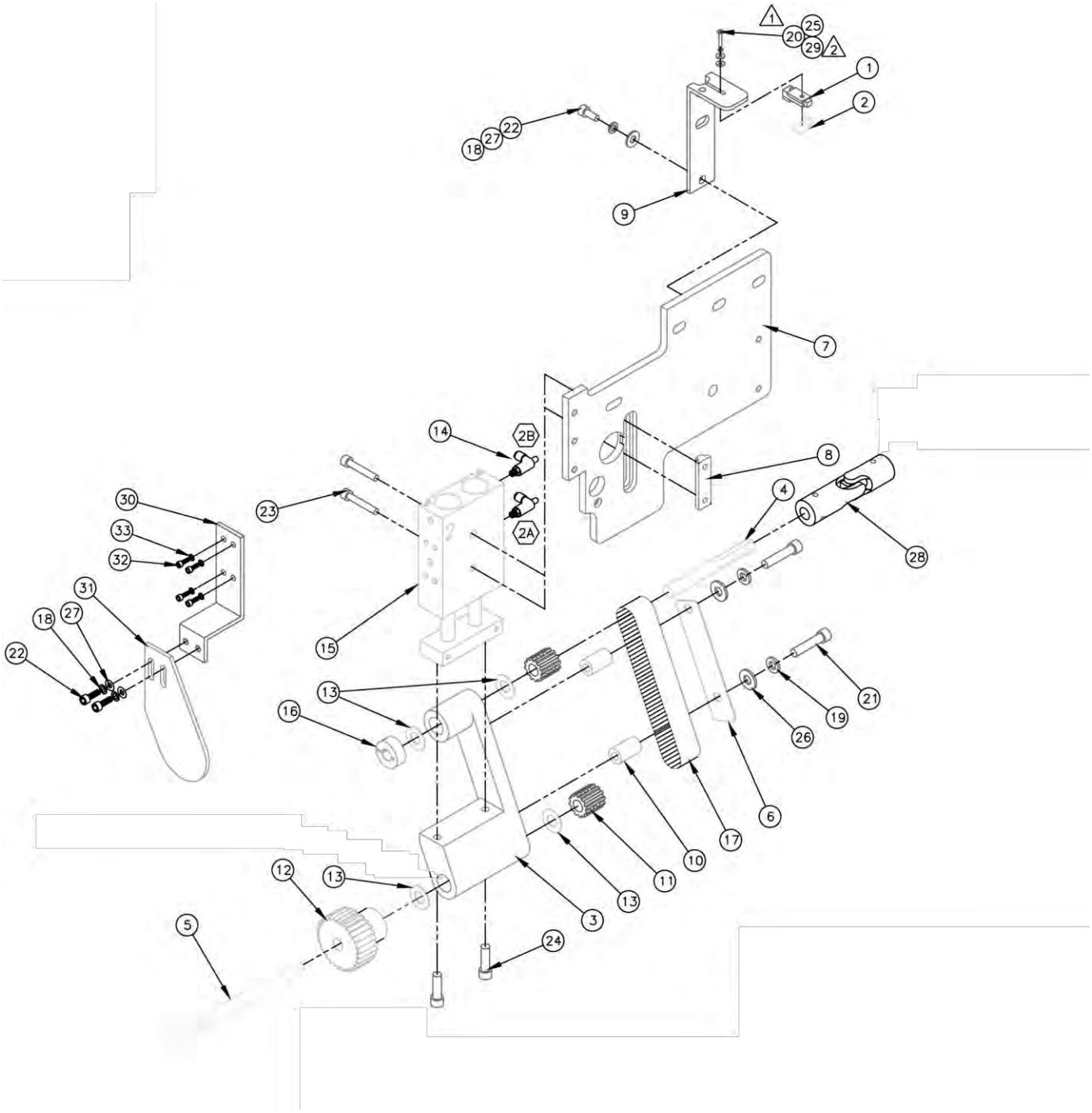
1
25
20
29
2
1
2
22
27
18
9
7
14
2B
8
4
28
23
2A
30
33
32
31
18
27
22
15
13
16
21
19
26
6
17
10
11
13
3
12
13
5
24

1335M-3000A Puller Assembly

AAC Drawing Number 192802C Rev3

NO.	QTY	PART #	DESCRIPTION
1	1	1278-7055D	Prox Switch
2	1	1335M-2034	Nut Plate
3	1	1335M-3001A	Yoke
4	1	1335M-3002	Shaft, .375 x 3.38
5	1	1335M-3003	Shaft, .375 x 5.33
6	1	1335M-3004	Belt Cover
7	1	1335M-3005	Cylinder Mount Brkt
8	1	1335M-3007	T-Nut
9	1	1335M-3008	Sensor Brkt
10	2	1535-241	Transfer Spacer
11	2	350196	Gear Pulley
12	1	3514-3C	Fluted Roller
13	4	3517	Thrust Washer
14	2	AA198RA510	Flow Control
15	1	AACXSM2020	Air Cylinder
16	1	CCCL6F	Clamp Collar
17	1	GG110XL75U	Gear Belt
18	3	WWL10	Lock Washer
19	2	WWL1/4	Lock Washer
20	1	SSPS50032	Screw, Pan Head
21	2	SSSC01080	Screw, Socket Cap
22	3	SSSC98024	Screw, Socket Cap
23	2	SSSC98064	Screw, Socket Cap
24	2	SSSCM5X20	Screw, Socket Cap
25	2	WWF2	Flat Washer
26	2	WWFS1/4	Flat Washer
27	3	WWFS10	Flat Washer
28	1	3524-06A	U-Joint
29	1	WWSI2	Int. Tooth Washer
30	1	1335M-312	Guard Brkt
31	1	1335M-313	Guard Plate
32	4	SSSCM4X10	Screw, Socket Cap
33	4	WWL8	Lock Washer

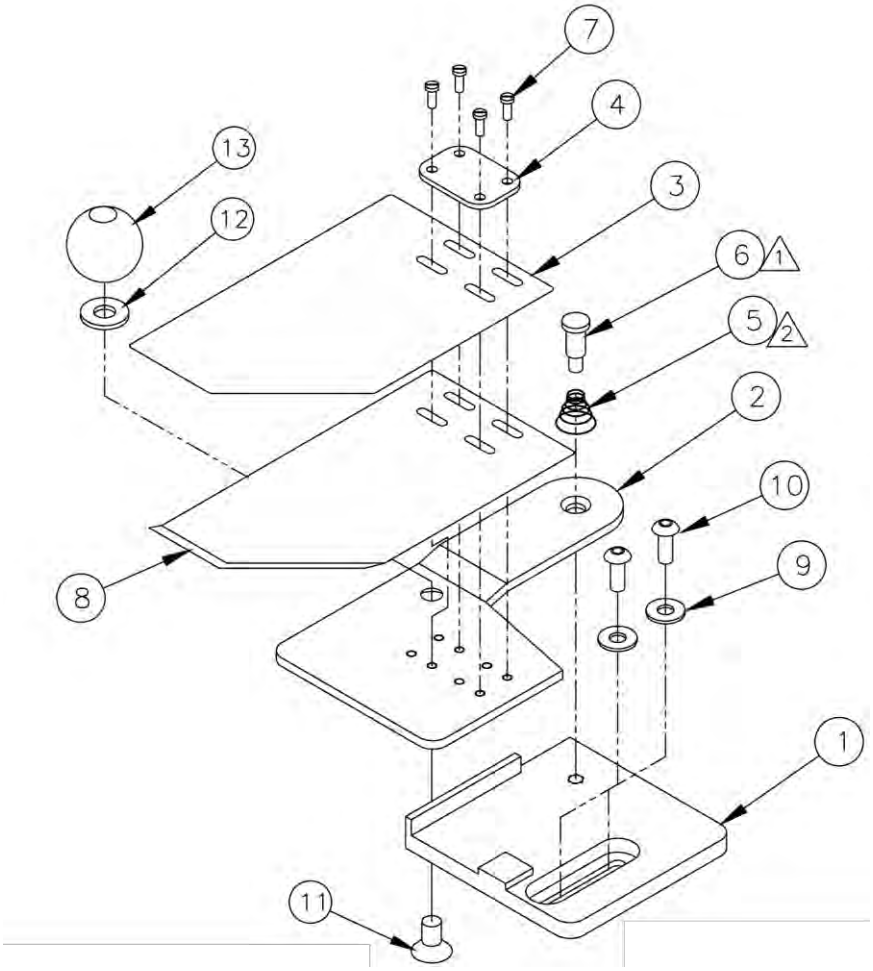

1335M-5000A Stripper Blade Assembly

AAC Drawing Number 192505B Rev2

NO.	QTY	PART #	DESCRIPTION
1	1	1335M-5001	Mounting Plate
2	1	1335M-5002	Mnt, Stripper Blade
3	1	1335M-5003B	Stripper Blade
4	1	1335M-5004	Washer Plate
5	1	RRBEEHIVEH	Spring
6	1	SSM200246	Screw, Shoulder
7	4	SSM22593	Screw, Fillister Head
8	1	1335M-5003C	Spacer
9	2	WWFS10	Flat Washer
10	2	SSBC98032	Screw, Button Cap
11	1	SSFC01032	Screw, Flat Allen
12	1	WWFS1/4	Flat Washer
13	1	SSMBK13	Plastic Knob

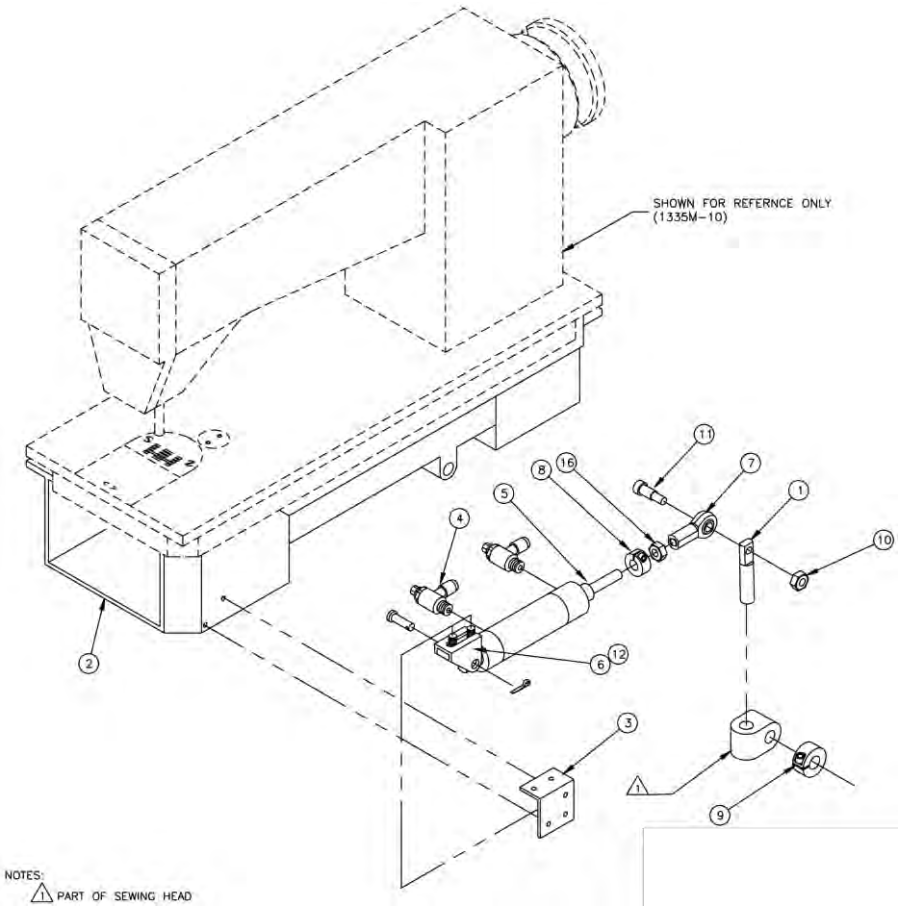

1335M-6000 Footlift Assembly

AAC Drawing Number 192736C Rev1

NO.	QTY	PART #	DESCRIPTION
1	1	1918-073	Footlift Link
2	1	32006517	Oil Tray, Mod
3	1	32006524	Pivot Mount Brkt
4	2	AA198RA508	Flow Control
5	1	AAC6DP-2	Air Cylinder
6	1	AAFBP-11C	Pivot Brkt
7	1	BBAW-5Z	Rod End
8	1	CCCL5F	Clamp Collar
9	1	CCSCL7F	Clamp Collar
10	1	NNH1/4-20	Hex Nut
11	1	SSAS020032	Screw, Allen Shoulder
12	2	SSBC98024	Screw, Button Cap
13	2	SSSC98024	Screw, Socket Cap
14	2	WWL10	Lock Washer
15	2	WWFS10	Flat Washer
16	1	NNJ5/16-24	Jam Nut

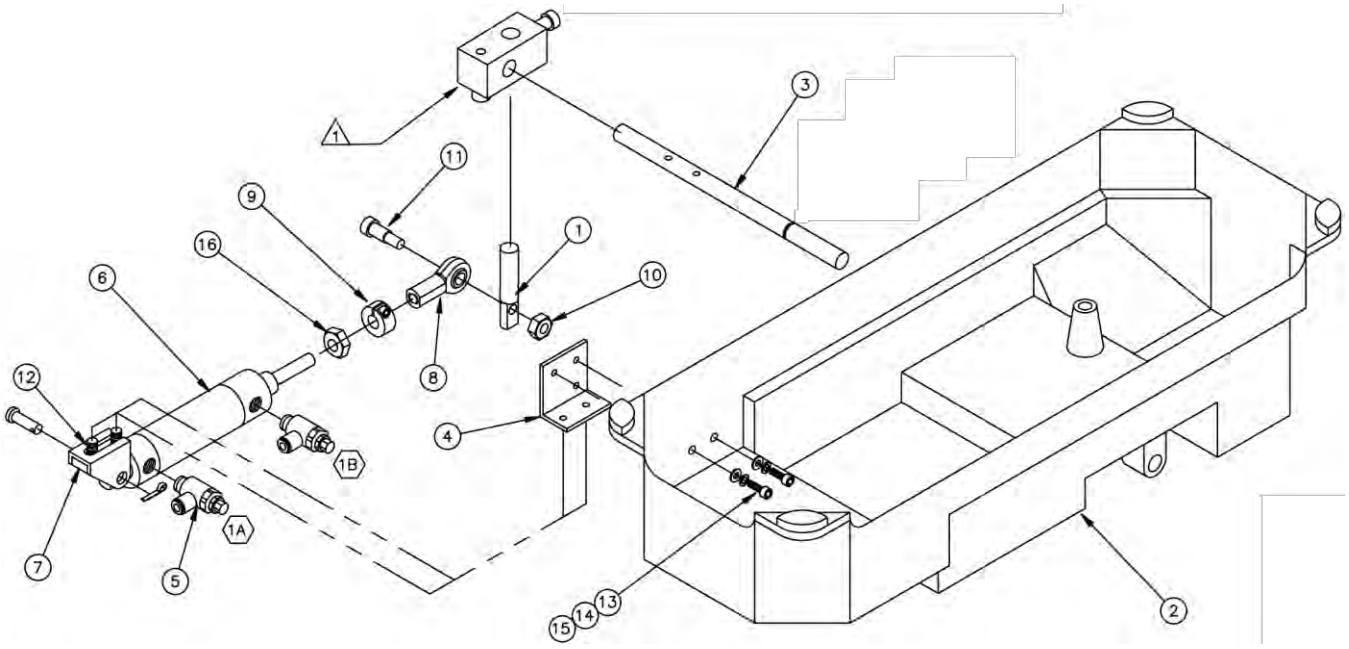

1335MD-6000 Footlift Assembly

AAC Drawing Number 192864C Rev 3

NO.	QTY	PART #	DESCRIPTION
1	1	1918-073	FOOTLIFT LINK
2	1	1335M-6001	OIL PAN, MODIFIED
3	1	1335M-6002	SHAFT
4	1	32006524	BRKT, PIVOT MNT
5	2	AA198RA508	FLOW CONTROL
6	1	AAC6DP-2	AIR CYLINDER
7	1	AAFBP-11C	PIVOT BRKT
8	1	BBAW-5Z	ROD END
9	1	CCCL5F	CLAMP COLLAR
10	1	NNH1/4-20	HEX NUT
11	1	SSAS020032	ALLEN SHOULDER SCREW
12	2	SSBC98016	BUTTON CAP SCREW
13	2	SSSC98024	SOCKET CAP SCREW
14	2	WWL10	LOCK WASHER
15	2	WWFS10	FLAT WASHER
16	1	NNJ5/16-24	JAM NUT

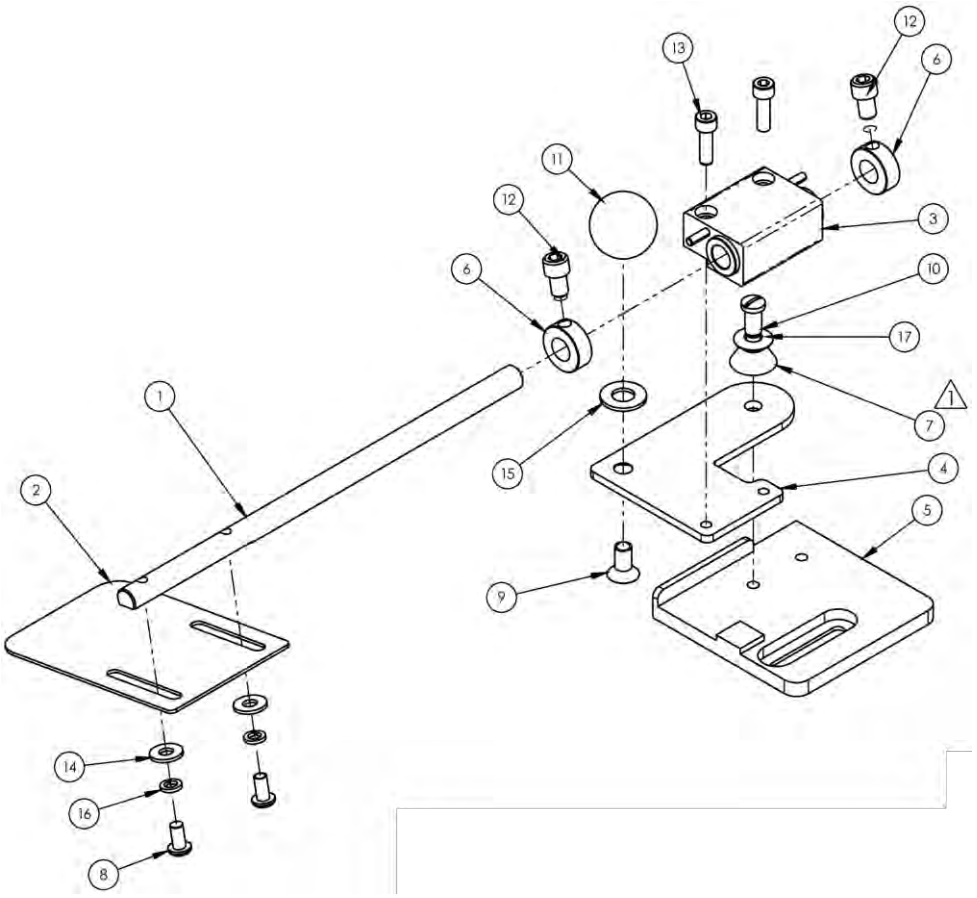

1335183 Stripper Blade

AAC Drawing Number 1335183 Rev 1

NO.	QTY	PART #	DESCRIPTION
1	1	1335154	PIVOT ROD, STRIP BLADE
2	1	1335475	STRIPPER BLADE-1804P
3	1	1335624	Block, Mounting
4	1	1335627	MOUNT ARM, STRIPPER BLADE
5	1	1335M-5001	PLATE,MOUNTING
6	2	CCSC6F3_8	COLLAR,SET 3/8
7	1	RRBEEHIVEH	SPRING,HEAVY BEEHIVE
8	2	SSBC98024	10-32 X 3/8 BUTTON CAP SC
9	1	SSFC01032	1/4-20 X 1/2 FLAT ALN CAP
10	1	SSM200246	SCREW,SHLDR,SLT.248X.437L
11	1	SSMBK13	KNOB,BLACK PLASTIC
12	2	SSSC01024	1/4-20 X 3/8 SOC CAP SC
13	2	SSSC98040	10-32 X 5/8 SOC CAP
14	2	WWFS10	WASHER, FLAT, #10, SAE
15	1	WWFS5/16	WASHER,FLAT,SAE,5/16
16	2	WWL10	WASHER,LOCK,#10
17	1	WWS307-1	WASHER,SPRING,BELVEL

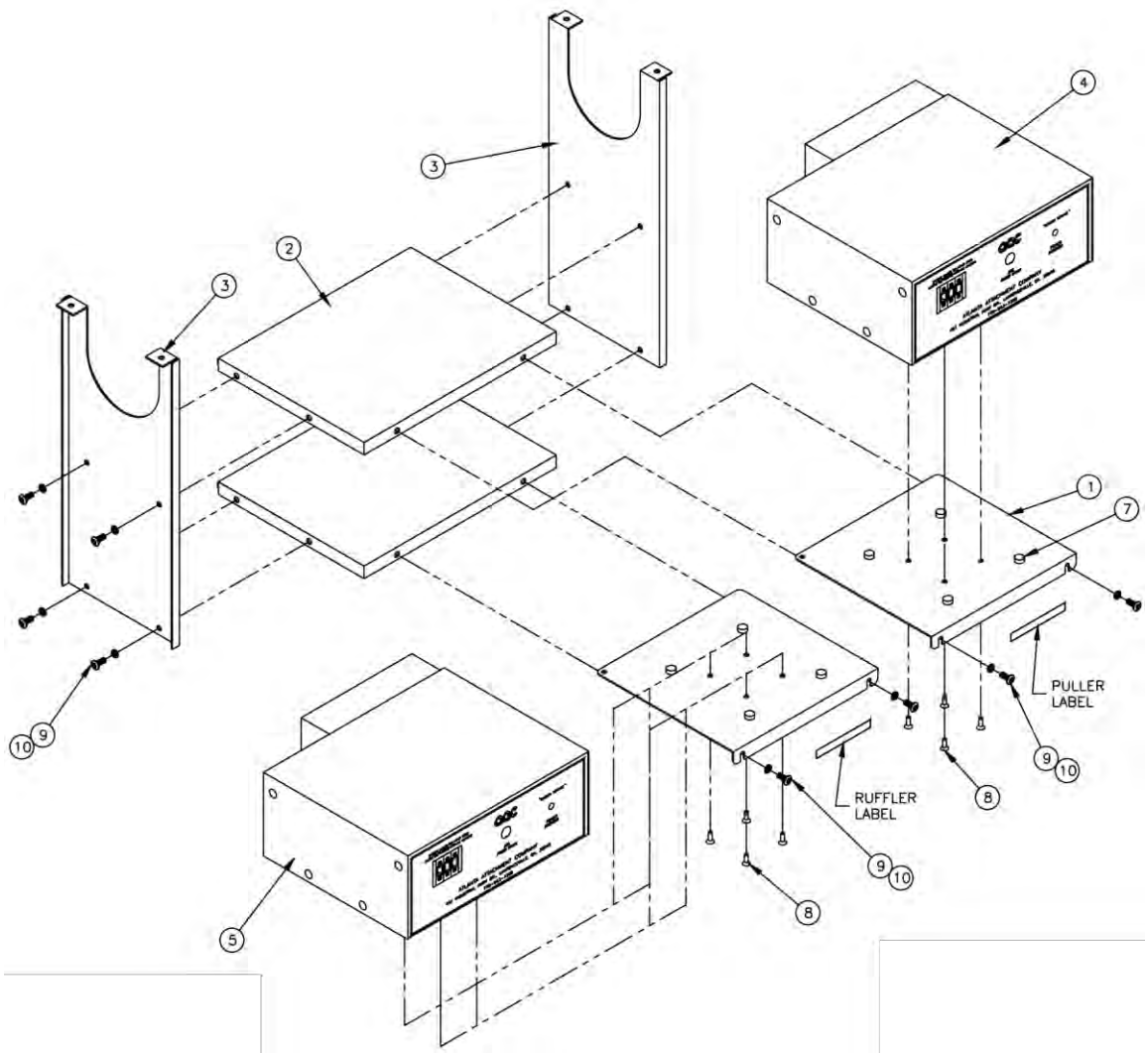

1335M-9500 Stepper Box Assembly

AAC Drawing Number 192710C Rev2

NO.	QTY	PART #	DESCRIPTION
1	2	1335M-9010	Step Box Brkt
2	2	1335M-9011	Shelf Motor Box
3	2	1335M-9012	Mnt, Ctrl Box
4	1	AP-28-800C	Control Box
5	1	AP-28-800Y1	Stepper Box
6	2	EE37F3312	Power Cord
7	8	MMSLD-ECH	Rubber Bumper
8	8	SSFC80032	Screw, Flat Allen
9	12	SSPP98032	Screw, Pan Phillips
10	12	WWL10	Lock Washer

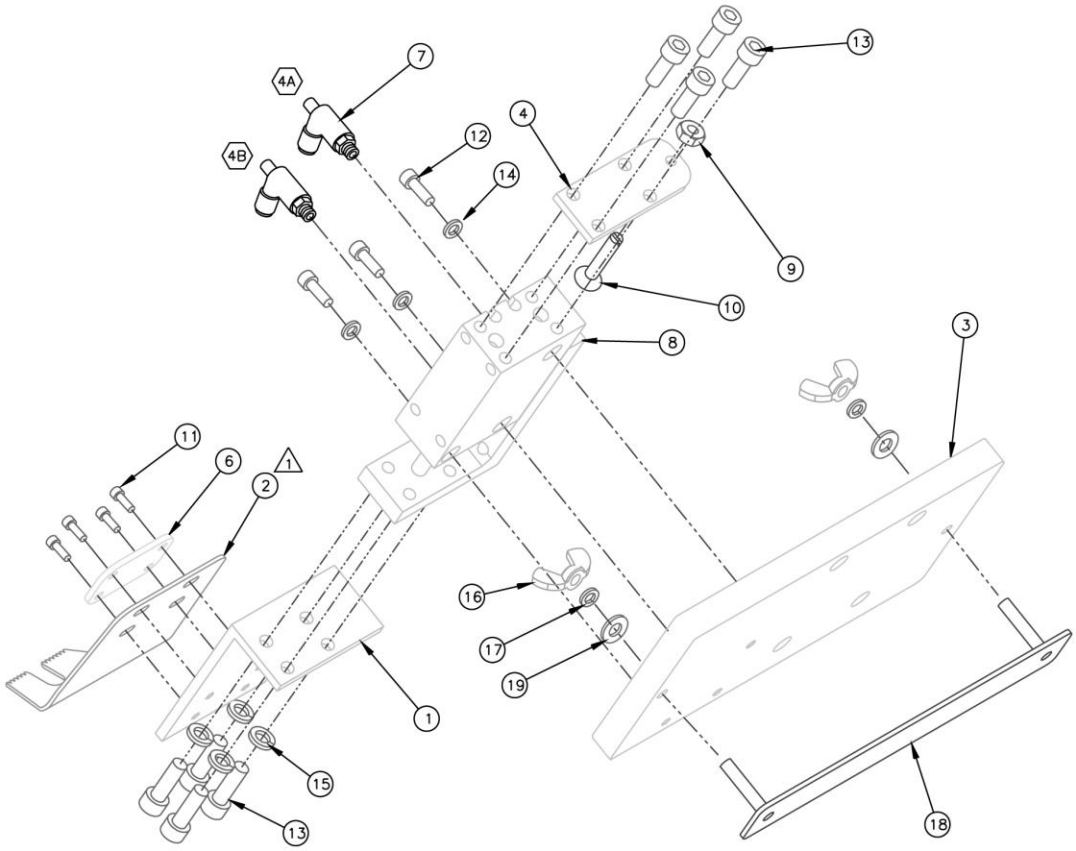

1335M-2100A Ruffler Cylinder Assembly

AAC Drawing Number 192504B Rev5

NO.	QTY	PART #	DESCRIPTION
1	1	1335M-2001	Ruffler Foot Brkt
2	1	1335M-2002C	Stripper Blade
3	1	1335M-2003A	Cylinder Mount Plate
4	1	1335M-2033	Stop Mount
6	1	1335M-5004	Washer Plate
7	2	AA198RA510	Flow Control
8	1	AACMXH1025	Air Cylinder
9	1	NNH8-32	Hex Nut
10	1	SSFC90064M	Screw, Flat Allen
11	4	SSM22593	Screw, Fillister Head
12	3	SSSC80064	Screw, Socket Cap
13	8	SSSCM4X10	Screw, Socket Cap
14	3	WWL6	Lock Washer
15	4	WWL8	Lock Washer
16	2	NNW10-32	Wing Nut
17	2	WWL10	Lock Washer
18	1	1335M-2048	Stud Plate
19	2	WWFS10	Flat Washer

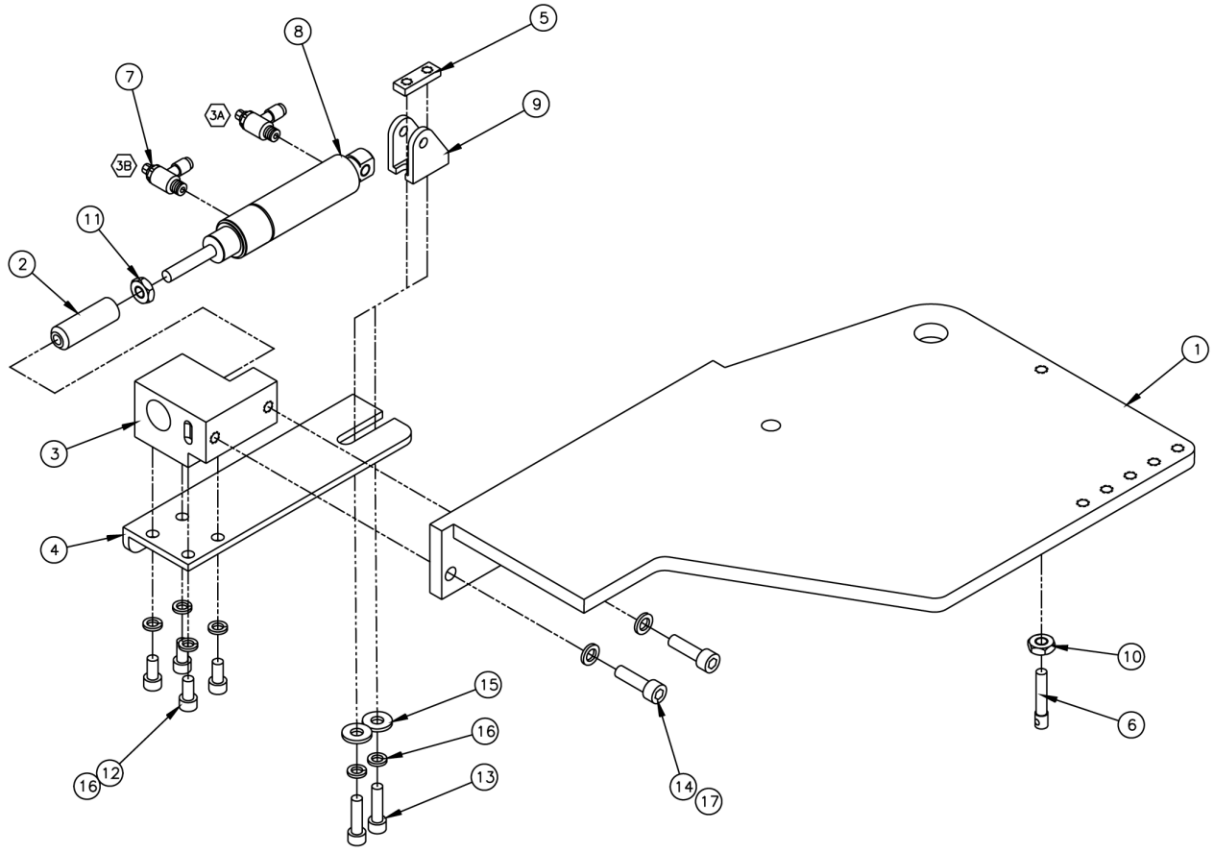

1335M-2200 Ruffler Mounting Angle Assembly

AAC Drawing Number 192727C Rev1

NO.	QTY	PART #	DESCRIPTION
1	1	1335M-2005	Mounting Angle
2	1	1335M-2017	Rod End
3	1	1335M-2027	Cylinder Mount
4	1	1335M-2028	Cylinder Support
5	1	1335M-2046	Nut Plate
6	1	A-2206A	Threaded Rod
7	2	AA198RA510	Flow Control
8	1	AAC8DP-.5	Air Cylinder
9	1	AAFBP-8C	Pivot Brkt
10	1	NNH10-32	Hex Nut
11	1	NNH10-32S	Hex Nut, Small
12	4	SSSC90024	Screw, Socket Cap
13	2	SSSC90032	Screw, Socket Cap
14	2	SSSC98040	Screw, Socket Cap
15	2	WWF8	Flat Washer
16	6	WWL8	Lock Washer
17	2	WWL10	Lock washer

1335M-2400 Ball Screw and Nut Assembly

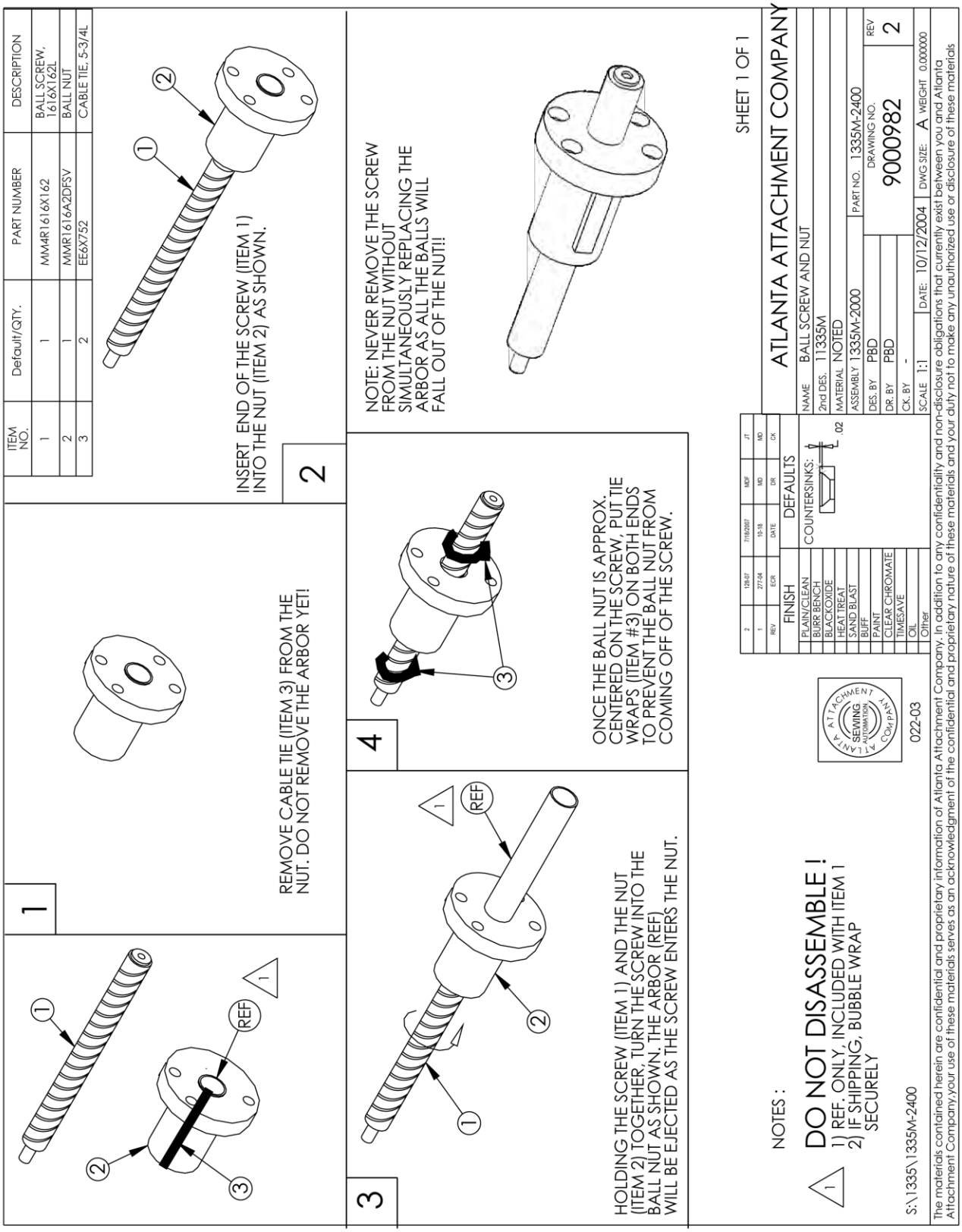

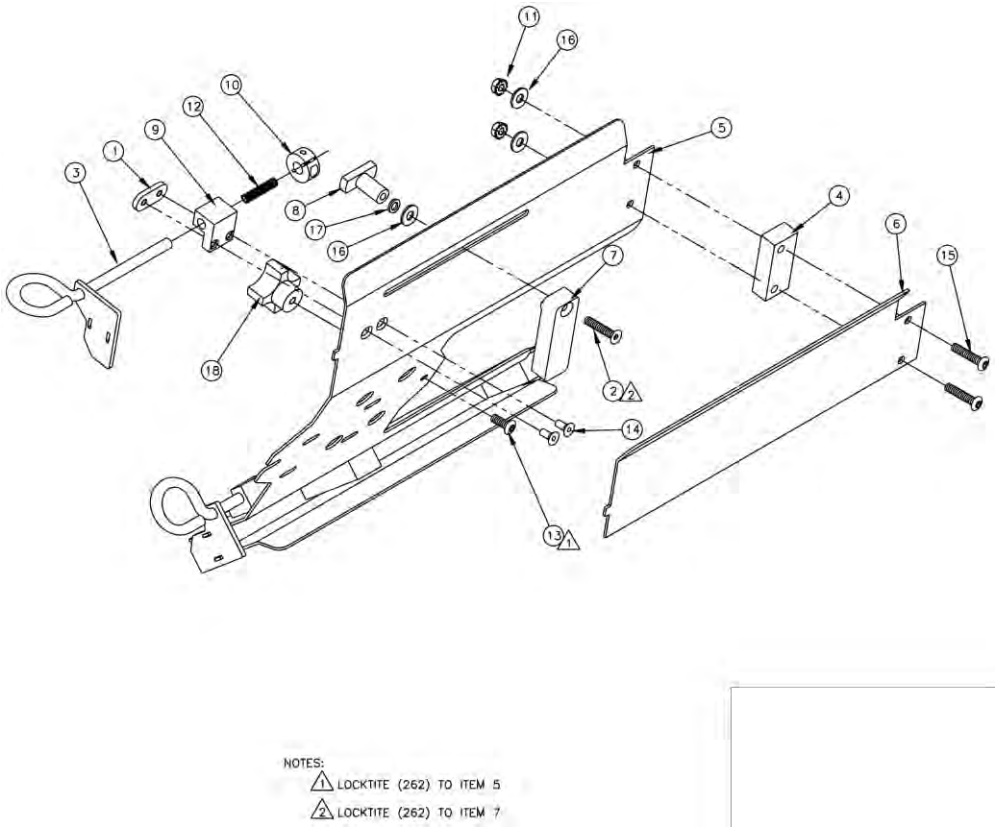

A-2216D 1/2 Book Folder, 1/2 “Capacity

AAC Drawing Number 192757C Rev0

NO.	QTY	PART #	DESCRIPTION
1	2	211-064	Nut Plate
2	2	SSFC98064	Screw, Flat Allen
3	2	A-2216B17	Plate End Assy
4	2	A-2216G31	Spacer, 1/2”
5	1	A-2216D02	Folder Plate
6	2	A-22166D04	Folder Top
7	2	A-2216D36	Guide, 7/16
8	2	A-2216G10	Wing Nut
9	2	A-2216G17	Rod Block
10	2	CCCL4F	Clamp Collar
11	4	NNK10-32	Kep Nut
12	2	RRLC038E13	Spring
13	1	SSBC98064	Screw, Button Cap
14	4	SSFC90032	Screw, Flat Allen
15	4	SSBC98048	Screw, Button Cap
16	6	WWFS10	Flat Washer
17	2	WWL10	Lock Washer
18	1	TTCL1APPK1	Plastic Knob

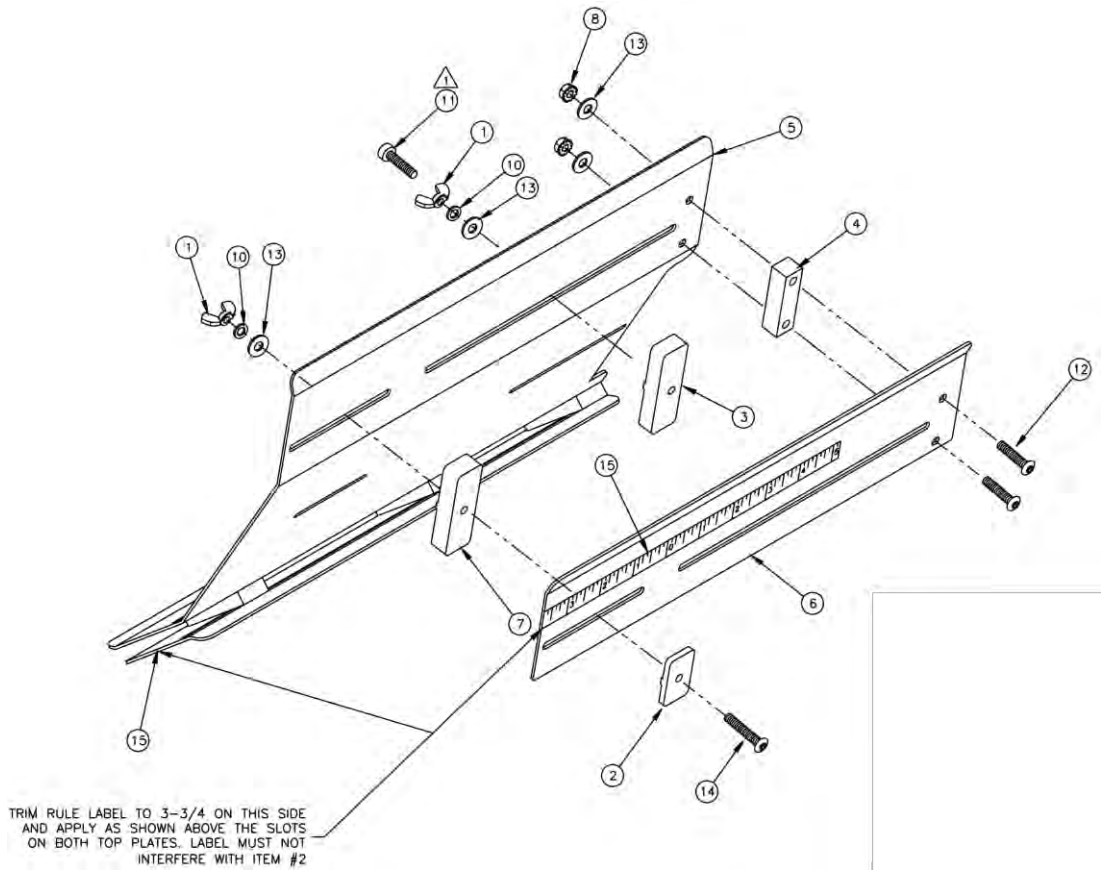

A-2216K5/16 Flat Folder W/ Flange, 5/16 x 6" Capacity

AAC Drawing Number 192836C Rev3

NO.	QTY	PART #	DESCRIPTION
1	4	NNW10-32	Wing Nut
2	2	A-2216D22	T-Nut
3	2	A-2216D53	Spacer, 1/4
4	2	A-2216G29	Spacer, 5/16
5	1	A-2216K02	Folder Plate
6	2	A-2216K04	Folder Top
7	2	A-2216D34	Guide, 5/16
8	4	NNK10-32	Kep Nut
10	4	WWL10	Lock Washer
11	2	SSSC98040	Screw, Socket Cap
12	4	SSBC98048	Screw, Button Cap
13	8	WWFS10	Flat Washer
14	2	SSBC98064	Screw, Button Cap
15	1	1335A-302	Label

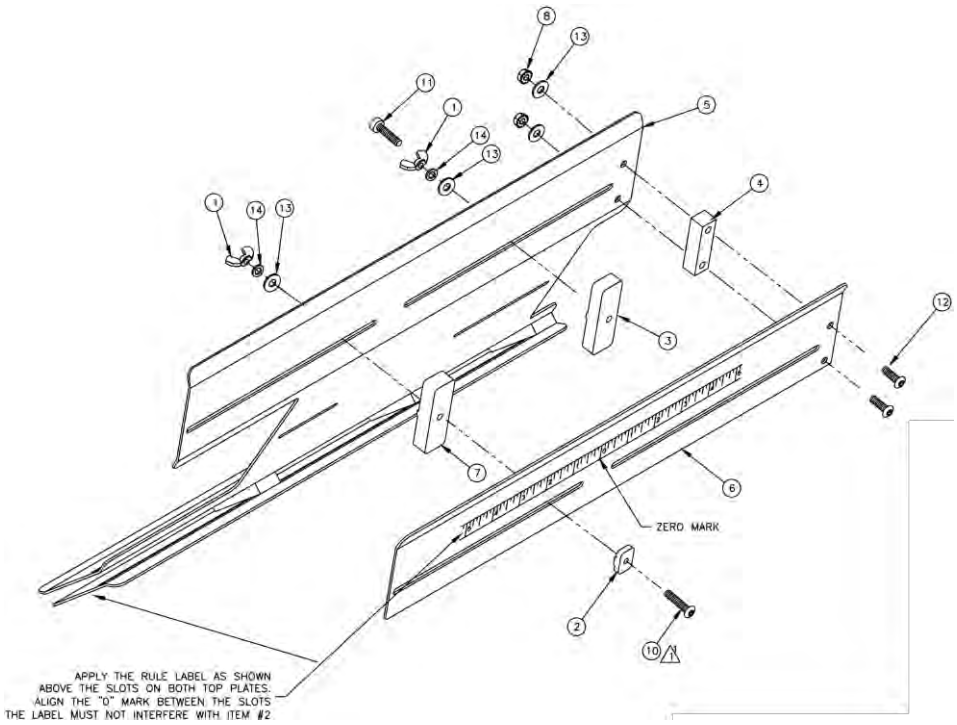

A-2216L5/16 Euro Folder W/ Flange, 5/16 x 9" Capacity

AAC Drawing Number 192823C Rev3

NO.	QTY	PART #	DESCRIPTION
1	6	NNW10-32	Wing Nut
2	2	A-2216D22	T-Nut
3	2	A-2216D53	Spacer, 1/4
4	2	A-2216G29	Spacer, 5/16
5	1	A-2216L02	Folder Plate
6	2	A-2216L04	Folder Top
7	2	A-2216D34	Guide, 5/16
8	4	NNK10-32	Kep Nut
10	2	SSBC98064	Screw, Button Cap
11	2	SSSC90040	Screw, Socket Cap
12	6	SSBC98048	Screw, Button Cap
13	8	WWFS10	Flat Washer
14	8	WWL10	Lock Washer
15	AR	1335A-302	Rule Label
16	2	A-2216D37	Left Folder Guide
17	2	A-2216D55	Folder Guide
18	2	A-2216G30	Folder Spacer
19	2	SSBC98056	Button Cap Screw

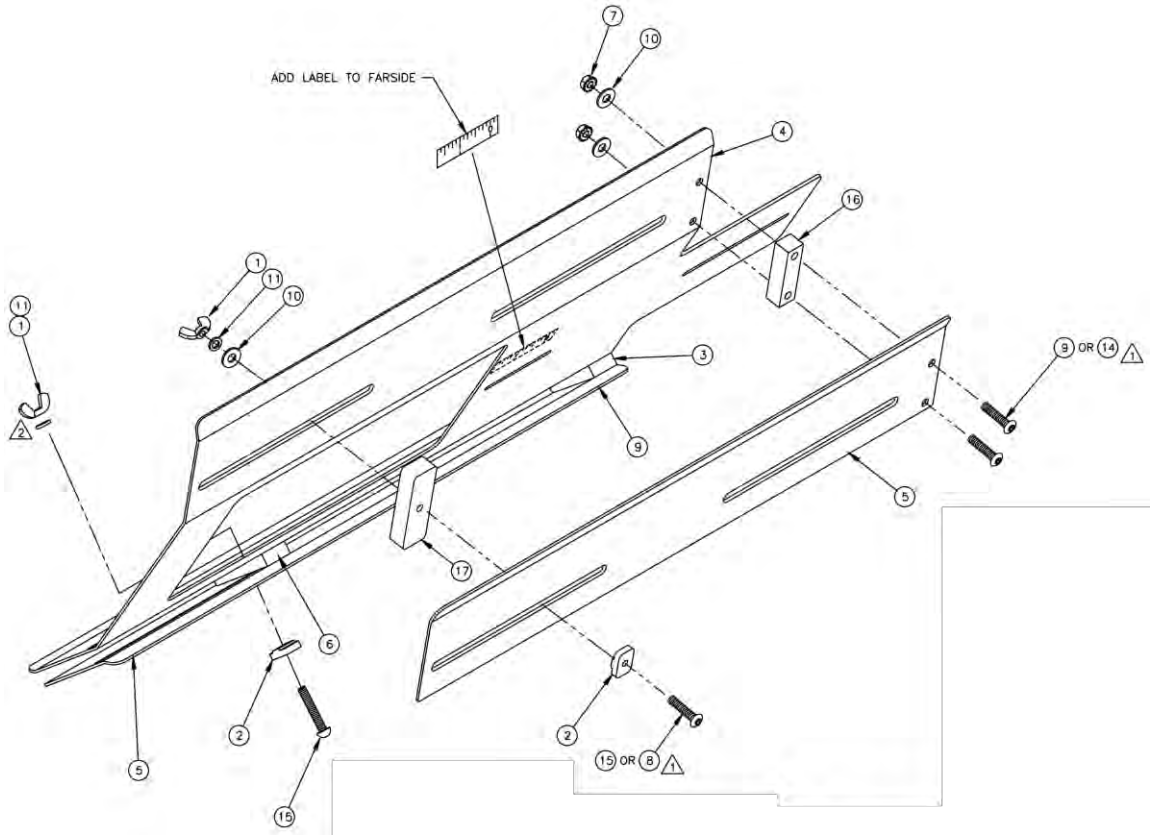

A-2216M5 Flat Folder W/ Flange, 5/16 x 6" Capacity

AAC Drawing Number 192824C Rev6

NO.	QTY	PART #	DESCRIPTION
1	2	NNW10-32	Wing Nut
2	2	A-2216D22	T-Nut
3	1	A-2216G29	Spacer, 5/16
4	1	A-2216M02	Folder Plate
5	2	A-2216M04	Folder Top
6	1	A-2216D34	Guide, 5/16
7	4	NNK10-32	Kep Nut
8	1	SSBC98064	Screw, Button Cap
9	4	SSBC98048	Screw, Button Cap
10	5	WWFS10	Flat Washer
11	2	WWL10	Lock Washer
12	1	A-2216G34	Spacer, 9/16
13	1	A-2216D39	Guide, 9/16
14	2	SSBC98056	Button Cap Screw
15	2	SSBC98072	Button Cap Screw
16	1	A-2216G30	Spacer, 7/16
17	1	A-2216D37	Guide, 7/16

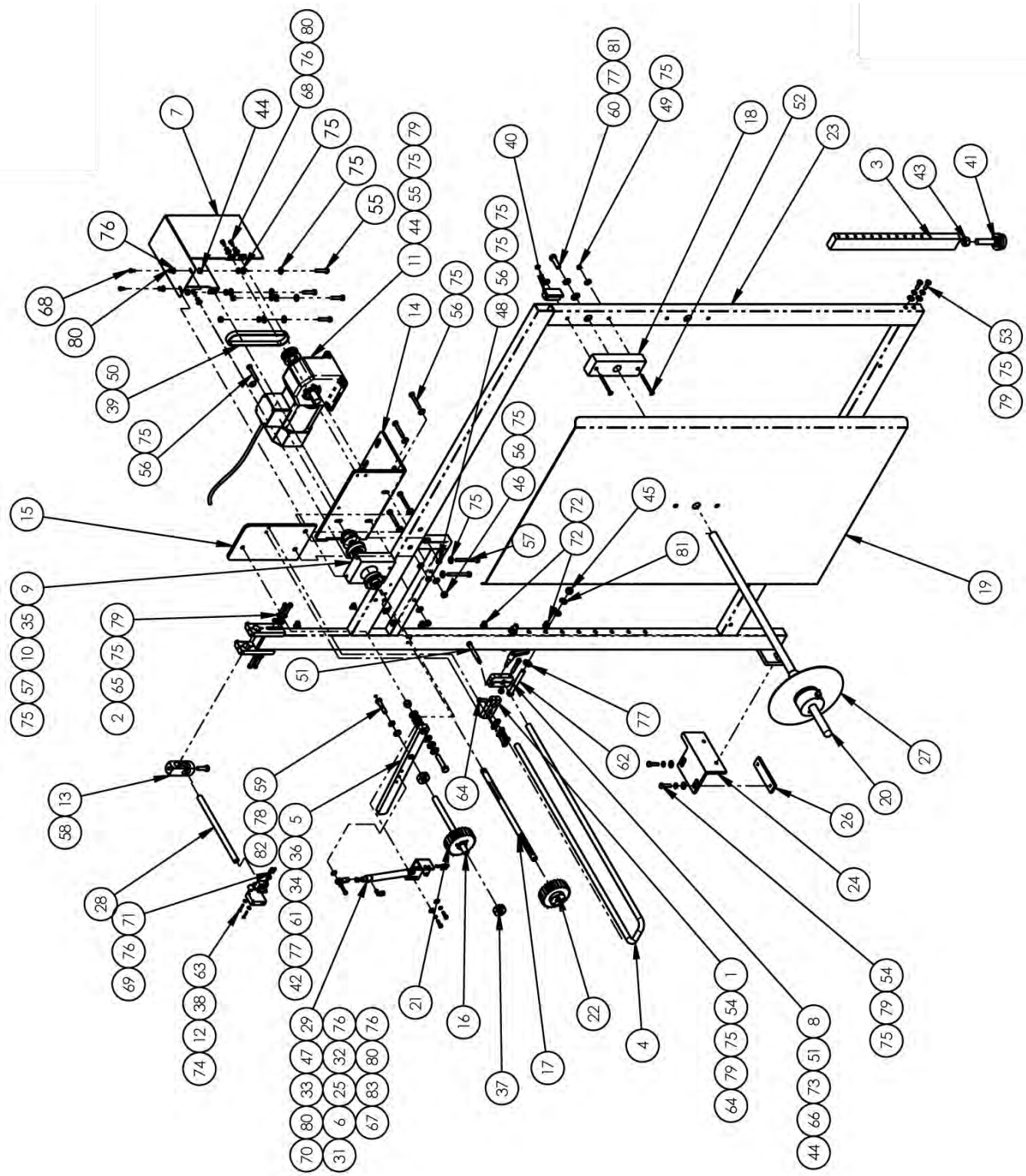

1335105 Unwinder Assembly

AAC Drawing Number 1335105 Rev15

NO.	QTY	PART#	DESCRIPTION	NO.	QTY	PART#	DESCRIPTION
1	1	211-057	PULLEY, 3/8P, 12T	43	1	NNH1/2-13	1/2-13 HEX NUT
2	1	1325-346	HOLDER,ROD,1/2	44	5	NNH1/4-20	1/4-20 HEX NUT
3	2	1325-346A	HOLDER, ROD, 3/4"	45	3	NNH3/8-16	3/8-16 HEX NUT
4	1	1335-837A	ROD,1/2 DIA,	46	3	NNH5/16-18	5/16-18 HEX NUT
5	1	1335M-2046	PLATE,NUT,8-32	47	1	NNJ10-32	NUT,JAM
6	1	1335M-4007	COVER, BELT	48	2	NNK1/4-20	KEP NUT, 1/4-20
7	1	1347-001	EDGE GUIDE,SPLIT	49	2	NNK10-32	KEP NUT, 10-32
8	1	1961-365	YOKE, BEARING	50	1	PP12LF050-3/4	PULLEY,GEAR,3/8P
9	1	8732-0576	ROD, STRAIGHT, SS,	51	1	SSAS020128	5/16 X 2 1/4-20 SHLD
10	1	23218DM	MOTOR ASSY,GEAR	52	2	SSFC98240	#10-32 X 2.5 FLAT
11	1	28201	CROSS BLOCK	53	2	SSHC01048	1/4-20 X 3/4 HEX
12	1	132556-273	LEG, 3/4 X 1-1/2 X	54	4	SSHC01064	1/4-20 X 1 HEX
13	1	265155A	HOLDER, EYE	55	4	SSHC01080	1/4-20 X 1-1/4 HEX
14	1	1335112	MOUNT,MOTOR	56	5	SSHC01112	1/4-20 X 1-3/4 HEX
15	1	1335115	MOUNT, PINCH	57	2	SSHC01160	1/4-20 X 2-1/2 HEX
16	1	1335116	DRIVE ROD	58	1	SSHC10064	5/16-18 X 1" HEX
17	1	1335117	SHAFT, DRIVE	59	1	SSHC10096	5/16-18 X 1-1/2 HEX
18	1	1335118	MOUNT, DISC	60	1	SSHC25080	3/8-16 X 1-1/4 HEX
19	1	1335119	DISC	61	1	SSHC25112	3/8-16 X 1-3/4 HEX
20	1	1335139	ROD,SS,3/4 X 28.0L	62	2	SSHC25192	3/8-16 X 3 HEX
21	1	1335189	LINK, IDLER ROLLER	63	2	SSPS70048	#4-40 X 3/4 PAN
22	1	1335497	ROLLER, FLUTTED	64	1	SSSC01048	1/4-20 X 3/4 SOC
23	1	1335498	DRIVE ROLLER	65	4	SSSC01064	1/4-20 X 1 SOC
24	1	1335771	UNWINDER FRAME	66	1	SSSC01096	1/4-20 X 1-1/2 SOC
25	1	1335797	BRKT,SUPPORT	67	2	SSSC90024	#8-32 X 3/8 SOC
26	1	1335864	BRACKET	68	5	SSSC98024	#10-32 X 3/8 SOC
27	1	1335897	PLATE,NUT,1/4-20	69	3	SSSC98040	#10-32 X 5/8 SOC
28	1	33008708	DISC ASSY,8"	70	1	SSSC98048	#10-32 X 3/4 SOC
29	1	AAC8DP-3	CYLINDER,AIR,DA	71	1	SSW#10	WING SCREW
30	5	AAF1/8	1/8" PLASTIC CLAMP	72	5	SSZS93032	SCREW, SHT
31	1	AAFBP-8C	BRKT,PIVOT,5/32	73	1	TTH32415	HANDLE,THDED
32	1	AAQME-5-10	ELBOW, MALE	74	2	WWF4	WASHER, FLAT
33	1	BBAW-3Z	BRG,ROD END	75	32	WWFS1/4	WASHER FLAT
34	2	BBNTA613	BEARING,THRUST	76	6	WWFS3/8	WASHER, FLAT
35	2	BBS8701-88	BEARING,BALL	77	1	WWFS5/16	WASHER, FLAT
36	4	BBTRA613	WASHER,THRUST	78	9	WWFS10	WASHER, FLAT
37	2	CCCL8F	CLAMP COLLAR	79	16	WWL1/4	1/4 LW
38	1	FFQM42VN6A	EYE,ELECTRIC,10-30	80	3	WWL3/8	3/8 LW
39	1	GG157L050	BELT,GEAR,3/8P,1/2W	81	1	WWL5/16	5/16 LW
40	2	MM132-1496	PLUG 1 X 2	82	2	WWL8	#8 LW
41	1	MMFB4444	FOOT, RUBBER	83	8	WWL10	#10 LW
42	1	NNE3/8-16	PULLEY, 3/8P, 12T				

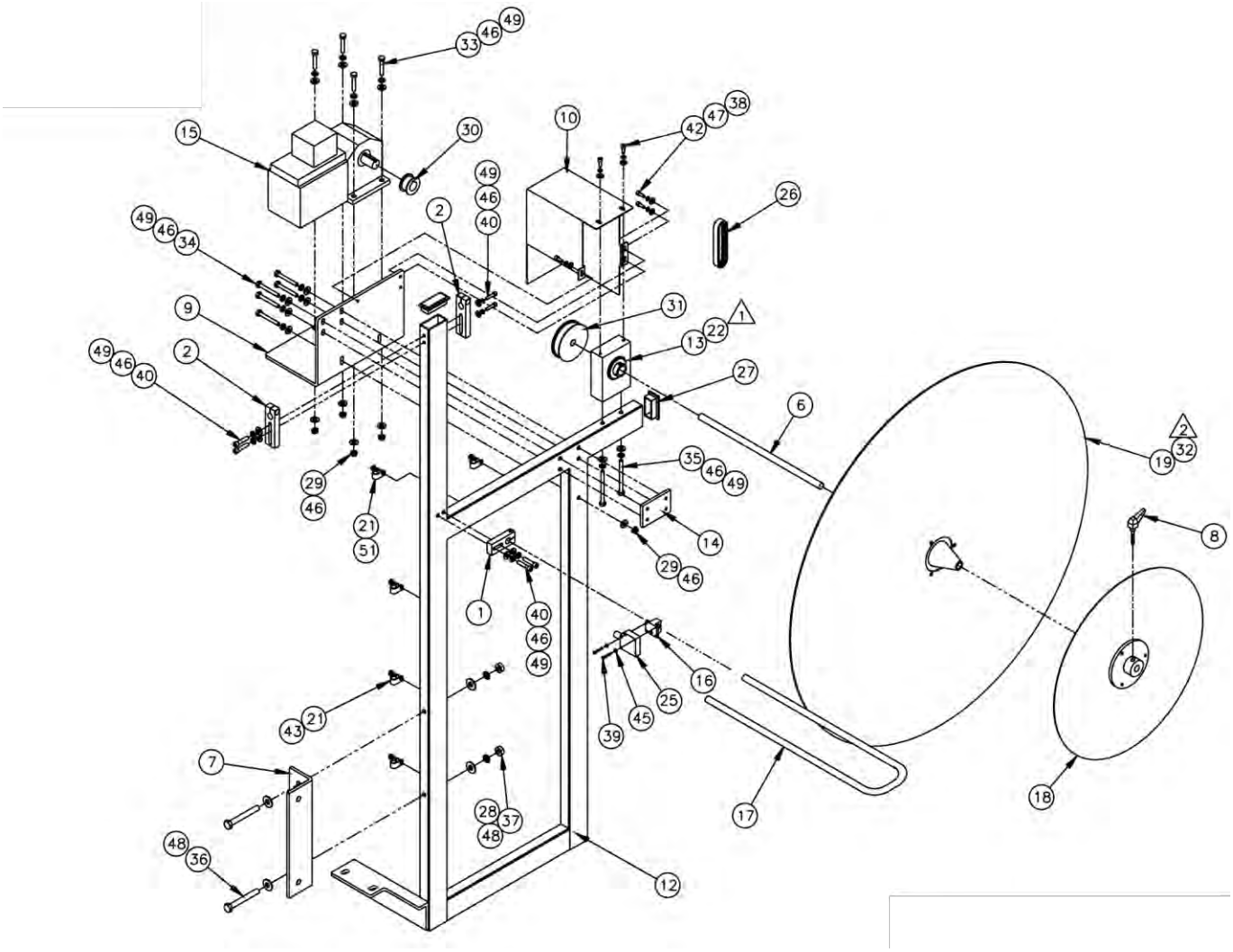
49
46
33
15
30
10
42
47
38
49
46
40
2
26
49
46
34
31
1
22
13
9
27
2
49
46
40
6
2
32
19
35
46
49
29
46
21
51
14
8
29
46
1
40
46
49
16
25
45
39
21
43
7
28
37
48
48
36
12
17
18

1335M-4000A Unwinder Assembly

AAC Drawing Number 192821C Rev0

NO.	QTY	PART #	DESCRIPTION	NO.	QTY	PART #	DESCRIPTION
1	1	1325-346	Rod Holder, 1/2	29	5	NNK1/4-20	Kep Nut
2	2	1325-346A	Rod Holder, 3/4	30	1	PP12LF050-3/4	Gear Pulley
6	1	1335M-4002A	Shaft, 3/4 x 22	31	1	PP24LB050M3	Gear Pulley
7	1	1335M-4003A	Support Brkt	32	1	SSHC01048	Screw, Hex Cap
8	1	TTH32415	Threaded Handle	33	4	SSHC01080	Screw, Hex Cap
9	1	1335M-4006	Motor Mount	34	5	SSHC01112	Screw, Hex Cap
10	1	1335M-4007	Belt Cover	35	2	SSHC01160	Screw, Hex Cap
12	1	1335M-4100A	Frame Weldment	36	2	SSHC25160	Screw, Hex Cap
13	1	1961-365	Bearing Block	37	2	WWL3/8	Lock Washer
14	1	1961-370	Nut Plate	38	5	WWL10	Lock Washer
15	1	23218DM	Motor Assy	39	2	SSPS70048	Screw, Pan Head
16	1	265155A	Eye Holder	40	6	SSSC01064	Screw, Socket Cap
17	1	1335-837	Rod, 1/2 U	42	5	SSSC98024	Screw, Socket Cap
18	1	A-202-1809	18” Disc	43	3	SSZS93032	Screw, Sheet Metal
19	1	A-202-3209	32” Disc	45	2	WWF4	Flat Washer
21	5	AAF1/8	Plastic Clamp	46	22	WWFS1/4	Flat Washer
22	2	BBS8703-88	Ball Bearing	47	5	WWFS10	Flat Washer
25	1	FFQM42VN6A	Electric Eye	48	4	WWFS3/8	Flat Washer
26	1	GG187L050	Gear Belt	49	17	WWL1/4	Lock Washer
27	2	MM132-1496	End Cap	51	2	SSPS90032	Screw, Pan Head
28	2	NNH3/8-16	Hex Nut				

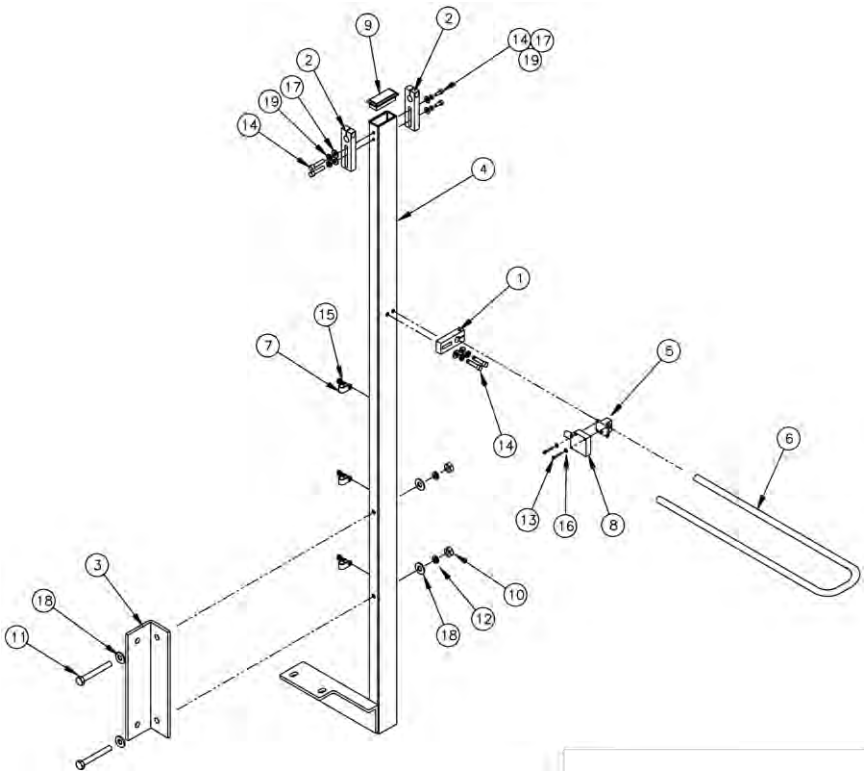

1335M-4200A Support Frame Assembly

AAC Drawing Number 192833C Rev0

NO.	QTY	PART #	DESCRIPTION
1	1	1325-346	Rod Holder, 1/2
2	2	1325-346A	Rod Holder, 3/4
3	1	1335M-4003A	Support Brkt
4	1	1335M-4201	Frame Support
5	1	265155A	Eye Holder
6	1	1335-837	Rod, 1/2 U
7	3	AAF1/8	Plastic Clamp
8	1	FFQM42VN6A	Electric Eye
9	1	MM132-1496	End Cap
10	2	NNH3/8-16	Hex Nut
11	2	SSHC25160	Screw, Hex Cap
12	2	WWL3/8	Lock Washer
13	2	SSPS70048	Screw, Pan Head
14	6	SSSC01064	Screw, Socket Cap
15	3	SSZS93032	Screw, Sheet Metal
16	2	WWF4	Flat Washer
17	6	WWFS1/4	Flat Washer
18	4	WWFS3/8	Flat Washer
19	6	WWL1/4	Lock Washer

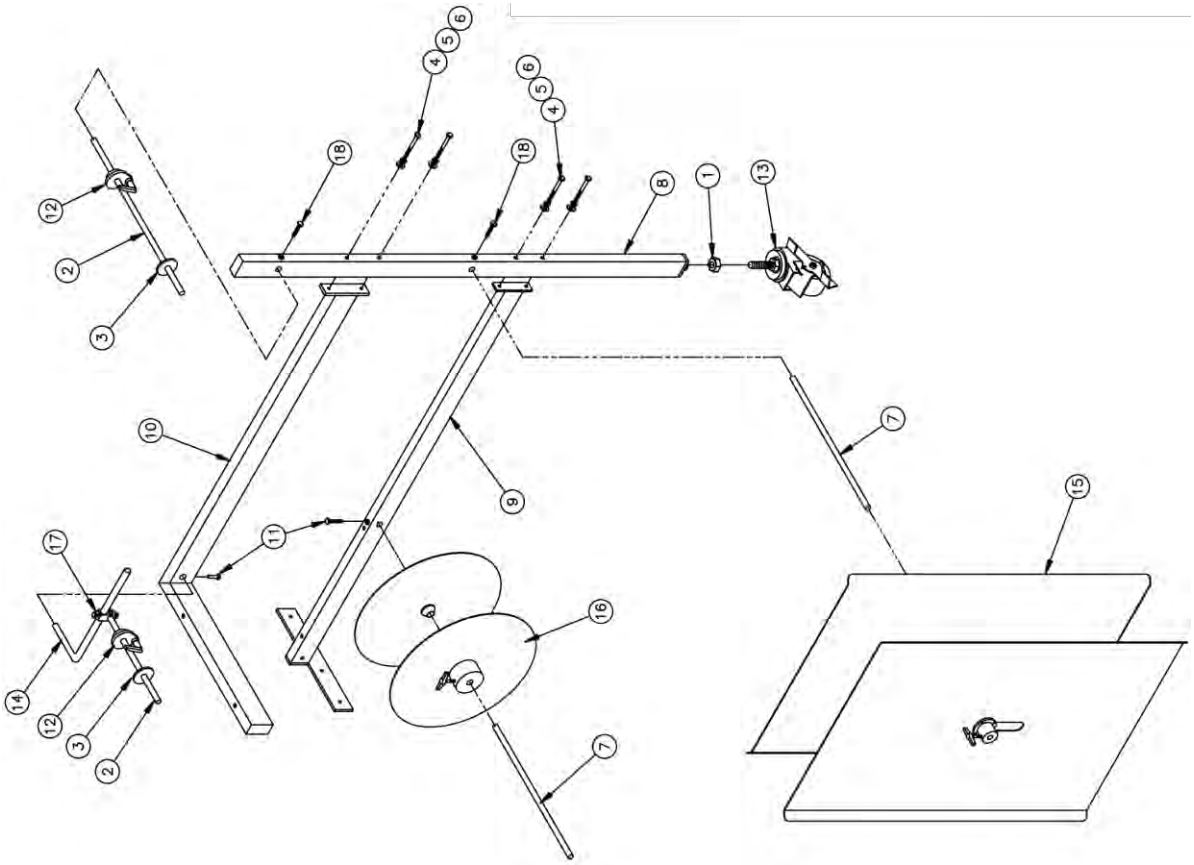

1959-800 Roll Holder Assembly

AAC Drawing Number 192739C Rev5

NO.	QTY	PART #	DESCRIPTION
1	1	NNH1/2-13	Hex Nut
2	2	1959-802	Rod, 3/8 x 28
3	2	A-4-024	Hub
4	4	SSHC01160	Screw, Hex Cap
5	4	WWL1/4	Lock Washer
6	4	WWFS1/4	Flat Washer
7	2	1959-101	Rod, 1/4 x 17
8	1	1959-105	Tube Assy
9	1	1959-106B	Tube w/ Flange
10	1	1312021	Material Frame Assy
11	4	SSHC01080	Screw, Hex Cap
12	2	4009-1	Material Controler
13	1	MM503022LB	Caster
14	1	780-102	Rod, L, 1/2 x 6 x 12
15	2	785-A95-36	Disc Assy, 36”
16	2	786B16-2.2	Disc & Cone Assy
17	4	A-U	Rod Connector
18	2	SSHC10064	5/16- 18x1

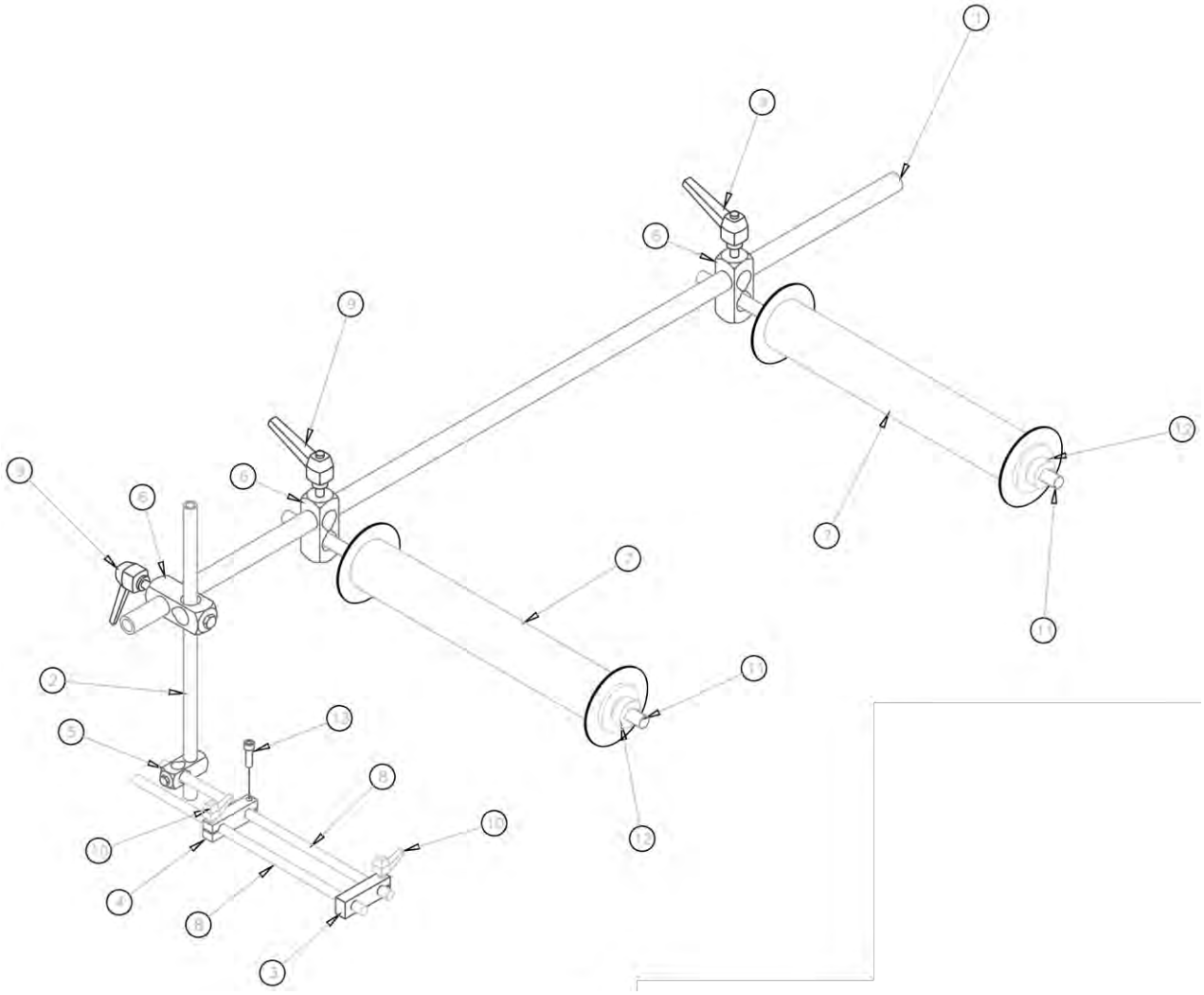

1335M-420 Guide Roller Assembly

AAC Drawing Number 192832C Rev0

NO.	QTY	PART #	DESCRIPTION
1	1	97-1711	Tube, 3/4 x 30
2	1	8732-0576	Tube, 1/2 x 9
3	1	1335-318	Rod Slide Arm
4	1	1335-319	Rod Clamp Arm
5	1	A-U	Cross Block, 1/2
6	3	28201	Cross Block, 3/4
7	2	1335-814	Roller, 2 x 9
8	2	1335-320B	Rod, 3/8 x 11 s/s
9	3	TTH32425	Threaded Handle
10	2	TTH34311	Threaded Handle
11	2	8732-0896	Rod, 1/2 x 14
12	2	CCCL8F	Clamp Collar
13	1	SSSC95048	Screw, Socket Cap

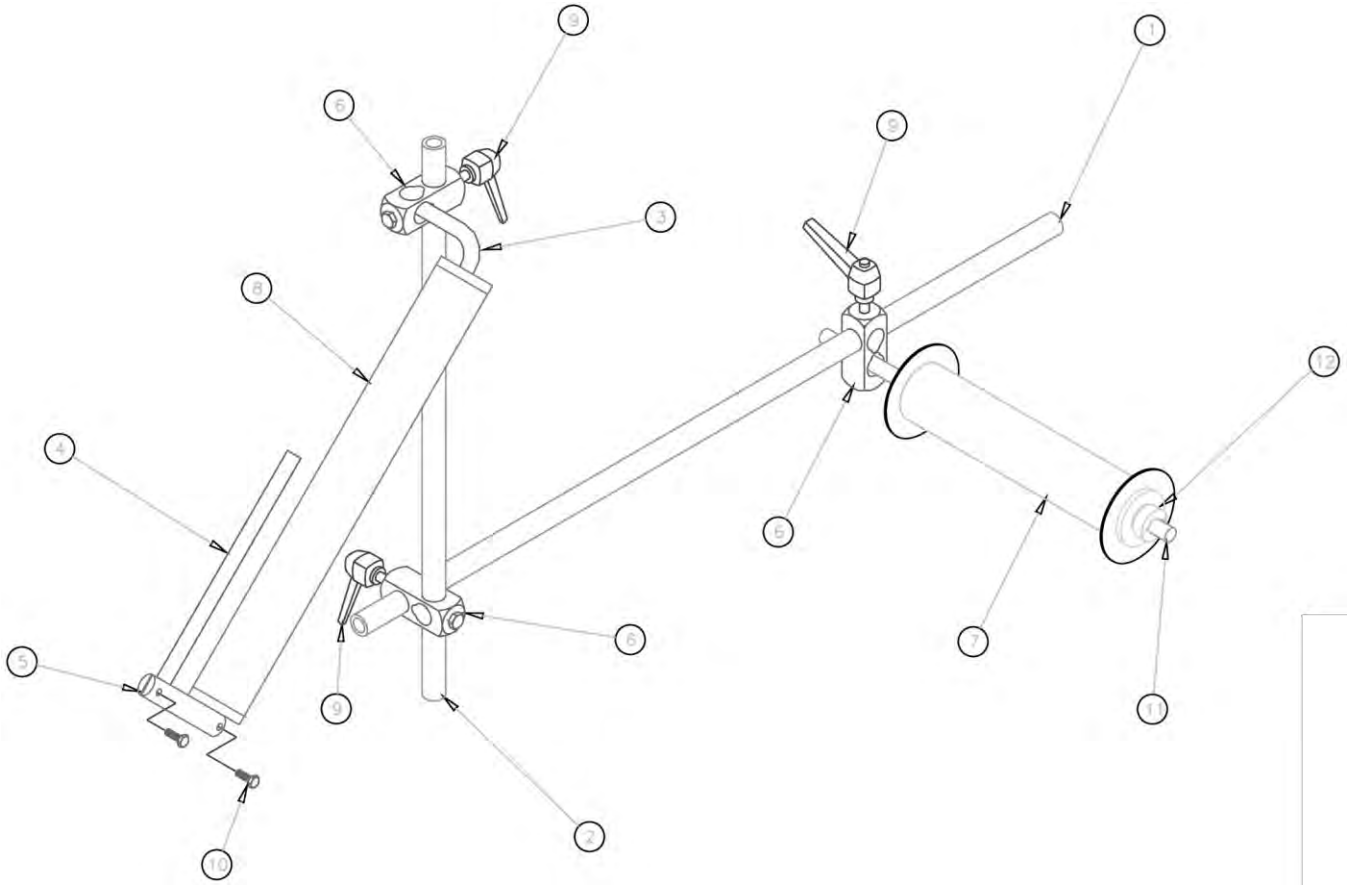

1335M-425 Guide Roller Assembly

AAC Drawing Number 192834C Rev0

NO.	QTY	PART #	DESCRIPTION
1	1	97-1711	Tube, 3/4 x 30
2	1	97-1711A	Tube, 3/4 x 10
3	1	1335-835	Bent Rod, 1/2 x 4 x 18
4	1	8732-0576	Rod, 1/2 x 9
5	1	1335-319B	Rod Clamp, 1/2
6	3	28201	Cross Block
7	1	1335-814	Roller, 2 x 9
8	1	1335-831	Roller, 2 x 16
9	3	TTH32425	Threaded Handle
10	2	SSSC95048	Screw, Socket Cap
11	1	8732-0896	Rod, 1/2 x 14
12	1	CCCL8F	Clamp Collar

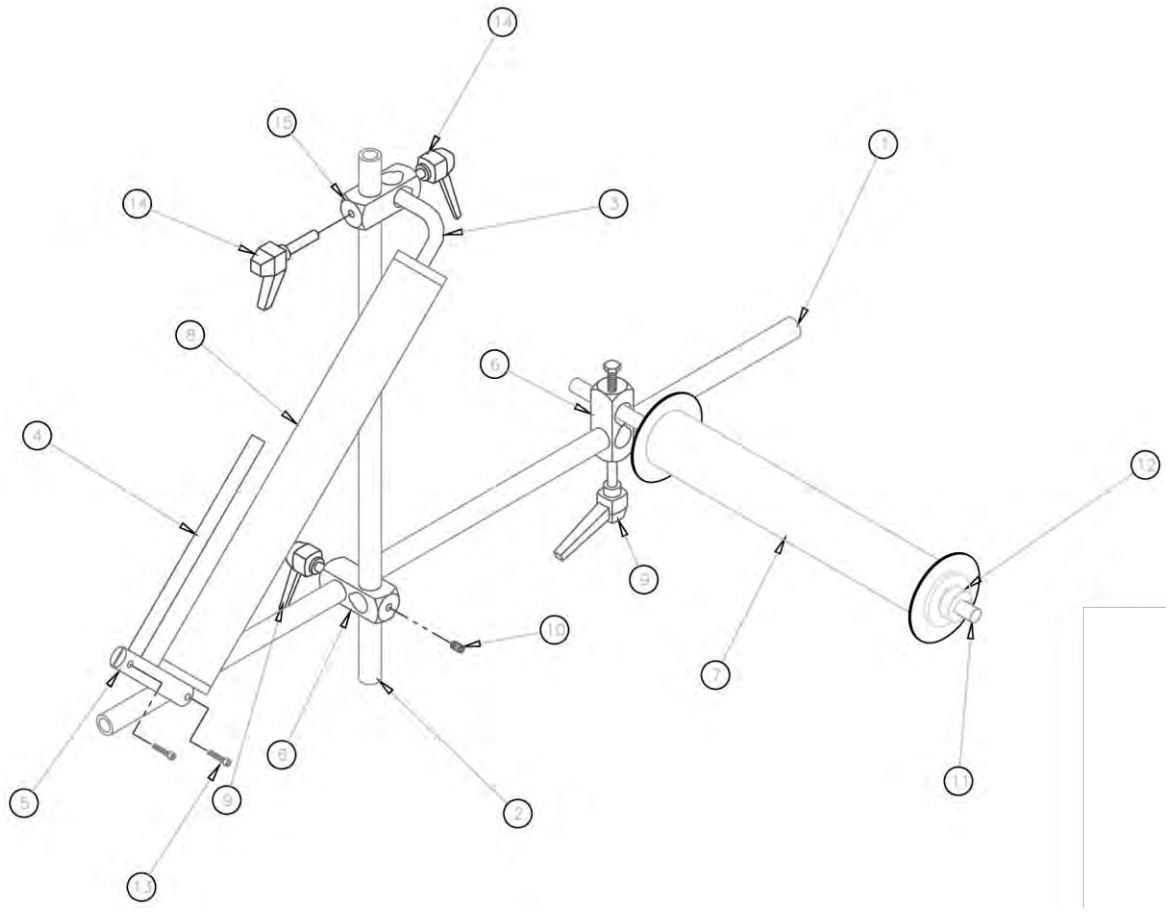

1335M-430 Guide Roller Assembly

AAC Drawing Number 192822C Rev3

NO.	QTY	PART #	DESCRIPTION
1	1	97-1711	Tube, 3/4 x 30
2	1	97-1711C	Tube, 3/4 x 14
3	1	1335-835A	Bent Rod, 1/2 x 4 x 26
4	1	8732-0576	Rod, 1/2 x 9
5	1	1335-319B	Rod Clamp, 1/2
6	3	28201	Cross Block
7	1	1335-838	Roller, 2 x 18.5OL
8	1	1335-814D	Roller, 2 x 25.5OL
9	2	TTH32425	Threaded Handle
10	1	SSSS10048	Socket Cap Screw
11	1	8732-1536	Rod, 1/2 x 24
12	1	CCCL8F	Clamp Collar
13	2	SSSC95048	Screw, Socket Cap
14	2	TTH32426	Threaded Handle
15	1	28201A	Cross Block

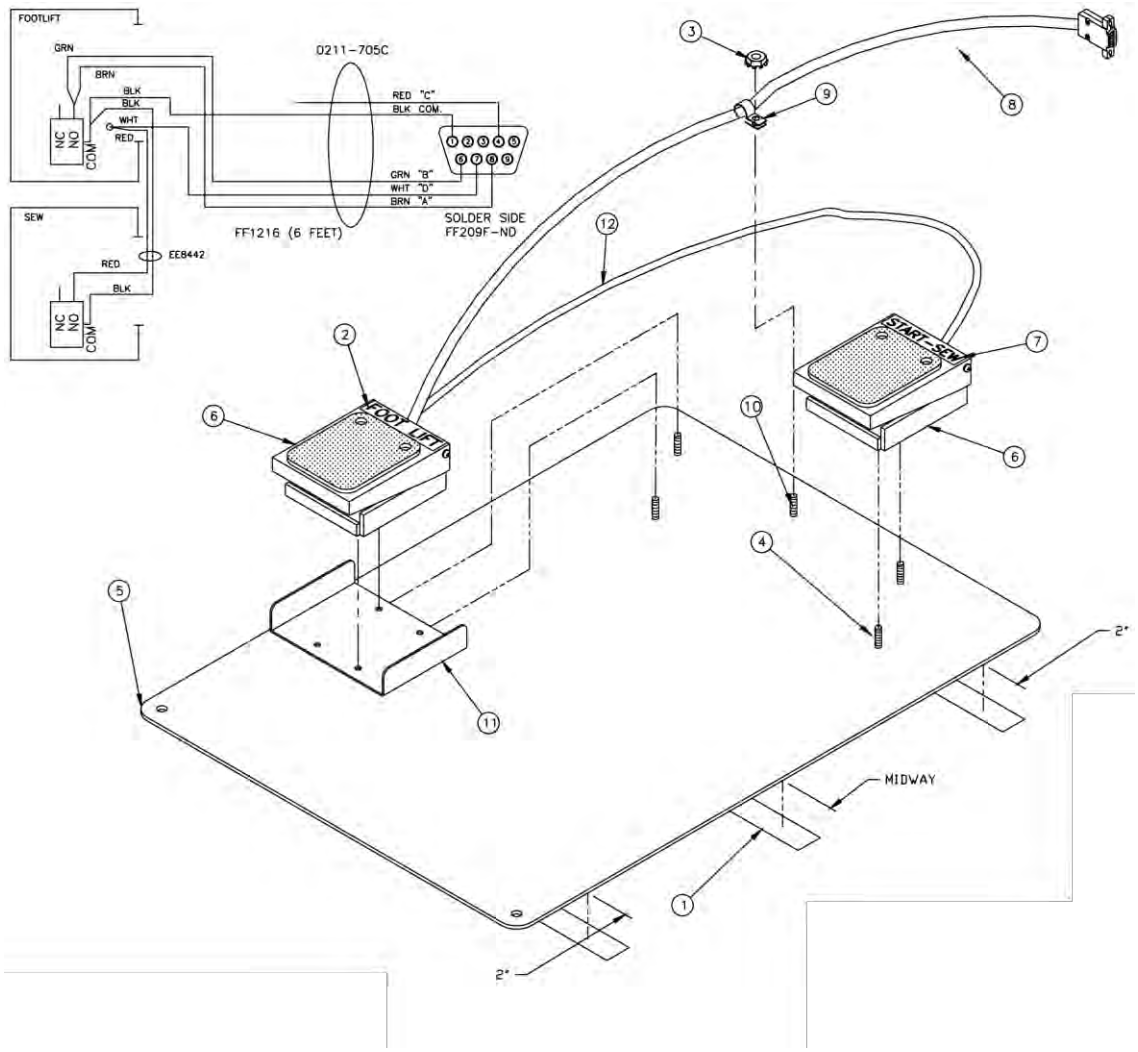

1278-6160E Foot Switch Assembly

AAC Drawing Number 192853C Rev2

NO.	QTY	PART #	DESCRIPTION
1	3'	MM6970T64	Abrasive Tape
2	AR	3844P-119B	Label
3	1	NNK6-32	Kep Nut
4	4	SSFC80016	Screw, Flat Allen
5	1	1278-5051B	Plate
6	2	1278-6161	Foot Pedal Mod.
7	AR	3844P-119A	Label
8	1	0211-705C	Cable
9	1	AAF3/8	Plastic Clamp
10	1	SSFC80024	Screw, Flat Allen
11	1	132556-010E	Guard
12	1	EE8442	Cable

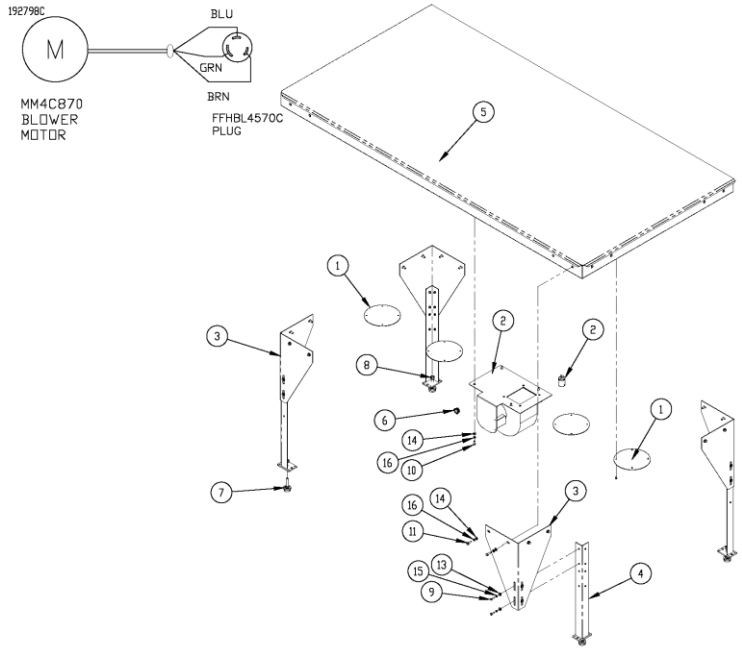

1337A-160 Air Table Assembly

AAC Drawing Number 1337296 Rev8

NO.	QTY.	PART#	DESCRIPTION
1	4	1335-159	ACCESS COVER
2	1	1337135	BLOWER ASSY
3	4	1337A-0161	ANGLE, CORNER
4	4	1337A-0163	WELDMENT, LEG, TABLE
5	1	1337A-150	AIR TABLE ASSY
6	1	K-235	CONNECTOR,ROMEX,1/2"
7	4	MMFB4444	FOOT, RUBBER
8	4	NNH1/2-13	NUT,HEX,1/2-13
9	16	SSHC01048	1/4-20 X 3/4 HEX CAP
10	4	SSHC10048	5/16-18 X 3/4 HHCS
11	16	SSHC10064	5/16-18 X 1 HHCS
12	16	SSZH#10032	SCREW,SHT.METAL HEX 10
13	16	WWF1/4	WASHER, FLAT, 1/4", COM
14	20	WWFS5/16	WASHER,FLAT,SAE,5/16
15	16	WWL1/4	WASHER,LOCK,1/4
16	20	WWL5/16	WASHER, LOCK, 5/16

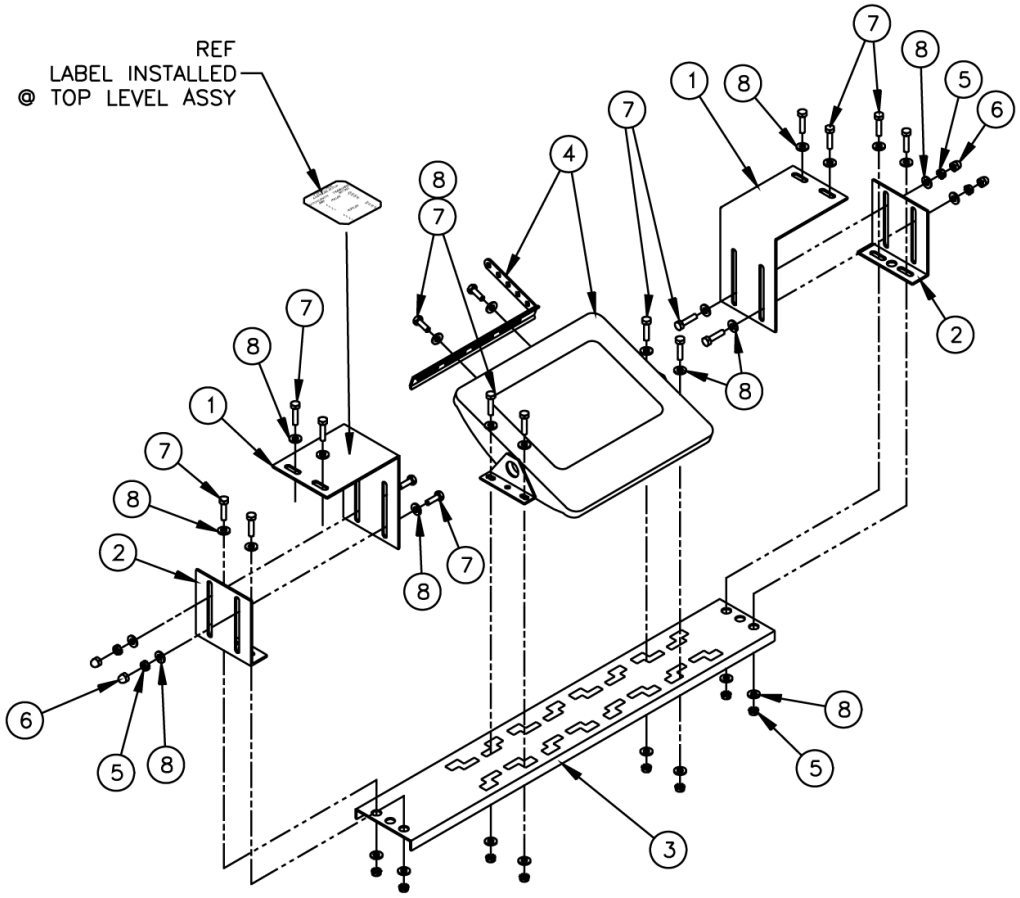

1335M-1005 Sit-Down Treadle Assembly

AAC Drawing Number 192857C Rev1

NO.	QTY	PART #	DESCRIPTION
1	2	1335M-105	Treadle Brkt
2	2	160929A	Show Stand Brkt
3	1	K-100-30M	Treadle Brace
4	1	K-340	Threadle W/BRKT
5	12	NNK1/4-20	Kep Nut
6	4	NNC1/4-20	Cap Nut
7	18	SSHC01048	Screw, Hex Cap
8	30	WWFS1/4	Flat Washer

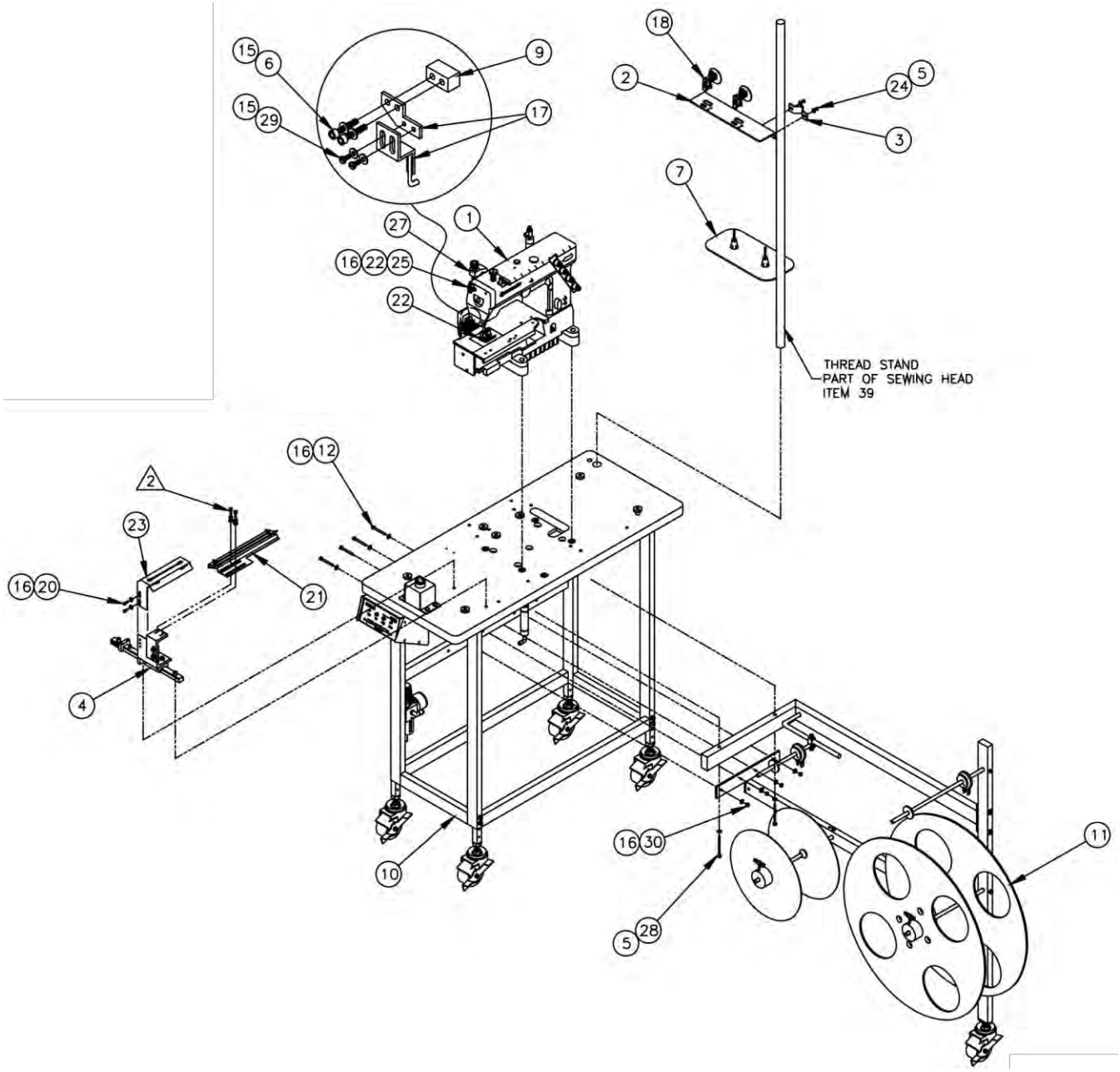
THREAD STAND
PART OF SEWING HEAD
ITEM 39

1334S-01 Auto Flanging Workstation

AAC Drawing Number 192761C Rev4

NO.	QTY	PART #	DESCRIPTION
1	1	1334-1000A	Sewing Head
2	1	0411-069B	Thread Break Brkt
3	1	0411-070	Clamp, Sensor Brkt
4	1	1334-1100C	Folder Mount
5	4	WWFS10	Flat Washer
6	AR	WW000538	Washer
7	1	1959-112	Thread Plate
8	1	1334-3011	Cable
9	1	1959-025	Spacer
10	1	1959-700A	Table & Frame
11	1	1959-800	Roll Holder
12	4	SSHC01128	Screw, Hex Cap
13	AR	1959-PD	Pneumatic Diagram
14	AR	1334S-01WD	Wiring Diagram
15	AR	SSSCM4X20	Screw, Socket Cap
16	12	WWFS1/4	Flat Washer
17	1	3151010	Wiper
18	2	4003-IS3WT2	Sensor
19	1	4003-MA3/FE	Cable
20	2	SSSC01048	Socket Cap Screw
21	1	661-A18-5/16	Folder
22	2	SSSCM6X20	Socket Cap Screw
23	1	661-A19	Guide, Adj Flange
24	2	SSPS98024	Screw, Pan Head
25	1	AA2000F-03	Flow Control
26	1	AATPWL1	Wire Loom
27	1	RRLC105J10	Spring
28	2	SSZH#10192	Screw, Sheet Metal
29	AR	SSM110009	Screw, Throat Plate
30	4	NNK1/4-20	Kep Nut

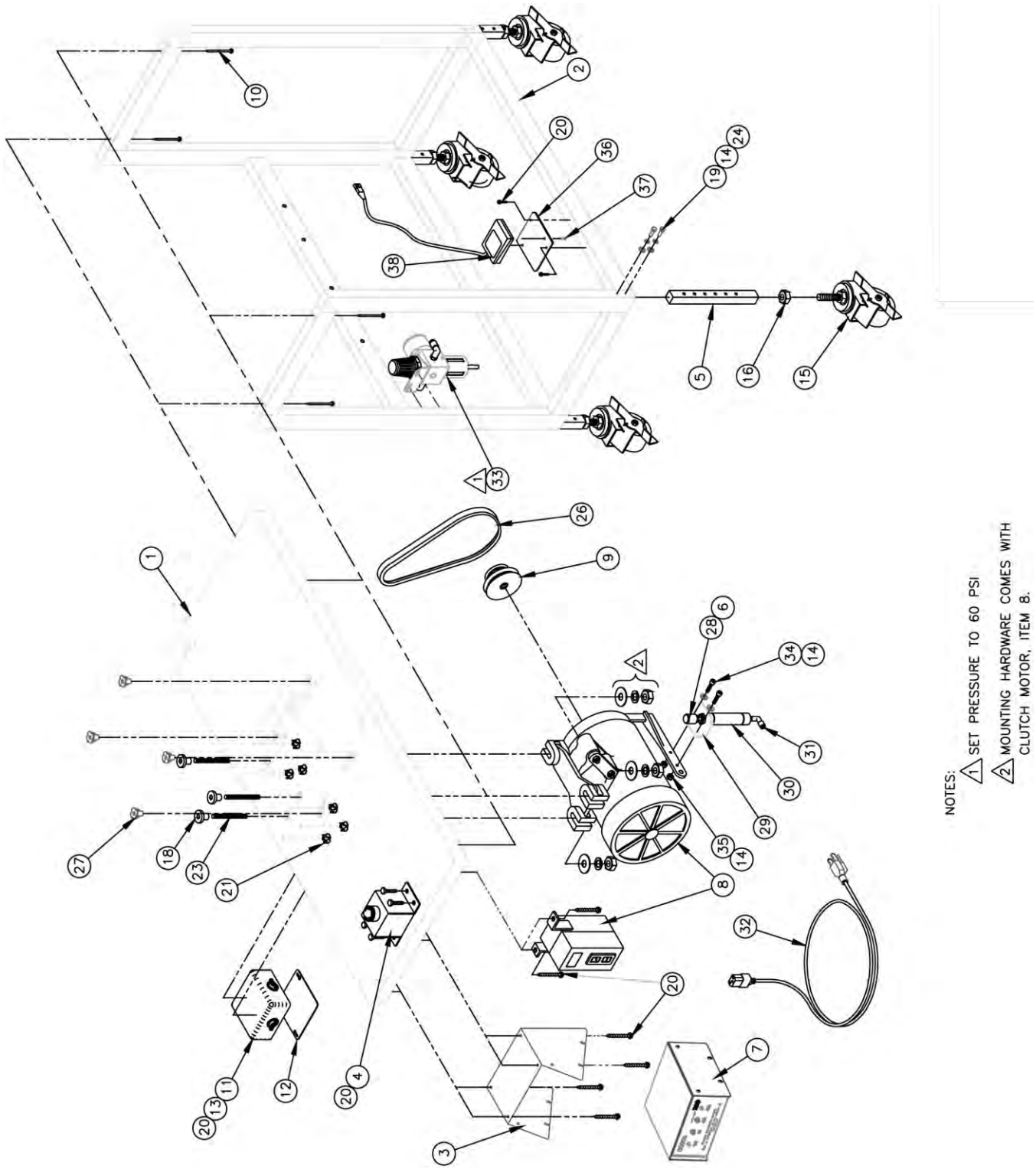
NOTES:
1. SET PRESSURE TO 60 PSI
2. MOUNTING HARDWARE COMES WITH CLUTCH MOTOR, ITEM 8.

1959-700A Table & Frame Assembly

AAC Drawing Number 192766C Rev3

NO.	QTY	PART #	DESCRIPTION
1	1	1959-004	Table Top
2	1	1959-110	Stand
3	1	1959-120	Mount Brkt
4	1	213-005	Stop Button
5	4	26127	Leg
6	1	NNJ1/4-20	Jam Nut
7	1	4000D1-500	Control Box
8	1	4058-2	Motor
9	1	PPM616	Pulley
10	4	SSZH#10192	Sheet Metal Screw
11	1	K-233	Electical box
12	1	K-234	Cover
13	3	K-235	Romex Connector
14	12	WWFS1/4	Flat Washer
15	4	MM503022LB	Caster
16	4	NNH1/2-13	Hex Nut
17	7	NNH5/16-18	Hex Nut
18	7	NNM103	Recessed Nut
19	8	SSHC01048	Screw, Hex Cap
20	12	SSZH#10064	Screw, Sheet Metal
21	6	TTIW1/4-20	Threaded Insert
22	7	WWF5/16	Flat Washer
23	3	010-054	Threaded Rod
24	8	WWL1/4	Lock Washer
25	7	WWL5/16	Lock Washer
26	1	ZX3836	Belt
27	4	TTIW3/8-16	Recessed Nut
28	1	11200	Bumper
29	1	97-2602	Clutch Cylinder Brkt
30	1	AAC7DP-2	Air Cylinder
31	1	AAQME-5-8	Quick Male Elbow
32	1	EE37F3311	Power Cord
33	1	AA198-5/32	Air Regulator
34	2	SSSC01048	Screw, Socket Cap
35	2	NNK1/4-20	Kep Nut
36	1	1961-159	Foot Pedal Plate
37	2	SSFC80016	Flat Allen Screw
38	1	EE24F163	Foot Switch
39	AR	1334S-01WD	Wiring Diagram

Page 100

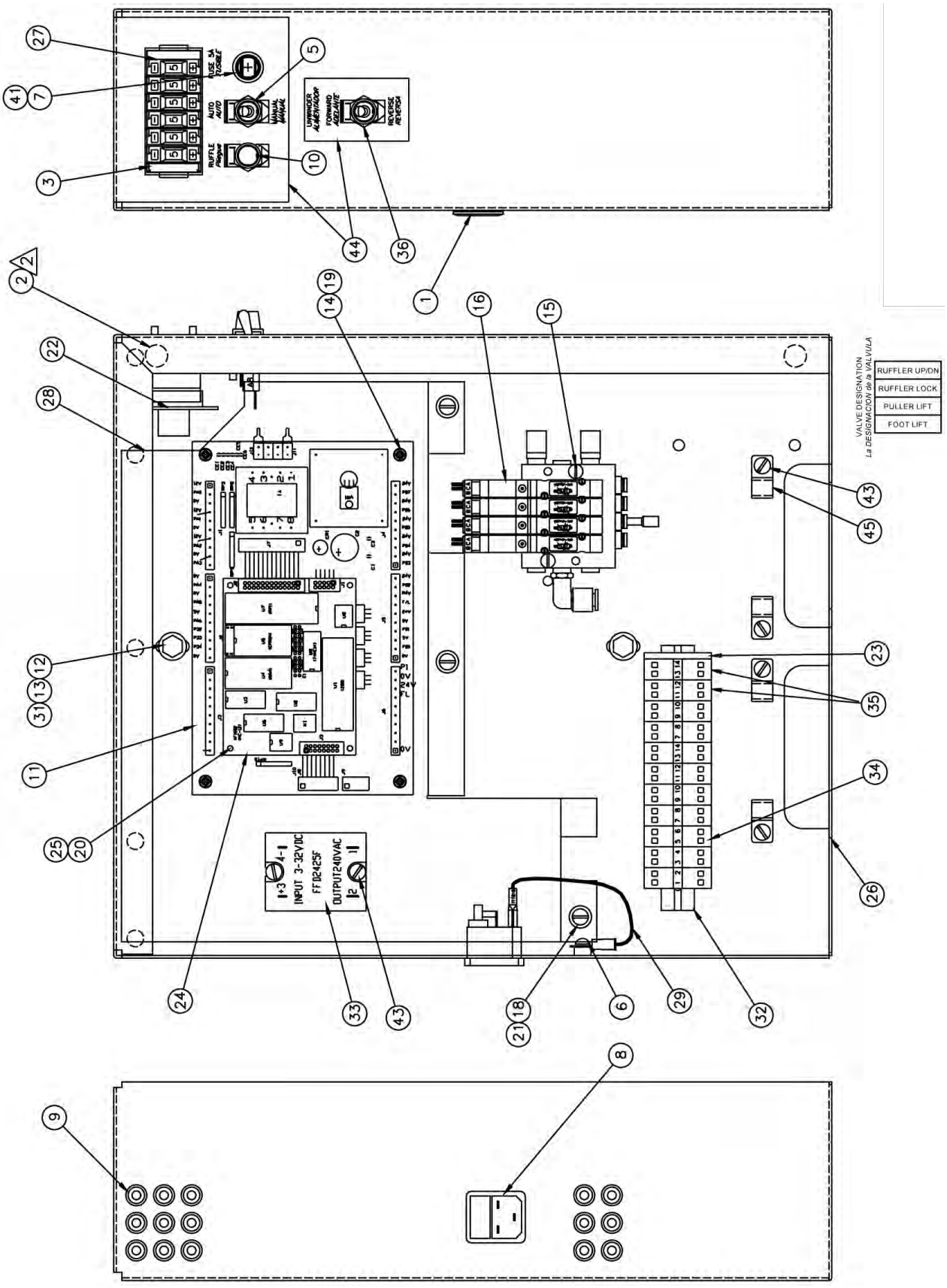
VALVE DESIGNATION
La DESIGNACION de la VALVULA
RUFFLER UP/DN
RUFFLER LOCK
PULLER LIFT
FOOT LIFT
INPUT 3-32VDC
OUTPUT240VAC

1335M-500 Control Box Assembly

AAC Drawing Number 192692C Rev9

NO.	QTY	PART #	DESCRIPTION	NO.	QTY	PART #	DESCRIPTION
1	1	MM40450010	Slide Lock	27	6	FFC5.2LST1	Thumb Wheel Switches
2	2	MMSLD-ECH	Bumper	28	1	1335M-501	Control Box Cover
3	1	FFC5S1	End Cap	29	1	1981A-511	Ground Wire
4	1	1987149F3	Cable	30	1	EE37F3312	Power Cord
5	1	FF23F385	Toggle Switch	31	2	WWFS1/4	Flat Washer
6	1	SSPS98016	Screw, Pan Head	32	1	FF264-3BKT6	Wago Mount
7	1	FF342838A	Fuse Holder	33	1	FFD2425F	Solid State Relay
8	1	FF10ESB1C	Power Conn.	34	9	FF264-341	Wago, Dual, Grey
9	15	EESB-375-3	Heyco Bushing	35	2	FF264-347	Wago, Dual, Green
10	1	FF23F118	Push Button Switch	36	1	FF34576Q	Toggle Switch
11	1	1987-149JC	PC Board	37	2	0211-703	Cable
12	2	WWL1/4	Lock Washer	38	1	0211-705C	Treadle Cable
13	2	SSHC01032	Screw, Hex Cap	39	1	0211-705D	Remote Cable
14	4	SSPP80016	Screw, Pan Phillips	40	3	0411-1906	Prox Switch Cable
15	2	SSPS90080	Screw, Pan Head	41	1	FF313005	Fuse, 5A, Slow
16	1	AAE211E-4	Solenoid Assy	42	AR	1335M-500WD	Wiring Diagram
17	1	1987-513A	Cable	43	4	SSPS90024	Screw, Pan Head
18	5	WWFS10	Flat Washer	44	AR	1335M-LAB1	Label
19	4	FF67F4079	Threaded Spacer	45	4	AAF1/8	Plastic Clamp
20	4	FF89F2608	Spacer	46	1	AP-28-610U	Jog Cable
21	5	SSPS98024	Screw, Pan Head	47	1	AP-28-612L	Sync Cable
22	1	1987-517	PC Board	48	1	FF250LA40A	Metal Oxide Varistor
23	1	FF264-371	Wago, End Cap	49	2	FFRK44T-4	Eye Cable
24	1	FF1035-02	PC Board	50	1	1987149F	Cable
25	4	SSPP80096	Screw, Pan Phillips	51	AR	FF1024A-PGM	Pot Settings
26	1	1335M-505	Control Box Weldment				

Page 97

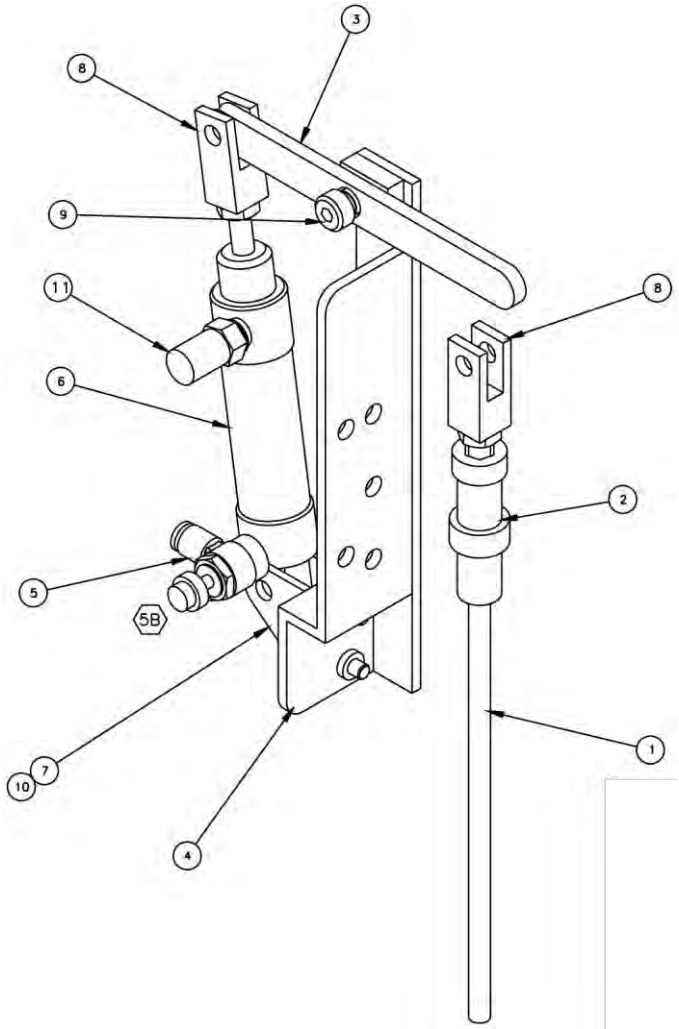

1335M-113 Foot Pressure Assembly

AAC Drawing Number 192700A Rev1

NO.	QTY	PART #	DESCRIPTION
1	1	1335M-106	Pressure Rod
2	1	1335M-107	Knob, Modified
3	1	1335M-108	Lever
4	1	1335M-112	Mount Brkt
5	1	AA198RR508	Flow Control
6	1	AAC7DP-.5	Air Cylinder
7	1	AAFBP-11C	Pivot Brkt
8	2	AAFCT-7	Clevis
9	1	SSAS020024	Screw, Allen Shoulder
10	2	SSPP98032	Screw, Pan Phillips
11	1	AAFP18	Muffler

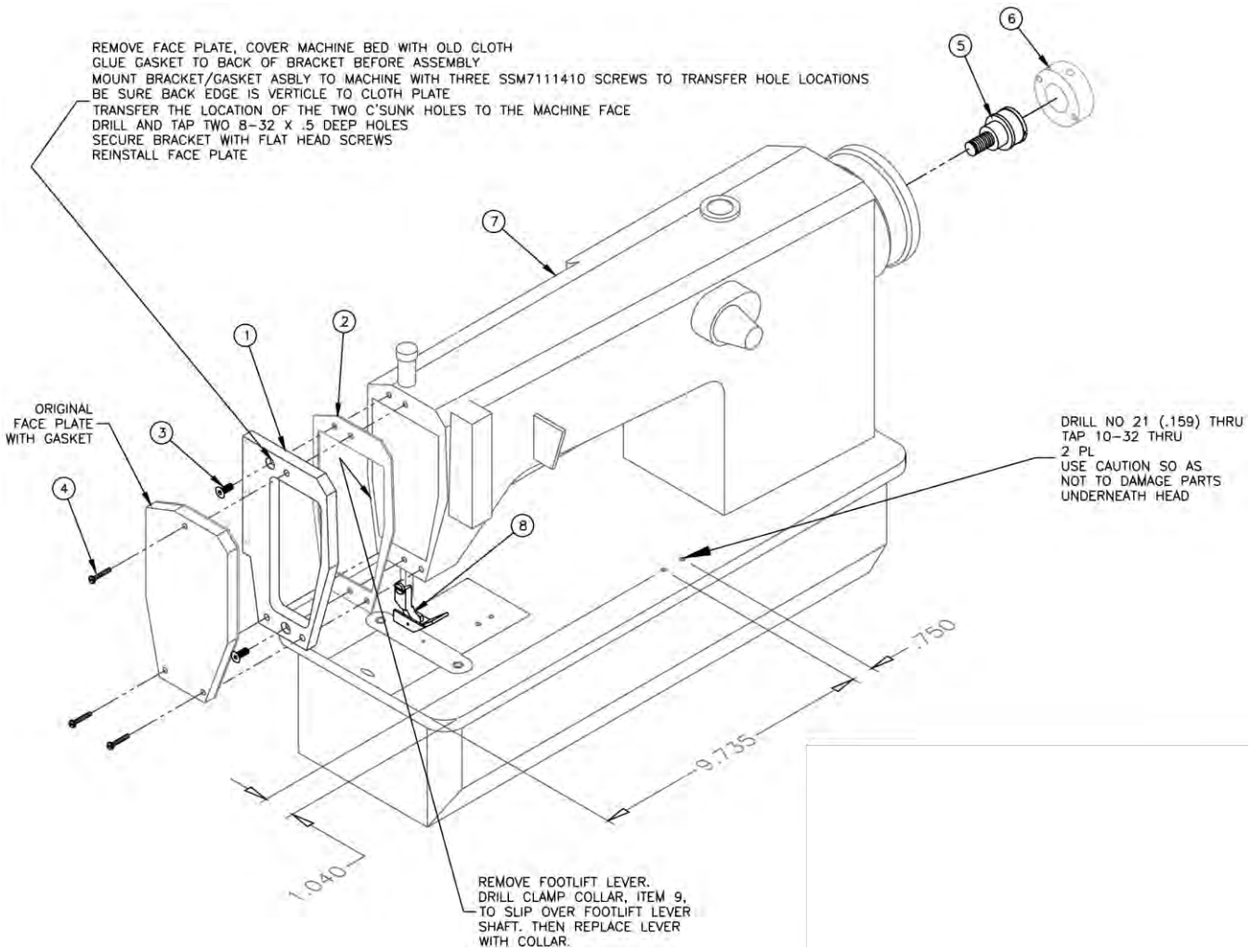

1335MD-10 Sewing Head Modification

AAC Drawing Number 192862C Rev1

NO.	QTY	PART #	DESCRIPTION
1	1	1335M-3009	Brkt
2	1	B1122552000	Gasket
3	2	SSFC90048	Screw, Flat Allen
4	3	SSM50267	Screw, Fillister Head
5	1	22100-019	Sync Adapter
6	1	1278-6364	Tape Mount Disc
7	1	SJUKI-481U	Sewing Head
8	1	M1191-019	Foot Ruffler, SN,NF
9	1	CCCL4F	Clamp Collar 1/4 in.

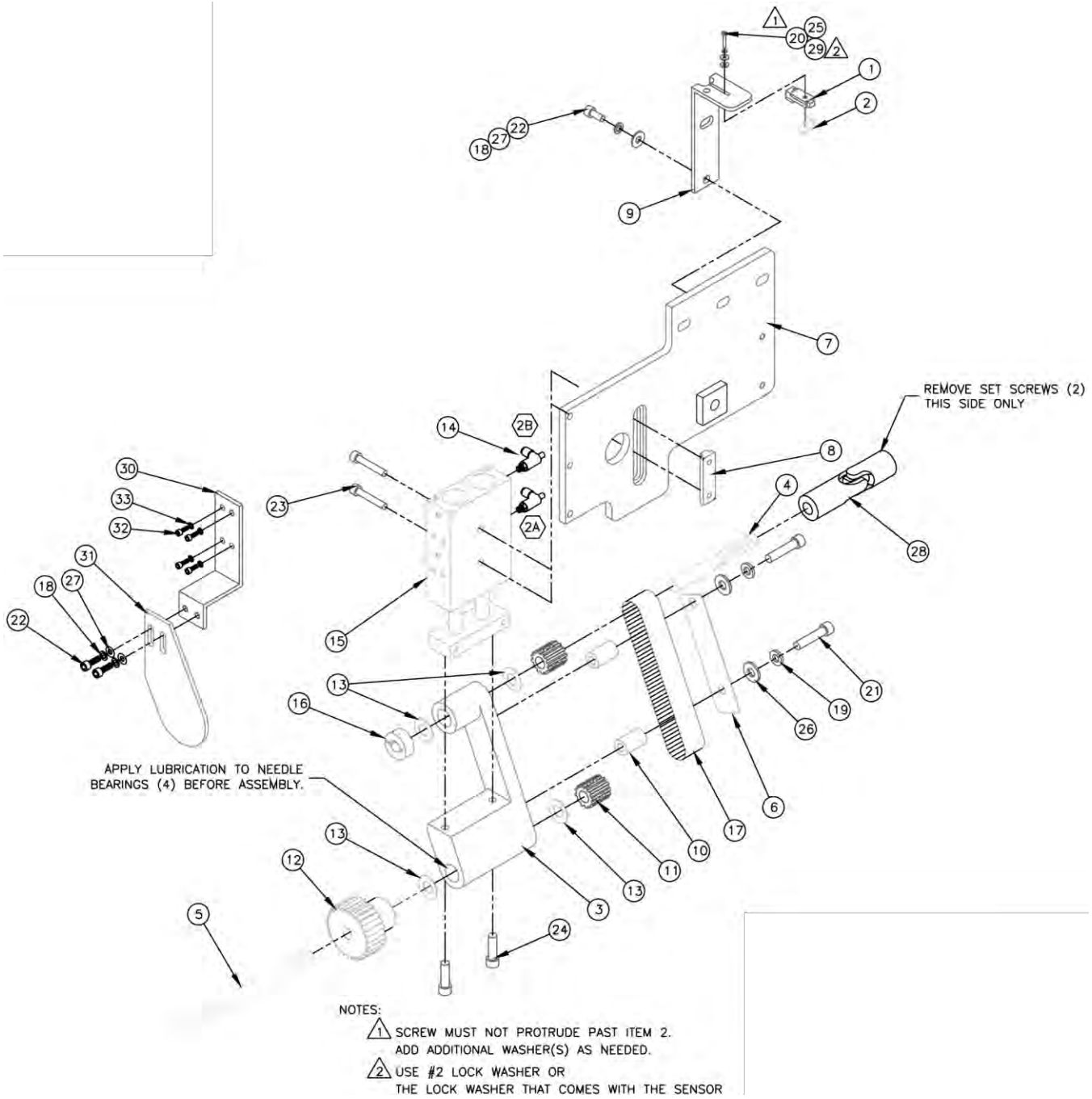
REMOVE SET SCREWS (2)
THIS SIDE ONLY
APPLY LUBRICATION TO NEEDLE
BEARINGS (4) BEFORE ASSEMBLY.
NOTES:
1 SCREW MUST NOT PROTRUDE PAST ITEM 2.
ADD ADDITIONAL WASHER(S) AS NEEDED.
2 USE #2 LOCK WASHER OR
THE LOCK WASHER THAT COMES WITH THE SENSOR

1335MD-3000A Puller Assembly

AAC Drawing Number 192863C Rev3

NO.	QTY	PART #	DESCRIPTION
1	1	1278-7055D	Prox Switch
2	1	1335M-2034	Nut Plate
3	1	1335M-3001	Roller Drive Yoke
4	1	1335M-3002	Shaft, .375 x 3.38
5	1	1335M-3003	Shaft, .375 x 5.33
6	1	1335M-3004	Belt Cover
7	1	1335M-3010	Cylinder Mount Bracket
8	1	1335M-3007	T-Nut
9	1	1335M-3008	Sensor Bracket
10	2	1535-241	Transfer Spacer
11	2	350196	Gear Pulley
12	1	3514-3C	Fluted Roller
13	4	3517	Thrust Washer
14	2	AA198RA510	Flow Control
15	1	AACXSM2020	Air Cylinder
16	1	CCCL6F	Clamp Collar
17	1	GG110XL75U	Gear Belt
18	1	WWL10	Lock Washer
19	2	WWL1/4	Lock Washer
20	1	SSPS50032	Screw, Pan Head
21	2	SSSC01064	Screw, Socket Cap
22	1	SSSC98024	Screw, Socket Cap
23	2	SSSC98064	Screw, Socket Cap
24	2	SSSCM5X20	Screw, Socket Cap
25	2	WWF2	Flat Washer
26	2	WWFS1/4	Flat Washer
27	1	WWFS10	Flat Washer
28	1	3524-06A	U-Joint
29	1	WWSI2	Internal Tooth Washer
30	1	1335M-312	Bracket, Guard
31	1	1335M-313	Plate, Guard
32	4	SSSCM4X10	Screw, Socket Cap
33	4	WWL8	Lock Washer

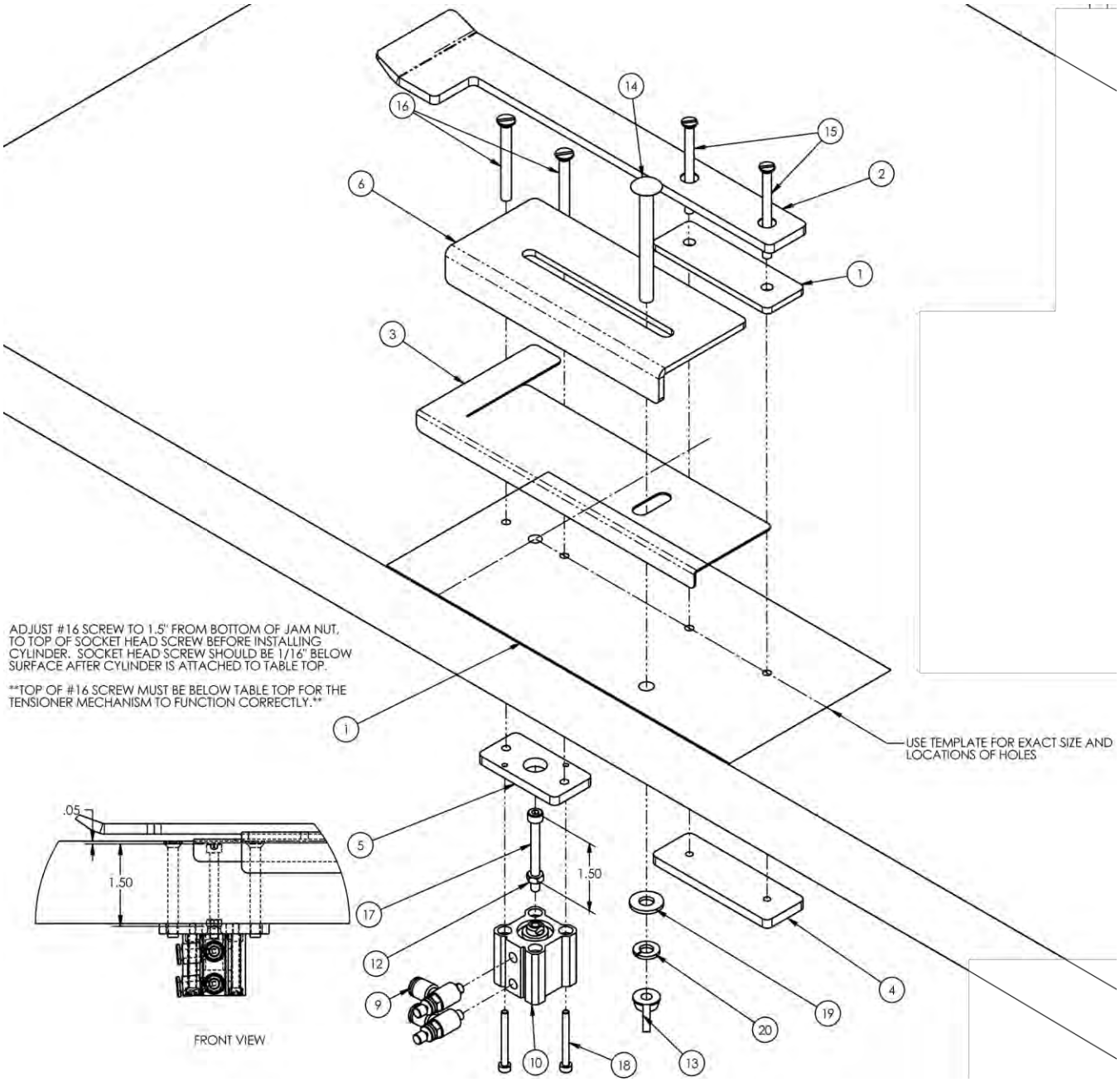
ADJUST #16 SCREW TO 1.5" FROM BOTTOM OF JAM NUT, TO TOP OF SOCKET HEAD SCREW BEFORE INSTALLING CYLINDER. SOCKET HEAD SCREW SHOULD BE 1/16" BELOW SURFACE AFTER CYLINDER IS ATTACHED TO TABLE TOP.
TOP OF #16 SCREW MUST BE BELOW TABLE TOP FOR THE TENSIONER MECHANISM TO FUNCTION CORRECTLY.
USE TEMPLATE FOR EXACT SIZE AND LOCATIONS OF HOLES
.05
1.50
1.50
FRONT VIEW
14
16
15
2
6
1
3
1
5
17
12
9
10
18
13
20
19
4

1335M-KIT105 Tensioner Kit

AAC Drawing Number 1335M-KIT105 Rev 3

NO.	QTY	PART #	DESCRIPTION
1	1	1335274	WASHER PLATE - PANEL TENS
2	1	1335275	TOP PLATE- PANEL TENSION
3	1	1335278	PANEL TENSION FINGER
4	1	1335280	NUT PLATE - PANEL TENSION
5	1	1335281	NUT PLATE - PANEL TENSION
6	1	1335284	EDGE GUIDE
7	1	1335M-PDK5	DIAG, PNEUMATIC, 1335M
8	1	1335M-TK5	TEMPLATE, TENSIONER KIT
9	2	AA198RA510	FLOW CONTROL,5/32X10-32
10	1	AACNCQ2B16-10D	COMPACT, 16MM BORE, 10MM
11	1	Console Top	NOT INCLUDED IN KIT
12	1	NNHM4X0.7	M4 X 0.7 HEX NUT
13	1	NNW1/4-20	NUT, WING, 1/4-20
14	1	SSBK01160	1/4-20 X 2 1/2 BOLT, CARG
15	2	SSFS90128	#8-32 X 2 FLAT SLOTTED
16	2	SSFS98112	#10-32 X 1-3/4 FLAT SLOT
17	1	SSSCM4X40	M4-0.7 X 40 SOC CAP
18	2	SSSCM3X30	M3-0.5 X 30 SOC CAP
19	1	WWFS1/4	WASHER FLAT, 1/4
20	1	WWL1/4	1/4 LW
NS	1	0411-071	BRKT,REGULATOR
NS	1	1335M-PDK5	DIAG, PNEUMATIC, 1335M
NS	1	1335M-TK5	TEMPLATE, TENSIONER KIT
NS	1	AA198-RP3	REGULATOR,PRECISION AIR
NS	1	AA198-503	0-30 PSI AIR GAGE 1/8NPT
NS	1	AAQUT-4-4	QUICK UNION T 1/4X1/4
NS	3	AAQUY-5-5	QUICK UNION Y 5/32
NS	4	AAQMC-5-8	QUICK MALE CONN,5/32X1/8
NS	1	AAQME-4-4	QUICK MALE EL,1/4 X1/4
NS	1	AAQME-5-4	QUICK MALE EL,5/32 X1/4
NS	1	AAV125B	VALVE, PILOT
NS	1	MM4554K11	PLUG, 1/4
NS	3	SSC90112	8-32 X 1-3/4 SHCS

Page 95

1335M-PD Pneumatic Diagram

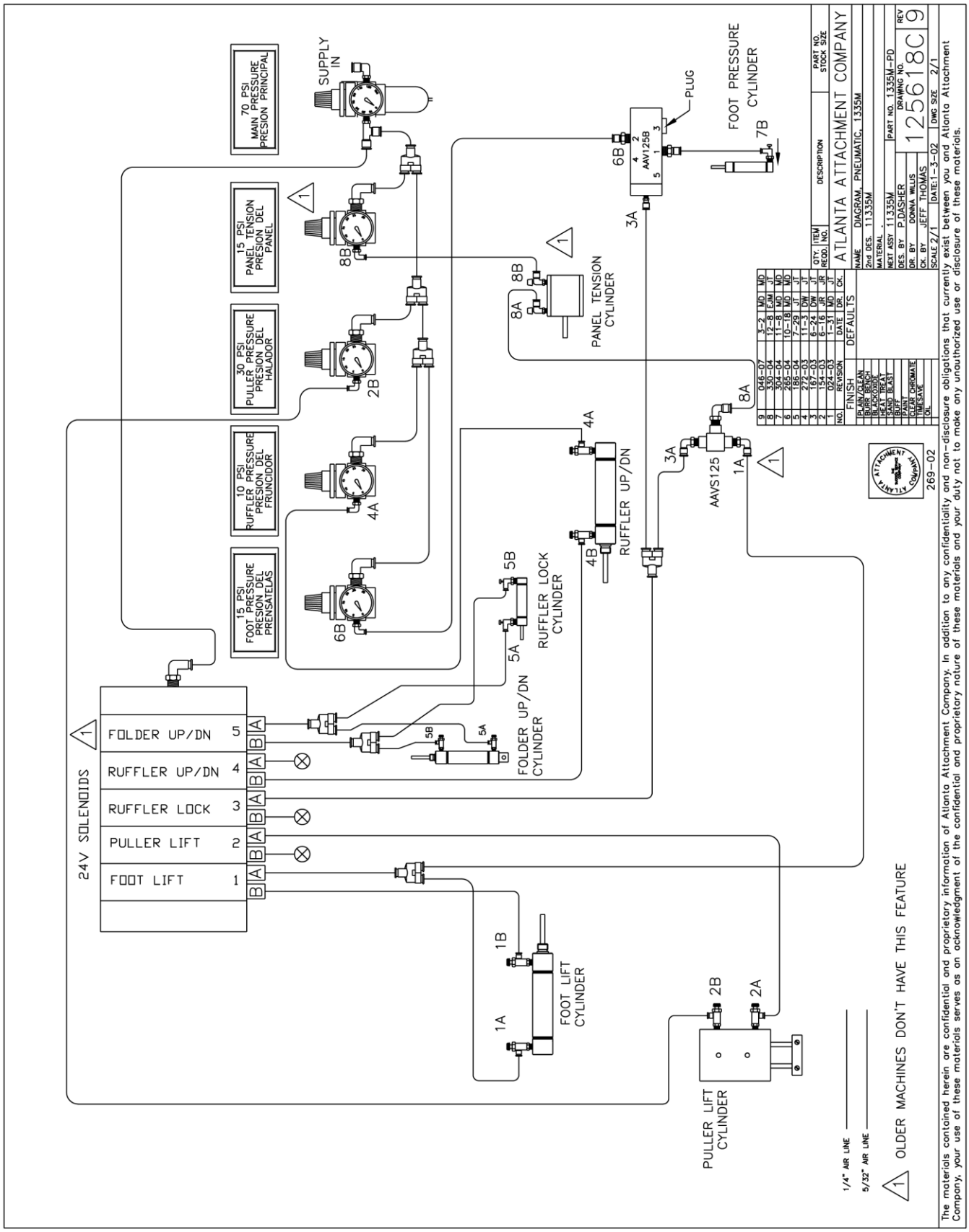

1335M-PDK5 Pneumatic Diagram

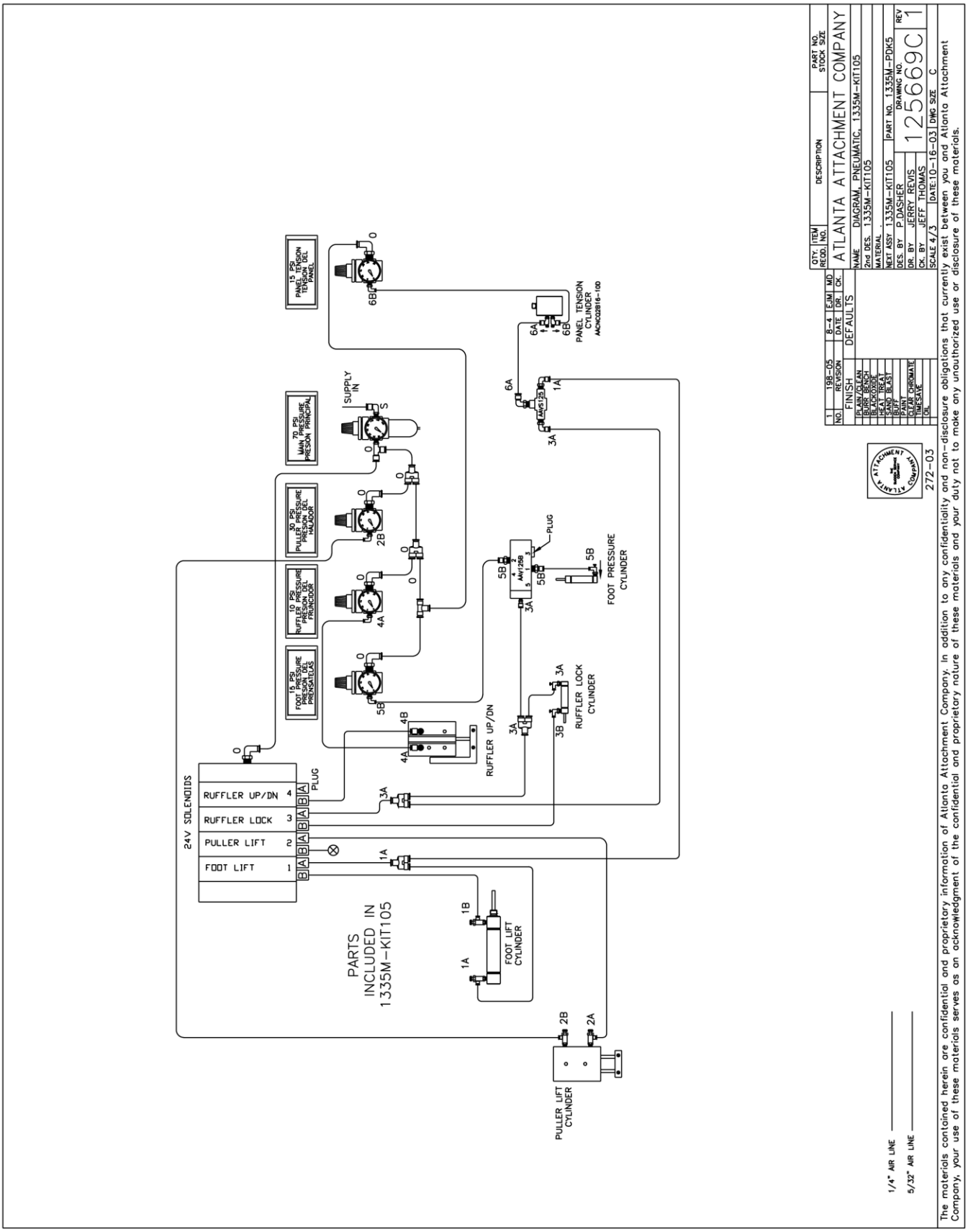

1959-PD Pneumatic Diagram, Flanging Unit

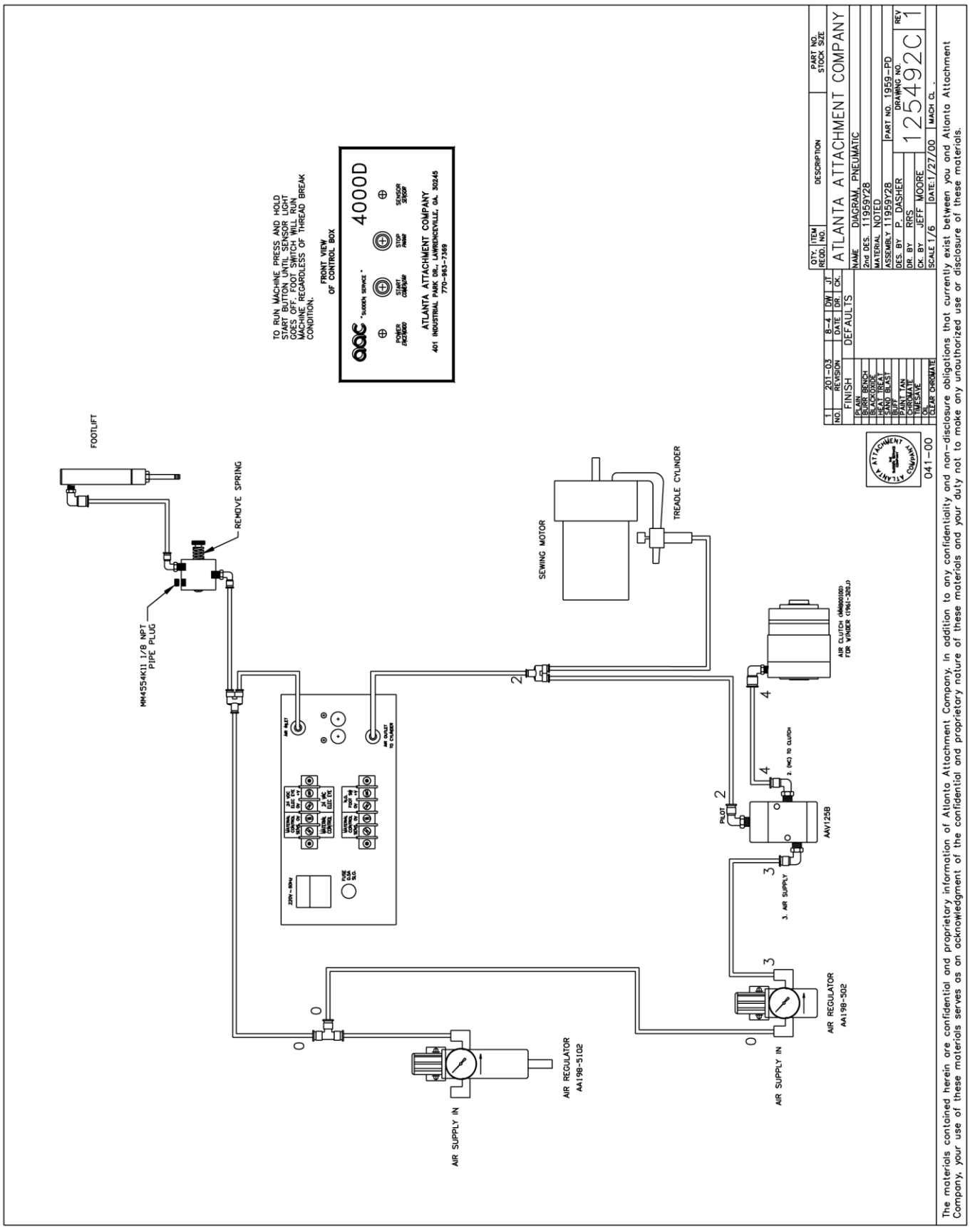

1335M-500WD Wiring Diagram, Control Box

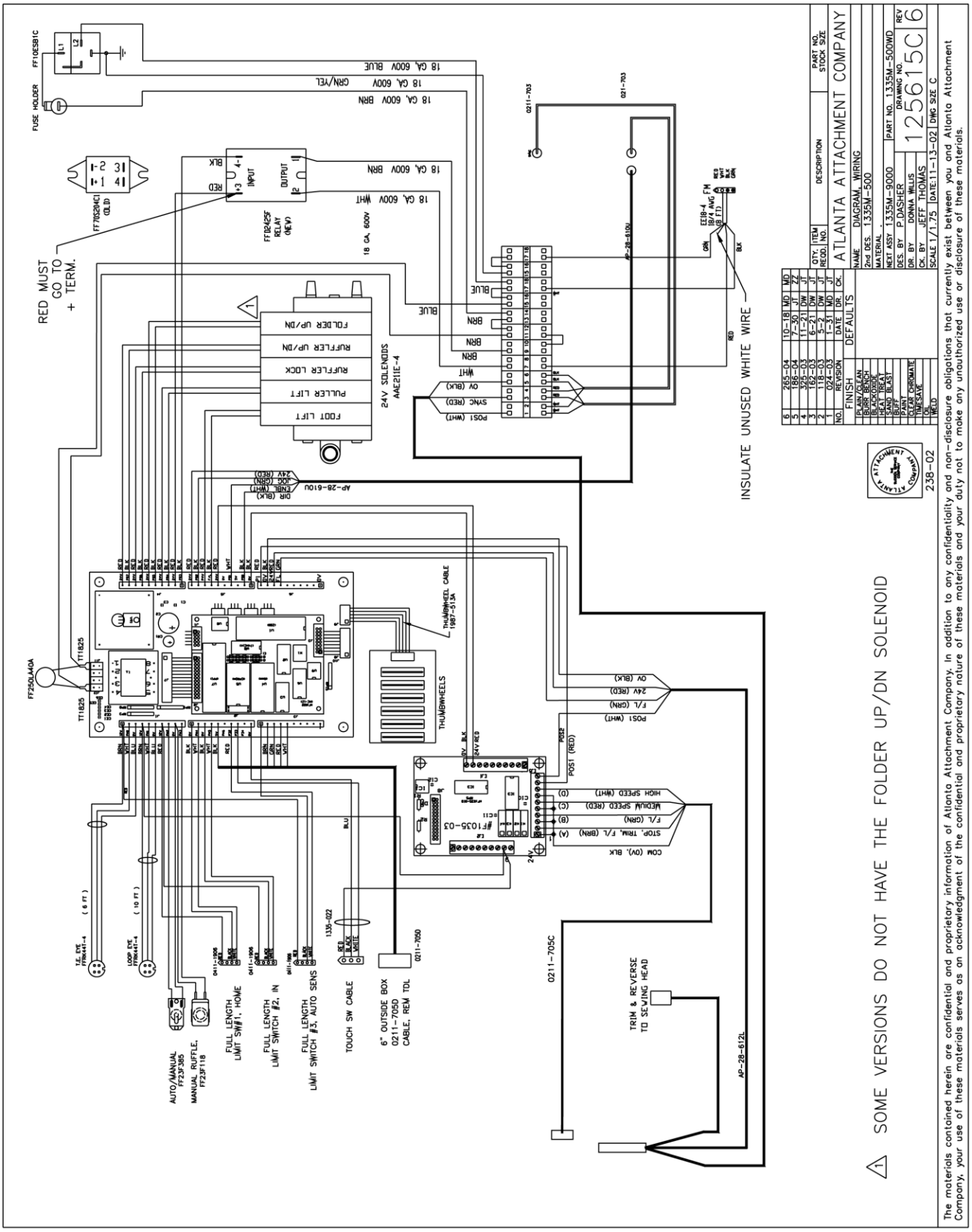

1335M-WD Wiring Diagram

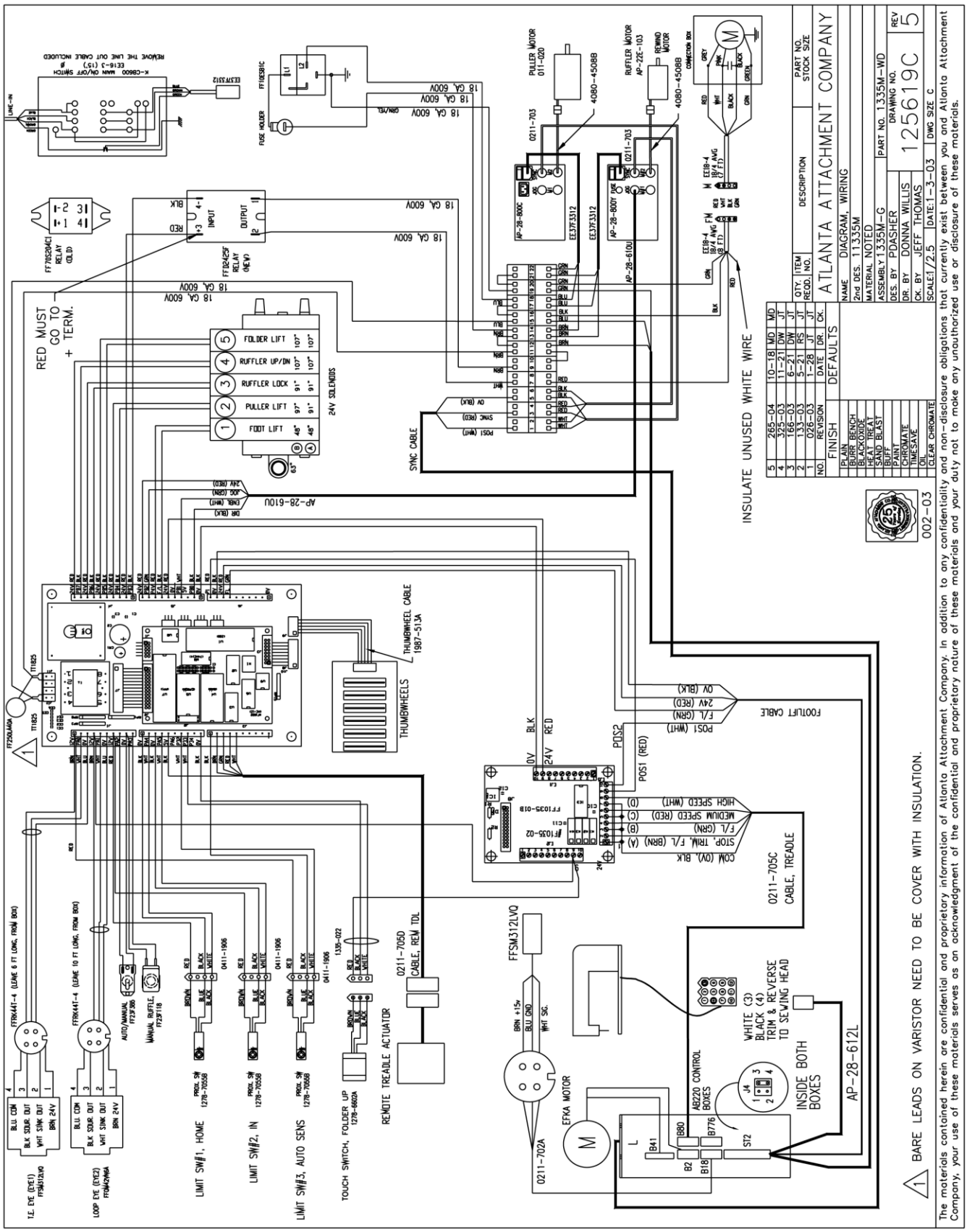

1335M-01WD Wiring Diagram

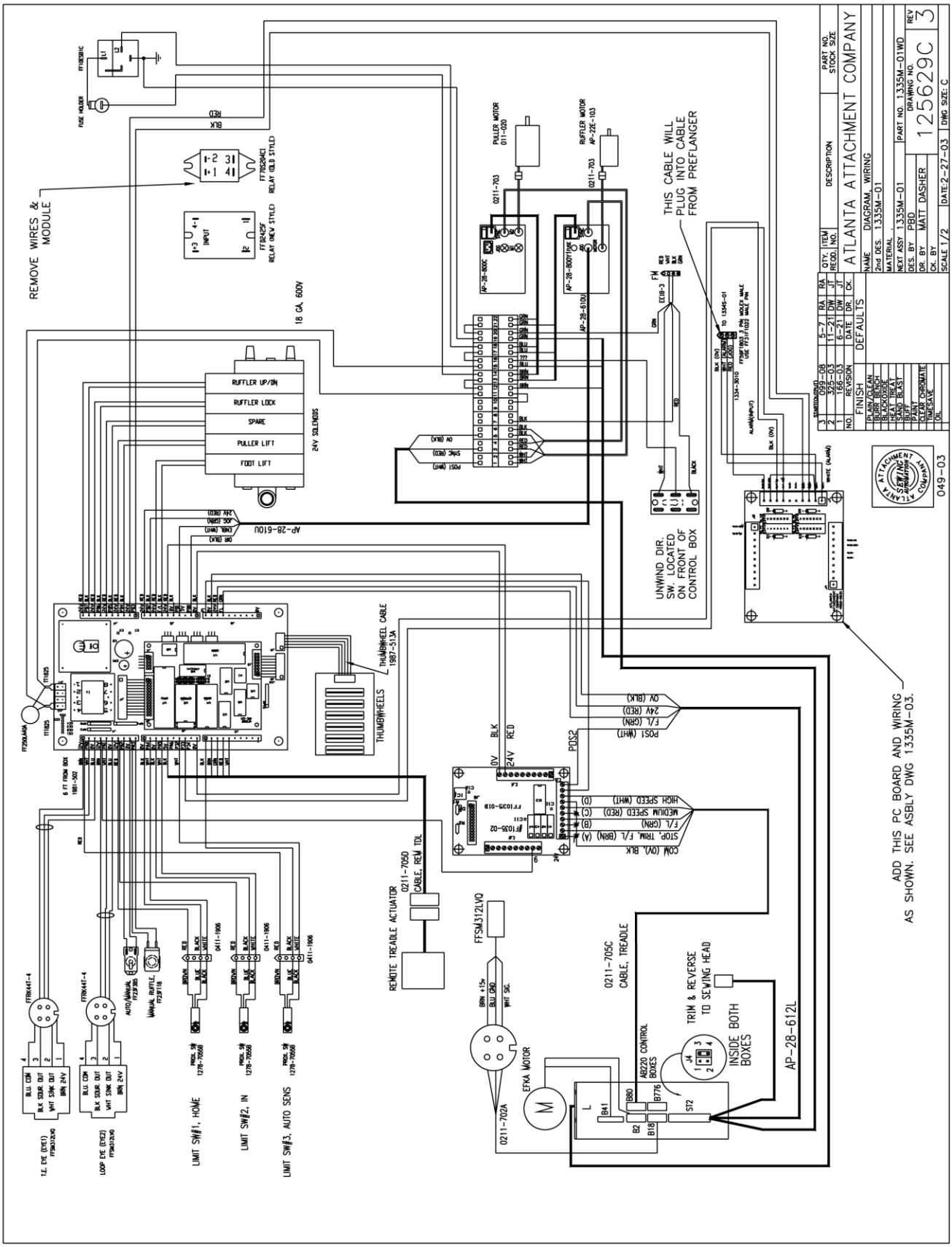

1334S-01WD Wiring Diagram, Flanging Unit

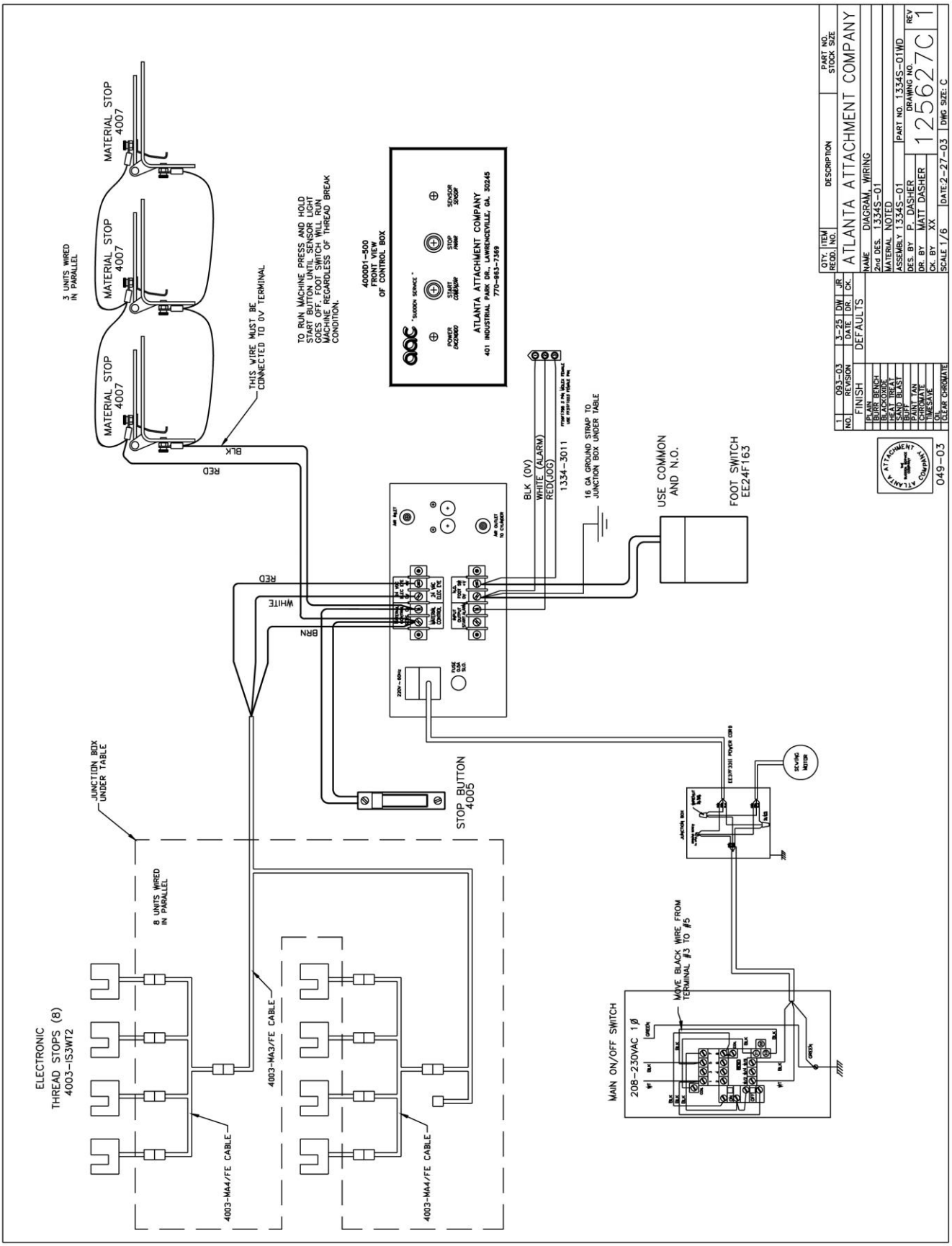

Atlanta Attachment Company (AAC) Statement of Warranty

Manufactured Products

Atlanta Attachment Company warrants manufactured products to be free from defects in material and workmanship for a period of eight hundred (800) hours of operation or one hundred (100) days whichever comes first. Atlanta Attachment Company warrants all electrical components of the Serial Bus System to be free from defects in material or workmanship for a period of thirty six (36) months.

Terms and Conditions:

- AAC Limited Warranty becomes effective on the date of shipment.
- AAC Warranty claims may be made by telephone, letter, fax or e-mail. All verbal claims must be confirmed in writing.
- AAC reserves the right to require the return of all claimed defective parts with a completed warranty claim form.
- AAC will, at its option, repair or replace the defective machine and parts upon return to AAC.
- AAC reserves the right to make the final decision on all warranty coverage questions.
- AAC warranty periods as stated are for eight hundred (800) hours or one hundred (100) days whichever comes first.
- AAC guarantees satisfactory operation of the machines on the basis of generally accepted industry standards, contingent upon proper application, installation and maintenance.
- AAC Limited Warranty may not be changed or modified and is not subject to any other warranty expressed or implied by any other agent, dealer, or distributor unless approved in writing by AAC in advance of any claim being filed.

What Is Covered

- Electrical components that are not included within the Serial Bus System that fail due to defects in material or workmanship, which are manufactured by AAC are covered for a period of eight hundred (800) hours.
- Mechanical parts or components that fail due to defects in material or workmanship, which are manufactured by AAC.
- Purchased items (sewing heads, motors, etc.) will be covered by the manufacturers (OEM) warranty.
- AAC will assist in the procurement and handling of the manufacturers (OEM) claim.

What Is Not Covered

- Parts that fail due to improper usage, lack of proper maintenance, lubrication and/or modification.
- Damages caused by; improper freight handling, accidents, fire and issues resulting from unauthorized service and/or personnel, improper electrical, plumbing connections.
- Normal wear of machine and parts such as Conveyor belts, "O" rings, gauge parts, cutters, needles, etc.
- Machine adjustments related to sewing applications and/or general machine operation.
- Charges for field service.
- Loss of time, potential revenue, and/or profits.
- Personal injury and/or property damage resulting from the operation of this equipment.

Declaración de Garantia

Productos Manufacturados

Atlanta Attachment Company garantiza que los productos de fabricación son libres de defectos de mate-rial y de mano de obra durante un periodo de ochocientos (800) horas de operación o cien (100) días cual llegue primero. Atlanta Attachment Company garantiza que todos los componentes del Serial bus son libres de defectos de material y de mano de obra durante un periodo de treinta y seis (36) meses.

Términos y Condiciones:

- La Garantía Limitada de AAC entra en efecto el día de transporte.
- Reclamos de la Garantía de AAC pueden ser realizados por teléfono, carta, fax o correo electrónico. Todo reclamo verbal tiene que ser confirmado vía escrito.
- AAC reserva el derecho para exigir el retorno de cada pieza defectuosa con un formulario de reclamo de garantía.
- AAC va, según su criterio, reparar o reemplazar las máquinas o piezas defectuosas devueltas para AAC.
- AAC reserva el derecho para tomar la decisión final sobre toda cuestión de garantía.
- Las garantías de AAC tiene una validez de ochocientas (800) horas o cien (100) días cual llega prim-ero.
- AAC garantiza la operación satisfactoria de sus máquinas en base de las normas aceptadas de la industria siempre y cuando se instale use y mantenga de forma apropiada.
- La garantía de AAC no puede ser cambiado o modificado y no está sujeto a cualquier otra garantía implicado por otro agente o distribuidor menos al menos que sea autorizado por AAC antes de cual-quier reclamo.

Lo Que Está Garantizado

- Componentes eléctricos que no están incluidos dentro del sistema Serial Bus que fallen por defectos de materiales o de fabricación que han sido manufacturados por AAC son garantizados por un peri-odo de ochocientas (800) horas.
- Componentes mecánicos que fallen por defectos de materiales o de fabricación que han sido manu-facturados por AAC son garantizados por un periodo de ochocientas (800) horas.
- Componentes comprados (Motores, Cabezales,) son protegidos debajo de la garantía del fabricante.
- AAC asistirá con el manejo de todo reclamo de garantía bajo la garantía del fabricante.

Lo Que No Está Garantizado

- Falla de repuestos al raíz de uso incorrecto, falta de mantenimiento, lubricación o modificación.
- Daños ocurridos a raíz de mal transporte, accidentes, incendios o cualquier daño como resultado de servicio por personas no autorizados o instalaciones incorrectas de conexiones eléctricas o neumáti-cas.
- Desgaste normal de piezas como correas, anillos de goma, cuchillas, agujas, etc.
- Ajustes de la máquina en relación a las aplicaciones de costura y/o la operación en general de la máquina.
- Gastos de Reparaciones fuera de las instalaciones de AAC
- Pérdida de tiempo, ingresos potenciales, y/o ganancias.
- Daños personales y/o daños a la propiedad como resultado de la operación de este equipo.

Atlanta Attachment Company
362 Industrial Park Drive
Lawrenceville, GA 30046
770-963-7369
www.atlatt.com

Printed in the USA